SILVER DAWN

SECTION Q

ELECTRICAL AND IGNITION SYSTEM

Comprising:-

GROUP 1. BATTERY AND HIGH AMPERAGE CABLE

2. DISTRIBUTION BOARD

3. JUNCTION BOXES

4. COIL AND HIGH TENSION LEADS

4A. INTERIOR COMPANION

5. STARTER MOTOR DRIVE

6. DYNAMO AND REGULATOR

7. ENGINE AND DASHBOARD EARTHS

8A. RADIATOR HEATER WINDSCREEN

9. HORN AND MOUNTING

10. INSTRUMENT AND MOUNTING

11. LAMPS AND MOUNTING

12. STARTER MOTOR

13. REAR NUMBER PLATE

13A. REAR NUMBER PLATE (U.S.A)

13B. REAR NUMBER PLATE (Switzerland)

13C. TAIL LIGHT SWITCH (Australia)

14. RADIO AND FITTINGS

14A. RADIO AND FITTINGS (Speaker mounted on steering column)

14B. RADIO SPARES

(Continued overleaf)

ELECTRICAL AND IGNITION SYSTEM: (Continued)

GROUP Q15. SWITCH BOX

16. SWITCHES SEPARATE

17. TRAFFICATOR

18. WINDSCREEN WIPER

19. DASHBOARD WIRING

20. WIRING LOW TENSION AND FITTINGS

21. BODY WIRING

KEY TO CHASSIS NUMBERS

Used on	LSBA	All chassis	
" "	LSCA	1-25	= F
" "	LSCA	27 onwards	= G
" "	LSBA	2-54	= H
" "	LSBA	56 onwards	= J
" "	LSBA	128 onwards	= Y
" "	LSBA	2-126	= L
" "	LSBA	All chassis	= M
" "	LSCA	1 onwards	= N
" "	SCA	27-59, 63 to end	
" "	SDB	2-4	= O
" "	SCA	61	
" "	SDB	6 onwards	= P
" "	SBA	All chassis	
" "	SCA	1-9	= Q

(Continued overleaf)

Key to Chassis Numbers: (Continued)

Used on		SCA	11 onwards	= R
"	"	SCA	11-59, 63 to end	
"	"	SDB	2-4	= S
"	"		A, B & C Series	
"	"	SHD	2-14, 18-26, 30, 34, 38, 46, 48, 50, 54	= T
"	"	SHD	16, 28, 32, 36, 40-44, 52, 56 onwards.	= U
"	"		A & B Series	
"	"	SFC	2-92	= V
"	"	SFC	94 onwards	= W
"	"		A & B Series	
"	"	SFC	100, 118-124	= X
"	"	SFC	102-116, 126-160	
"	"	SHD	2 onwards	= Y
"	"	SBA	All chassis	
"	"	SCA	1-49	= Z
"	"	SCA	51 onwards	= FF
"	"	SCA	51-59, 63	
"	"	SDB	2 and 4	= GG
"	"	SCA	61	
"	"	SDB	6 onwards	= HH

GROUP Q.1. BATTERY AND HIGH AMPERAGE CABLES.

Comprising

	REF. NO.	PART NO.	QUANTITY GROUP	QUANTITY ASS'LY	NOTES
BATTERY, 12 volt, assembly, consisting of	1	RD.4358	1		
Battery, Exide, 6MXP-9R or P & R 6HZP 9S		DB.2063		1	
Nut, battery retaining stud		RD.4357		2	
Stud, battery, retaining		RD.4356		2	
BOLT, cable clips	X. 9	K.103/Z	5		
BOLT, .250" dia., battery earth to frame	X.10	K.204/Z	1		
BOLT, .250" dia., Solenoid mounting strip to valance plate (LC)	X.10	K.243/Z	2		
CABLE, battery to earth, assembly, consisting of	2	RD.3593	1		
Cable				1	
Eye, angle, frame		D 50650		2	
Sleeve, rubber		RD.3305		2	
Terminal, positive to battery		F.56725		1	
CABLE, battery, to Solenoid switch assembly(RC) consisting of:	3	RD.3591	1		
Cable					
Eye, straight Solenoid switch		RD.3102		1	
Sleeve, rubber		RD.3305		1	
Terminal, negative to battery		F.56724		1	
CABLE, battery to Solenoid switch assembly (LC) consisting of		RD.5005	1		
Cable					
Eye, straight, Solenoid switch		RD.3102		1	
Sleeve, rubber		RD.3305		1	
Terminal, negative to battery		F.56724		1	
CABLE, switch to starter, assembly, consisting of	4	RD.3592	1		
Cable				1	
Eye, angle, starter motor end		D.50650		1	
Eye, straight, switch end		RD.3102		1	
Sleeve, rubber		RD.3305		1	
CLIP	5	RD.3041			
COVER, terminal, rubber, large dia.	6	RD.3105	2		
COVER, terminal, rubber, small dia.	7	RD.3106	1		
NUT, .250" dia., Solenoid mounting strip to valance plate (LC)		K.4310/Z	2		
NUT, full, .250" dia., battery earth bolt		K.4008/Z	1		
NUT, full, 2 BA, cable clips	X.21	K.4006/Z	5		
NUT, full, .250" dia., battery terminal screw	X.21	K.4008	2		+
PIECE, distance	9	RD.3099	2		
SCREW, hexagon head, .250" dia., battery terminal	X.55	KC.209/Z	2		+
SCREW, hexagon head, .250" dia., switch retaining	X.55	KC.902/N	2		F
SCREW, hexagon head, 2 BA, switch retaining	X.54	KC.172/Z	2		G
STRIP, mounting Solenoid, assembly (LC)	8	RF.7190	1		G
STRIP, mounting Solenoid, assembly (LC)		RD.5030	1		F
SLEEVING, cable battery to switch	10	RD.3089	1		
SLEEVING, cable switch to starter	11	RD.5459	1		
SWITCH, Solenoid assembly, with terminal nuts and washers		RD.3009	1		F

GROUP Q.1. (Continued overleaf)

GROUP Q1. BATTERY AND HIGH AMPERAGE CABLES (Continued)

	REF. NO.	PART NO.	QUANTITY GROUP	QUANTITY ASS'LY	NOTES
SWITCH, Solenoid, assembly with terminal nuts and washers	12	RD 5518	1		G
WASHER, plain, .250" dia., battery earth bolt	X.85	K 4407/Z	1		
WASHER, plain, Solenoid mounting strip to valance plate (LC)		K 4407/Z	2		
WASHER, plain, 2 BA, switch to mounting strip	X.85	K 4404/Z	2		G
WASHER, spring, .250" dia., battery earth bolt	X.87	K 9008/Z	1		
WASHER, spring, .250" dia., switch to mounting strip	X.87	K 9008/Z	2		F
WASHER, spring, 2 BA, cable clips	X.87	K. 9006/Z	5		
WASHER, spring, 2 BA, switch to mounting strip	X.87	K 9006/Z	2		G
WASHER, spring, Solenoid mounting strip to valance plate (LC)		K 9008/Z	2		

NOTE:- + Specify 'electro-lead deposited' when ordering.

GROUP Q2. BOARD DISTRIBUTION

Comprising

BASE, assembly, consisting of	1	RD 3031A	1	
Base		RD 3031		1
Bolt, fuse terminal		DW 434		16
Clip, fuse		RD 3034		14
Plate, connecting main fuse		RD 3035		2
Rivet, .093" dia., fuse clip retaining		KB 1823		14
Washer, plain, fuse clip retaining rivet		RD 3036		14
CLAMP, main fuse	2	DW 538	2	
CLIP, cover retaining	3	RD 3033	1	
COVER	4	RD 3032	1	
FUSE, main 3 strands of .0124 (30 SWG) tinned copper twisted together (4 ft. total length)	5			
HOLDER, fuse assembly, consisting of	6	RD 3686A	7	
Contact		D 76011		2
Holder		RD 3686		1
Wire, fuse (as in main fuse)				
HOLDER, spare wire, assembly, consisting of	7	DW 432A	1	
Holder		DW 432		1
Wire, fuse (as in main fuse)				
NUT, half, 3 BA, terminal and terminal bolt retaining	X.24	K 4304/Z	32	
PIECE, distance, main fuse	8	D 74845	2	
PIECE, distance, distribution board base		RD 5906	1	
SCREW, cheesehead, 3 BA, board to dashboard retaining	X.45	K 1834/Z	3	
SCREW, cheesehead, 3 BA, main fuse distance piece retaining	9	D 71723	2	
SCREW, cheesehead, 3 BA, main fuse distance piece retaining	X.45	K 1807/Z	2	

GROUP Q2. (Continued overleaf)

GROUP Q2. BOARD DISTRIBUTION (Continued)

	REF. NO.	PART NO.	QUANTITY GROUP ASS'LY	NOTES
WASHER, plain, 3 BA, board to dashboard retaining screw	X.85	K 4446/Z	3	
WASHER, plain, 3 BA, terminal bolt and main fuse screw	X.85	K 4447/Z	34	
WASHER, spring, 3 BA, board to dashboard retaining screw	X.87	K 9005/Z	3	
WASHER, spring, 3 BA, terminal bolt, main fuse screw and distance piece	X.87	K 9005/Z	36	

GROUP Q3. BOXES JUNCTION

Comprising

BOX, junction, 4 way, assembly, with cover, cover screw and grub screws	1	RD 3085	3	
BOX, junction, 6 way, assembly with cover, cover screws, terminals and grub screws (RC)	2	RD 3086	3	
BOX, junction, 6 way, assembly with cover, cover screw, terminals and grub screws (LC)		RD 3086	4	
BOX, junction, 12 way, assembly, consisting of	3	RD 3306A	1	
Base		RD 3306		1
Screw, terminal		RD 3309		12
Terminal		RD 3308		12
BRACKET, mounting coachbuilder's junction box on dashboard	4	RD 3098	1	
COVER, 12 way junction box		RD 3307	1	
NUT, full, 3 BA, 4 and 6 way junction boxes retaining screws (RC)	X.21	K 4005/Z	8	
NUT, full, 3 BA, 4 and 6 way junction boxes retaining screws (LC)		K 4005/Z	10	
NUT, half, 3 BA, tail box retaining screw	X.24	K 4304/Z	2	
PIECE, distance, coachbuilders, junction box on dashboard	6	RD 3099	2	
SCREW, cheesehead, 3 BA, junction box retaining (RC)	X.45	K 1807/Z	8	
SCREW, cheesehead, 3 BA, junction box retaining (LC)		K 1807/Z	10	
SCREW, cheesehead, 3 BA, 12 way junction box cover retaining	X.45	K 1814/Z	3	
SCREW, cheesehead, 2 BA, coachbuilder's junction box bracket, on dashboard, retaining	X.46	K 1928/Z	2	
SCREW, 12 way junction box on dashboard, retaining	7	RD 3310	3	
WASHER, plain, 3 BA, junction box, retaining screw	X.85	K 4446/Z	7	
WASHER, spring, 3 BA, junction box and 12 way box cover, retaining screw (RC)		K 9005/Z	14	
WASHER, spring, 3 BA, junction box and 12 way box cover, retaining screw (LC)		K 9005/Z	16	
WASHER, spring, 2 BA, coachbuilder's junction box on dashboard, retaining screw	X.87	K 9006/Z		

GROUP Q4. COIL DISTRIBUTOR AND HIGH TENSION LEADS

Comprising

	REF. NO.	PART NO.	QUANTITY GROUP	QUANTITY ASS'LY	NOTES
ADAPTOR, lead to plug (Champion) assembly with bush clip and screw	1	RE 3482A	6		A
ADAPTOR, lead to plug (Lodge)		RE 5925	6		A
BOLT, bracket to dash		KC 902/Z	2		
BOLT, coil to bracket		K 203/Z	4		
BRACKET, ignition coil		RD 4726	1		
COIL, ignition, assembly, including cable cap and 2 BA, terminal nuts (1 off on early chassis)	2	RD 3012	2		
CONDENSER, coil, assembly, consisting of	3	RD 4031	1		
Condenser with cable		RD 3410		1	
CONDUIT, front assembly, consisting of	4	RE 5469	1		
Bracket		RE 4781		1	
Eyelet		RE 652		3	
Tube		RE 5468		1	
CONDUIT, rear assembly, consisting of	5	RE 4778	1		
Bracket		RE 4781		1	
Eyelet		RE 652		3	
Tube		RE 644		1	
DISTRIBUTOR, assembly, including	6	RD 5897	1		V
Distributor		RD 5896		1	
Cap, distributor		RD 7616		1	
Condenser, assembly, (including condenser RD.5881)		RD 4481		1	
Contact fixed base plate		RD 4269		1	
Contact fixed synchro plate		RD 4270		1	
Contact, moving with bush spring and pad				2	
Cover, distributor				1	
Nut, knurled		RD 3703		1	
Rotor				1	
Lubricator		RE 10606			
Plate, clamping		RD 7565		1	
Pin, taper, driven sleeve		K 4802		1	
Sleeve, driven		RD 3494		1	
Washer, packing for clamping plate		RD 3046		1	
DISTRIBUTOR, assembly, as above except					W
Distributor body and bracket condenser		RD 7773		1	
Condenser		RD 7774		2	
Nut, condenser to bracket		K 4301/Z		4	
Screw, condenser to bracket		K 1750/Z		4	
Washer, condenser to bracket		K 9003/Z		4	
LEAD, H.T. coil to distributor	7	RE 3466			
LEAD, H.T. coil 2 and 5 cylinders (Champion)	8	RE 3462			
LEAD, H.T. coil 2 and 5 cylinders (Lodge)		RE 9207			
LEAD, H.T. No.3 cylinders (Champion)	9	RE 3463			

GROUP Q4. (Continued overleaf)

GROUP Q4. DISTRIBUTOR AND HIGH TENSION LEADS (Continued)

	REF. NO.	PART NO.	QUANTITY GROUP	QUANTITY ASS'LY	NOTES
LEAD, H.T. No. 3 cylinder (Lodge)		RE 9207			
LEAD, H.T. No. 4 cylinder (Champion)	10	RE 3464			
LEAD, H.T. No. 4 cylinder (Lodge)		RE 9209			
LEAD, H.T. No. 6 cylinder (Champion)	11	RE 3465			
LEAD, H.T. No. 6 cylinder (Lodge)		RE 9210			
NUT, coil to bracket		K 4310/Z	4		
PLATE, driving sleeve distributor	13	RD 3492	4		
PLUG, sparking 14 mm Lodge 'CLN'	14	RE 4912	6		
PLUG, sparking 14 mm Champion		RE 4568	6		
RING, driving plate, distributor retaining	15	RD 3493	1		
WASHER, FS, coil to bracket		K 9008/Z	4		
WASHER, FS, bracket to dash		K 9008/Z	2		

GROUP Q4A. COMPANION INTERIOR

Comprising

BRACKET, cigar lighter		KB 3991	1		
BULB, 16 v 3w MES capped		RD 4242	2		
COVER, terminal lamp		RD 3357	2		
HOLDER, bulb		RD 3353	2		
LIGHTER, cigar interior companion with		RD 4835	1		
Knob and element		RD 6205		1	
Socket		RD 7612		1	
NUT, lock, 3 BA, lamp mounting	X.24	K 4304/Z	4		
SCREW, No.2 lighter to bracket		KB 4763	3		
SCREW, 3 BA, lamp mounting	X.49	K 2713/Z	4		
SWITCH, see-saw		RD 3572	2		
TAB, earthing		RD 4030			

GROUP Q5. DRIVE STARTER MOTOR

Comprising

BEARING, ball, Fischer	1	RD 7530	1		A
BEARING, ball, Hoffman		RD 3958	1		A
BEARING, ball, Ransom and Marle		RD 5793	1		A
COVER, clutch	2	DB 366	1		
CUP, outer clutch plate retaining	3	RD 3728	1		
DISC, clutch, Ferodo	4	RD 3726	7		
DISC, clutch with Spigot	5	RD 3727	3		
DISC, clutch without Spigot	6	D 51584	3		
GEAR, pinion, assembly, consisting of	7	DB 1185A	1		
Bush		DB 1186		1	
Flange		D 50883		1	
Gear		DB 1185		1	
KEY, Woodruff, .500" dia., x .0935 thick stop	X.18	KC 500	1		A
NUT, ball bearing retaining	8	G 8753	1		
NUT, operating, splined	9	DB 2271	1		

GROUP Q5. (Continued overleaf)

GROUP Q5. DRIVE STARTER MOTOR (Continued)

PLATE, clutch inner	10	DB 1676	1
PLATE, clutch outer	11	D 51585	1
RING, locking, cover to shell	12	D 50911	1
RING, spring, (circular section) damper spring washer retaining	13	D 51139	1
RING, spring, (square section) outer clutch plate retaining	14	D 72370	1
SHAFT, threaded	15	DB 2307	1
SHELL, driving	16	D 54612	1
SPRING, damper	17	DB 81	1
SPRING, disengaging	18	DB 2098	1
SPRING, engaging (12 lbs)	19	D 51566	1
STOP, operating	20	DB 1674	1
WASHER, damper spring retaining	21	DB 1675	1
WASHER, fibre, outer plate to cover	22	D 51589	1
WASHER, fibre, pinion to shell	23	D 50908	1
WASHER, lock, ball bearing retaining nut	24	D 51590	1
WASHER, plain, ball bearing retaining	X.85	K 4419	1

GROUP Q6. DYNAMO AND REGULATOR

Comprising

DYNAMO, 5", Lucas RA.5, assembly, including	1	RD 3679	
Bearing		RD 6204	
Brush set (2 off per set)		RD 6158	
Screw, adjuster		RD 6236	
Spring set brush		RD 6244	
PULLEY, with cooling fan	2	RD 4067	
REGULATOR, 5" dynamo, Lucas RF.965/L10 assembly	3	RE 10621	
SCREW, cheesehead, 2 BA, voltage control to dashboard retaining	X.46	K 1928/Z	
WASHER, plain, 2 BA, regulator to dashboard retaining screw	X.85	K 4404/Z	
WASHER, spring, 2 BA, regulator to dashboard retaining screw	X.87	K 9006/Z	

GROUP Q7. EARTH, ENGINE AND DASHBOARD

Comprising

BOLT, .250" dia., cables to frame retaining	X.10	K 241/Z	1
CABLE, earthing, dashboard	1	RD 3604	1
CABLE, earthing, engine assembly, consisting of	2	RD 3594	1
Cable, 8.250" long, double copper braid (tinned)		D 54573	1
Eye		RD 3532	2
NUT, half, 3 BA, earth terminal to dashboard	X.24	K 4304/Z	2
NUT, half, .250" dia., cables to frame retaining bolt	X.24	K 4310/Z	1

GROUP Q7. (Continued overleaf)

GROUP Q7. EARTH, ENGINE AND DASHBOARD (Continued)

	REF. NO.	PART NO.	QUANTITY GROUP	QUANTITY ASS'LY	NOTES
SCREW, cheesehead, 3 BA, earth terminal	X.45	K 1813/Z		2	
WASHER, plain, 3 BA, earth terminal	X.85	K 4446/Z		1	
WASHER, spring, 3 BA, earth terminal	X.87	K 9005/Z		1	
WASHER, spring, .250" dia., cables to frame retaining bolt	X.87	K 9008/Z		1	

GROUP Q8A. RADIATOR HEATER WINDSCREEN

Comprising

BLOWER, motor demister	1	RD 4980		1	Z
BLOWER, motor demister	2	RD 5940		1	FF
BOLT, mounting pad to blower	X.10	K 206/Z		3	Z
BOLT, mounting pad to support bracket	X.10	K 209/Z		3	Z
BUSH, mounting pad demister blower (long)	3	RD 5317		3	Z
BUSH, mounting pad demister blower (short)	4	RD 5318		3	Z
BRACKET, support demister blower	5	RD 4725		1	Z
CLIP, No. 2, connection, demister blower	6	RD 4994		1	Z
CLIP, No. 2, duct to demister elbow		RD 4994		1	Z
CLIP, No. 2X, demister pipe		RE 8936		4	FF
CLIP, No. 2, hose - air silencer		RD 4907		2	
CLIP, No. 3, connection pipe - blower	7	RE 6739		2	FF
CLIP, No. 3, radiator duct to transfer duct		RE 6739		2	Z
CLIP, motor leads	8	RD 5161		1	FF
CONNECTION, rubber, demister blower	9	RD 4730		1	Z
CONNECTION, rubber, radiator duct to transfer duct	10	RD 4970		1	Z
CONNECTION, rubber, demister silencer to breeches pin	11	RD 3366		2	
CONNECTION, rubber, body duct to silencer	12	RD 3426		2	
CONNECTION, rubber, transfer duct	13	RD 6071		2	FF
CONNECTION, rubber, blower motor to connection pipe	14	RD 5942		1	FF
CONNECTION, elbow, blower	15	RD 4906		1	Z
CONNECTION, elbow, blower	16	RD 5944		1	FF
DUCT, air demister assembly, complete with	17	RD 5002		1	Z
Clip, air duct support		RE 6783		2	
Nut, strap square		CS 30981/Z		1	
Pin, split	X.31	KB 6868		2	
Screw, set, duct support clip		KC 172/Z		2	
Screw, cheesehead, strap		K 1925/Z		1	
Strap, duct support, assembly		RD 6104		2	
Strip, packing, felt, connecting strap		RD 6103		2	
Strip, packing, felt, air duct		RD 7434		1	
Washer, F.S. support clip	X.87	K 9006/Z		2	
Washer, F.S. strap	X.87	K 9006/Z		1	
Washer, Thackeray, connecting strap	X.90	K 3803/Z		1	
DUCT, air, demister assembly, complete as above except for duct		RD 5924A		1	GG
DUCT, air, demister assembly, including (dividing plate fitted)	18	RD 5924B		1	HH
Seal, felt, dividing plate		RD 5945		1	
DUCT, air transfer, assembly	19	RD 5315		1	Z

GROUP Q8A. (Continued overleaf)

GROUP Q8A. RADIATOR HEATER WINDSCREEN (Continued)

	REF. NO.	PART NO.	QUANTITY GROUP	QUANTITY ASS'LY	NOTES
DUCT, air, front assembly	20	RD 5930	1		HH
Felt, .062 thick - air duct to matrix		RD 5935		1	
Felt, .125 thick, air duct		RD 5936		1	
FLANGE, elbow demister	21	RD 5946	1		FF
NUT, front air duct to top tank	X.24	K 4307/Z	2		FF
NUT, mounting pad to support bracket	X.24	K 4310/Z	3		Z
NUT, pad to blower	X.24	K 4310/Z	3		Z
PIPE, breeches assembly with flange	22	RD 4575	1		
PIPE, blower to duct	23	RD 5939	1		FF
PIPE, blower to connection to dash	24	RD 5941	1		FF
PAD, mounting, demister blower	25	RD 4729	1		Z
SILENCER, blower, demister	26	RD 4570	2		
SCREW, adjusting plate to air duct	X.46	K 1910/Z	4		Z
SCREW, cheesehead, connection to dash	X.46	K 1910/Z	4		Z
SCREW, cheesehead, breeches pipe to dash	X.46	K 1910/Z	4		FF
SCREW, set, support bracket to dash	X.55	KC 902/Z	4		Z
SCREW, set, front air duct to top tank	X.54	KC 152/Z	2		FF
SCREW, set, dashboard - sealing	X.55	KC 902/Z	4		FF
WASHER, plain, pad to blower	X.85	K 4407/Z	3		Z
WASHER, plain, front air duct to top tank	X.85	K 4404/Z	4		FF
WASHER, plain, mounting pad to support bracket	X.85	K 4407/Z	3		Z
WASHER, spring, pad to blower	X.87	K 9008/Z	3		Z
WASHER, spring, support bracket to dash	X.87	K 9008/Z	4		Z
WASHER, spring, connection to dash	X.87	K 9007/Z	4		Z
WASHER, spring, dashboard sealing	X.87	K 9008/Z	4		FF
WASHER, spring, pad to support bracket	X.87	K 9008/Z	3		Z
WASHER, F.S. front air duct to top tank	X.87	K 9006/Z	2		FF
WASHER, F.S. adjusting plate to air duct	X.87	K 9006/Z	4		Z
WASHER, F.S. breeches piece to duct	X.87	K 9006/Z	4		FF

GROUP Q9. HORN AND MOUNTING

Comprising

BOLT, .312" dia., mounting bracket retaining	X. 6	K 304/Z	4		
BOLT, 2 BA, horn relay bracket to valance plate		K 101/Z	2		J
BRACKET, fixing	1	RD 3207	2		
BRACKET, horn mounting	2	RD 4950	2		
BRACKET, horn relay mounting		RD 6352	1		J
CONNECTOR, horn cables	3	RD 3425	4		
COVER, terminal		RD 3106	3		J
GRILLE, horn, assembly, consisting of	4	RD 3254A	2		
Grille		RD 3254		1	
Stud, 2 BA		RD 6026		4	
HORN, WT.29 low note, R.H. assembly, including	5	RD 3206	1		
Block, terminal, complete with fixing parts		RD 4450			
Contact, set complete with fixing parts		RD 4451			
Cover, rear		RD 4453			
Flex		RD 4452			
Grommet		RD 4455			

GROUP Q9. (Continued overleaf)

GROUP Q9. HORN AND MOUNTING (Continued)

HORN, WT.29 low note, R.H. assembly, including (Continued)

	REF. NO.	PART NO.	QUANTITY GROUP	QUANTITY ASS'LY	NOTES
Housing, complete with bridge, core resistance, terminal and contact breaker		RD 4449			
Support, cover fixing		RD 4454			
HORN, WT.29, high note, L.H. assembly as above, except		RD 4265		1	
Housing		RD 4456			
NUT, full, 2 BA, relay retaining	X.21	K 4006/Z		2	H
NUT, half, 2 BA, horn grille, retaining	X.24	K 4307/Z		8	
NUT, half, 2 BA, horn relay bracket to valance plate		K 4307/Z		2	
NUT, half, .312" dia., horn mounting	X.24	K 4313/Z		4	
RELAY, Lucas, 12 volt	6	RD 3084		1	H
RELAY, Lucas, 12 volt		RD 6351		1	J
SCREW, cheesehead, 2 BA, horn relay retaining	X.45	K 1749/Z		2	H
SCREW, hexagon head, .312" dia., horn mounting	X.56	K 6296/Z		4	
SCREW, cheesehead, 2 BA, horn relay to bracket		K 1901/Z		2	J
WASHER, joint, horn grille	7	RD 3225		8	
WASHER, plain, .312" dia., horn mounting	X.85	K 4410/Z		8	
WASHER, spring, 2 BA, grille and relay	X.87	K 9006/Z		10	H
WASHER, spring, 2 BA, grille	X.87	K 9006/Z		8	J
WASHER, spring, 2 BA, relay to bracket	X.87	K 9006/Z		2	J
WASHER, spring, 2 BA, relay bracket to valance	X.87	K 9006/Z		2	J
WASHER, spring, .312" dia., horn mounting	X.87	K 9009/Z		8	

GROUP Q10. INSTRUMENTS AND MOUNTING

Comprising

AMMETER, assembly, with 12v x 2.4w bulb	1	RD 4676		1	
BLOCK, mounting speedometer cable clips	2	RD 5101		2	
BOLT, 2 BA, speedometer drive clip, frame	X. 9	K 102/Z		2	
BOLT, 2 BA, sleeving to plate retaining		K 102/Z		1	
BULB, 12v x 2.4w screw fixing	3	RD 4243		6	
CABLE, light, to switch and speedometer		RD 4839		2	
CLIP, thermometer tube induction pipe	7	RD 3508		4	
CLIP, thermometer tube dash	8	RF 3291		1	
CLIP, speedo drive frame	5	RD 4782		1	
CLIP, speedo drive dashboard	6	RD 3193		2	
CLOCK, electric with, 12v x 2.4w bulb	9	RD 7170		1	
CONNECTOR, terminal plug charging point		D 70396		2	
DRIVE, speedometer assembly, with fixing nuts (RC)	10	RD 4590		1	
DRIVE, speedometer assembly, with fixing nuts (RC) as above, but felt washer fitted in knurled nut		RD 5419		1	
DRIVE, speedometer assembly, with fixing nuts (LC)		RD 4746		1	
DRIVE, speedometer assembly, with fixing nuts (LC) as above, but felt washer fitted to knurled nut		RD 5280		1	
GAUGE, fuel/oil level with 12v x 2.4w bulb	11	RD 3443		1	
GAUGE, oil pressure and water thermometer, with 12v x 2.4w bulb	12	RD 3331		1	

GROUP Q10. (Continued overleaf)

GROUP Q10. INSTRUMENTS AND MOUNTING (Continued)

	REF. NO.	PART NO.	QUANTITY GROUP	QUANTITY ASS'LY	NOTES
LIGHT, fuel warning assembly, consisting of	13	RD 3158A	1		
Bulb, 16v 3w servo fixing		RD 4242		1	
Holder bulb		RD 3115		1	
Housing		RD 4181		1	
Spring		RD 3117		1	
Screw, wood, No. 2, round head		RD 4836		2	
Tube, screen warning light		RD 4182		1	
Washer, holder to mounting plate		RD 3116		1	
Window green		RD 3453		1	
LIGHT, ignition warning, as above except		RD 3158B	1		
Window red		RD 3452		1	
LIGHTER, cigar assembly	14	RD 4157	1		
Knob, and element cigar lighter		RD 7613		1	
Socket		RD 7614		1	
NUT, 2 BA, clip speedo drive frame	X.24	K 4307/Z	2		
NUT, 2 BA, P.V.C. sleeving to mounting plate	X.24	K 4307/Z	1		
PACKING, clip speedo drive frame	15	RD 4783	1		
PLUG, moulded charging point	18	RD 4333	1		
PLATE, mounting assembly, with nuts instrument		RD 3303	1		X
PLATE, mounting assembly, with nuts instrument	16	RD 6727	1		Y
PLATE, backing therm and tube dash		DB 1832	1		
PLATE, backing shield speedometer drive	17	DB 1832	1		
PLATE, retaining - window - light warning		RD 3171	2		
RHEOSTAT, underseat heater		RD 3441	1		X
SCREW, cheesehead, 5 BA, speedometer drive shield retaining	X.44	K 1707/Z	4		
SCREW, cheesehead, 3 BA, charging point terminal socket	X.45	K 1804/Z	2		
SCREW, cheesehead, 3 BA, speedometer drive dash	X.45	K 1831/Z	4		
SCREW, cheesehead, 5 BA, thermometer tube dash	X.44	K 1704/Z	1		
SCREW, cheesehead, 2 BA, mounting instruments	X.46	K 1907/Z	11		
SCREW, cheesehead, 2 BA, instrument plate retaining	X.54	KC 153/Z	6		
SCREW, wood, No. 6, charging socket to facia		CS 31604/Z	2		
SCREW, cheesehead, 5 BA, shield thermometer	X.44	K 1707/Z	4		
SHIELD, speedometer drive dashboard	19	RD 3186	1		
SHIELD, thermometer tube dash		RB 1830			
SOCKET, plug, charging point	20	RD 7056	1		
SPEEDOMETER, miles		RD 5365	1		
SPEEDOMETER, miles (as RD.5365 but felt washer is fitted in drive)	21	RD 5468	1		
SPEEDOMETER, miles and kilos		RD 5359	1		
SPEEDOMETER, miles and kilos (as RD.5359 but felt washer is fitted in drive)		RD 5486	1		
SWITCH, map reading lamp including, nuts washers and terminals	28	RD 3135	1		
SWITCH, fuel oil level including nuts washers and terminals	26	RD 3133	1		
SWITCH, pull on, pull off fog lamps	27	RD 4966	1		

GROUP Q10. (Continued overleaf)

GROUP Q10. INSTRUMENTS AND MOUNTING (Continued)

	REF. NO.	PART NO.	QUANTITY GROUP	QUANTITY ASS'LY	NOTES
SWITCH, pull on, push off demister		RD.4962		1	X
SWITCH, 3 position demister	22	RD.6692		1	Y
SWITCH, pull on, push off, instrument lights	23	RD.4961		1	
SWITCH, pull on, push off, windscreen wiper	25	RD.4963		1	
SWITCH, 3 position heater	24	RD.6694		1	Y
WASHER, F.S. 2 BA, clip speedo drive frame		K.9006/Z		2	
WASHER, F.S. 3 BA, speedo drive dash		K.9005/Z		4	
WASHER, F.S. 5 BA, shield speedo drive		K.9003/Z		4	
WASHER, F.S. 5 BA, shield thermometer tube		K.9003/Z		4	
WASHER, F.S. 5 BA, thermometer tube to dash		K.9003/Z		1	
WASHER, F.S. 2 BA, mounting instruments		K.9006/Z		11	
WASHER, F.S. 2 BA, mounting plate		K.9006/Z		6	
WASHER, F.S. 3 BA, charging point socket terminal		K.9005/Z		2	
WASHER, gauge oil pressure (leather)		RD.4345		1	
WASHER, plain, 2 BA, PVC, sleeving to mounting plate		K.4404/Z		1	
WASHER, plain, 3 BA, charging point terminal socket		K.4446/Z		2	

GROUP Q11 LAMPS ANDMOUNTING

Comprising

BRACKET, assembly, support fog lamp	1	RF.9566		2	
BRACKET, assembly, fog lamp mounting bracket, RH	2	RF.9578		1	
BRACKET, assembly, fog lamp mounting bracket, LH		RF.9579		1	
CASING, stop tail lamp, RH complete with studs	3	RD.3535/A		1	
CASING, stop tail lamp, LH complete with studs		RD.3536/A		1	
COVER, support, bracket fog lamp	4	RD.5178		2	
LAMP, inspection, assembly, consisting of	5	RD.5454		1	
Bulb, 12v 6w SBC		RD.4518			1
Cable		RD.4351			1
Casing		RD.4865			1
Clip, plug		RD.4531			1
Connection, terminal plug		D.70396			2
Insert, casing		RD.4866			1
Insert, negative plug		RD.4332			1
Insert, positive plug		RD.4331			1
Moulding plug		RD.4333			1
Screw, cheesehead, 5 BA, clip to lamp		K.1702/Z			2
Sleeve, small cable, lamp		RD.4868			2
Sleeve, large cable, lamp		RD.4869			1
Unit, lamp		RD.4327			1
Washer, F.S., 5 BA		K.9003/Z			2
LAMP, fog assembly	6	RD.5155		2	
Bulb, 12v 36w SCC		RD.4165			2
Cable, lamp to connector		RD.4749			2
Bush, rubber connectors		RD.4745			4
Connector		RD.4744			2
Nut		RD.6109			2
Sleeve, terminal		RD.3287			2
Washer		K.4425/Z			2

GROUP Q11. (Continued overleaf)

	REF. NO.	PART NO.	QUANTITY GROUP	QUANTITY ASS'LY	NOTES
GROUP Q.11. LAMPS AND MOUNTING (Continued)					
LAMP, head, assembly, complete with (Home)		RD.5681	2		T
Bulb, 12v 48/48 WDC, L.H. lamp		RD.5296		1	
Bulb, 12v 48w, S.C. R.H. lamp		RF.4516		1	
LAMP, head, assembly, as above except lamp		RD.6651	2		U
LAMP, head, assembly, with (Export, all except U.S.A. and Europe)		RD.5681	2		T
Bulb, 12v 36/36w		RD.4162		2	
LAMP, head, assembly, as above except lamp	7	RD.6651	2		U
LAMP, head, assembly, with (Europe, except France)		RD.5681	2		T
Bulb, 12v 36/36w		RD.5329		2	
LAMP, head assembly, as above except lamp		RD.6651	2		U
LAMP, head, assembly, with (France)		RD.5445	2		T
Bulb, 12v 36/w		RD.5330		2	
LAMP, head assembly, (France)		RD.6771	1		U
LAMP, head assembly, (U.S.A.)		RD.5062	2		
LAMP, luggage boot, assembly, consisting of	8	RD.4733	1		
Bracket		RD.3360		1	
Bulb, 16v 3w		RD.4242		1	
Cable, lamp to earth		RD.4254		1	
Cable, lamp to switch		RD.4711		1	
Clip		RD.3359		1	
Cover, bulb		RD.3358		1	
Cover, terminal		RD.3357		1	
Eye, cable to bulb holder and earth		RD.3955		2	
Eye, cable switch		RD.3406		1	
Holder, bulb		RD.3353		1	
Nut, half, 3 BA		K.4304/Z		2	
Screw, cheesehead, 3 BA		K.1804/Z		2	
Sleeve, rubber		RD.7589		2	
Washer, spring, 3 BA		K.9005/Z		2	
LAMP, map, assembly, as RD.4733 except		RD.4314	1		
Bracket, lamp		RD.4278		1	
Cable, map lamp to switch		RD.4315		1	
Cable, map lamp to earth		RD.4316		1	
Eye, cable map lamp		RD.3955		2	
Eye, cable earth		RD.3690		1	
LAMP, reverse, including (LC)	9	RD.4716	2		
Bulb, 12v 24w		RE.10604		2	
LAMP, roof, assembly, with		RD.4613	1		A
Bulb, 12v 6w 5BC		RD.4518		1	

GROUP Q.11. (Continued overleaf)

GROUP Q11. LAMPS AND MOUNTING (Continued)

	REF. NO.	PART NO.	QUANTITY GROUP	QUANTITY ASS'LY	NOTES
LAMP, roof, assembly, as above	10	RD 4742	1		A
LAMP, stop-tail, assembly, consisting of	11	RD 3704	2		
(When no bulb indexing pin is fitted)					
Bulb, 12v 24/6w		RF 4517		2	
Lamp, stop-tail		RD 3570		2	
Ring, spring, screw, lamp		RD 3685		2	
Screw, fixing, 2 BA, lamp stop tail		RD 3684		2	
LAMP, stop-tail, assembly as RD.3704 except		RD 7066	2		
(When bulb indexing pin is fitted)					
Bulb, 12v 18/6w		RD 6602		2	
Lamp		RD 7065		2	
LAMP, side, assembly, consisting of	12	RD 4587	2		
Bulb		RD 5085		2	
Screw, front motif	13	RD 6575		2	
MOTIF, wing lamp	14	RD 4535	2		
MOTIF, head lamp		RD 4534	2		T
MOTIF, head lamp	15	RD 7125	2		U
NUT, 2 BA, stop-tail lamp	X.21	K 4006/Z	4		
NUT, half, 3 BA, earth roof lamp	X.24	K 4304/Z	2		
NUT, half, 3 BA, earth terminal rear junction box		K 4304/Z	3		
NUT, half, 3 BA, earth terminal roof light		K 4304/Z	3		
NUT, half, 2 BA, luggage boot lamp bracket	16	CS 5506	2		
NUT, half, 2 BA, luggage boot lamp cable clip		RD 4307/Z	3		
NUT, for lamps	17	RD 6109	2		
NUT, ¼", fog lamp support bracket	X.24	K 4310/Z	4		
PAD, rubber stop tail lamp	18	RD 3568	2		
PIECE, bridge, stop-tail lamp	19	RD 3569	2		
RING, sealing head lamp motif screw, 3 BA	20	RD 4562	2		
RING, sealing head lamp motif screw, 5 BA	21	RD 4563	2		
SCREW, cheesehead, 2 BA, clip cable luggage boot lamp	X.46	K 1904/Z	3		
SCREW, cheesehead, 3 BA, earth terminals rear junction box	X.45	K 1810/Z	1		
SCREW, cheesehead, 3 BA, earth terminals roof light	X.45	K 1807/Z	2		
SCREW, cheesehead, 3 BA, earth terminals twin fog lamps	X.45	K 1807/Z	2		
SCREW, cheesehead, 3 BA, head lamp motif front fixing	X.45	K 1804/Z	2		
SCREW, cheesehead, 5 BA, headlamp motif rear fixing	X.44	K 1704/Z	2		
SCREW, cheesehead, stop tail lamp and number plate wiring	X.46	K 1904/Z	7		
SCREW, countersunk head, 2 BA, fixing headlamp	X.50	K 2802/Z	16		U
SCREW, 4 BA, reverse lamps, L.C.		CS 30053/Z	4		
SCREW, 2 BA, bracket, luggage boot lamp	22	CS 30562/Z	2		
SCREW, set, ¼", fog lamp support bracket	X.55	FC 905/Z	4		
SCREW, securing, rear, wing motif	23	RD 6576	2		
SCREW, wood, No.4, attachment roof lamp		CS 34014/Z	2		
SEAL, head lamp	24	RD 6700	2		U
STRIP, tapping, motif wing lamp	25	RD 4536	2		

GROUP Q11. (Continued overleaf)

GROUP Q11. LAMPS AND MOUNTING (Continued)

	REF. NO.	PART NO.	QUANTITY GROUP	QUANTITY ASS'LY	NOTES
WASHER, fog lamp support bracket	X.85	K 4425/Z		2	
WASHER, plain, 2 BA, bracket luggage boot lamp	26	CS 32044/Z		2	
WASHER, plain, 3 BA, head lamp motif, front fixing	X.85	K 4446		2	
WASHER, plain, bevelled ¼" fog lamp support bracket	X.84	KB 3905/Z		4	
WASHER, plain, 5 BA, head lamp fixing rear fixing	X.85	K 4401/Z		2	
WASHER, plain, 3 BA, terminal earth, rear junction box	X.85	K 4446/Z		2	
WASHER, plain, 3 BA, terminal earth, roof light	X.85	K 4446/Z		3	
WASHER, spring, 2 BA, bracket luggage boot lamp	27	CS 6706/Z		2	
WASHER, spring, 2 BA, clip cable luggage boot lamp	X.87	K 9006/Z		3	
WASHER, spring, 3 BA, head lamp motif, front fixing	X.87	K 9005/Z		2	
WASHER, spring, 5 BA, headlamp, motif, rear fixing	X.87	K 9003/Z		2	
WASHER, spring, 2 BA, stop-tail lamp	X.87	K 9006/Z		4	
WASHER, spring, 3 BA, terminal earth, rear junction box	X.87	K 9005/Z		2	
WASHER, spring, 3 BA, earth twin fog lamps	X.87	K 9005/Z		2	
WASHER, spring, 3 BA, terminal earth roof light	X.87	K 9005/Z		3	
WASHER, spring, ¼" fog lamp support bracket	X.87	K 9008/Z		4	

GROUP Q12. MOTOR, STARTER

Comprising

BEARING, ball, driven gear, Ransome and Marle		RD 5794		1	
BEARING, ball, driven gear, Fischer		RD 7529		1	
BEARING, ball, driven gear, Hoffman	1	RD 3957		1	
DOWEL, idler gear bearing pin support	2	RD 3161		2	
GEAR, driven, assembly, consisting of	3	DW 651A		1	
Bush		DW 652			1
+ Gear		DW 651			1
Plate		DW 653			1
GEAR, driving, armature shaft	4	DB 986		1	
GEAR, idler, assembly, consisting of	5	DB 987A		2	
Bush		DB 713			1
+ Gear		DB 987			1
HOUSING, gear	6	RD 4581		1	
JOINT, gear housing to motor	7	RD 3131		1	
MOTOR, starter, R.C. assembly, including	8	RD 3127		1	
Armature, assembly (270931)		RD 4387			1
Bearing, Hoffman LS5 (189295)		RD 4383			1
Bearing, Hoffman L17 (189308)		RD 4386			1
Bolt, .250" dia., trough fixing (255459)		RD 4389			2

GROUP Q12. (Continued overleaf)

GROUP Q12. MOTOR, STARTER (Continued)

MOTOR, starter, R.C. assembly (Continued)

		REF. NO.	PART NO.	QUANTITY GROUP	QUANTITY ASS'LY	NOTES
Bracket, assembly, with brush boxes	(271048)		RD 4381		1	
Bracket, with studs	(271047)		RD 4385		1	
Brushes, set	(271050)		RD 4384		1	
Cover, assembly	(270426)		RD 4380		1	
Fields, set	(271149)		RD 4388		1	
Springs, set brush	(271051)		RD 4382		1	
MOTOR, starter, L.C. same as above except for position of terminal			RD 4584	1		
NUT, armature shaft, retaining		9	RD 3129	1		
NUT, externally threaded, ball bearing retaining		10	D 76262	1		
NUT, full, 2 BA, gear housing retaining stud		X.21	K 4006/N	4		
NUT, full, 2 BA, idler gear bracket, retaining stud		X.21	K 4006	4		
PIN, bearing, idler gear		11	DB 857	2		
PLUG, lubrication hole		12	RD 5129	1		
SUPPORT, idler, gear bearing pin		13	DB 851	1		
WASHER, adjusting, idler gear, .025 thick		14	RD 3579	2		A
WASHER, adjusting, idler gear, .030 thick			RD 3580	2		A
WASHER, adjusting, idler gear, .035 thick			RD 3581	2		A
WASHER, adjusting, idler gear, .040 thick			RD 3582	2		A
WASHER, adjusting, idler gear, .045 thick			G 50062	2		A
WASHER, adjusting, idler gear, .050 thick			G 50063	2		A
WASHER, adjusting, idler gear, .055 thick			G 50064	2		A
WASHER, adjusting, idler gear, .060 thick			G 50065	2		A
WASHER, adjusting, idler gear, .065 thick			G 50066	2		A
WASHER, aluminium, .312" dia., gear lubricator		X.83	KB 1077	1		
WASHER, lock, armature shaft retaining nut						
WASHER, lock, armature shaft retaining nut		15	DB 853	1		
WASHER, spring, 2 BA, gear housing retaining stud		X.87	K 9006/N	4		
WIRE, locking, ball bearing retaining nut		16	RD 3162	1		

N.P. Lucas Part Numbers in Brackets.

GROUP Q13. PLATE, REAR NUMBER

Comprising

NUMBER, plate rear, assembly with (Cornercroft)		1	RD 4588	1		
Bulb, 12v 6w see reverse			RF 4518		4	
Bulb, 12v 3w illumination			RD 5085		2	
Panel, glass			RD 7524		1	
Rim and glass assembly complete with fixing screws			RD 7525		2	
Screw, fixing box to panel or			RD 7519		4	
Screw, fixing box to panel			RD 7518		6	
Washer, cork			RD 7891		2	
Washer, fibre			RD 7592		6	
NUMBER, plate rear assembly with (Cornercroft)		2	RD 5677	1		
Bulb, 12v 24w SCC			RD 4166		2	
Bulb, 12v 3w illumination			RD 5085		2	
Button, centre with screw and washer			RD 7772		2	

GROUP Q13. (Continued overleaf)

GROUP Q13. PLATE, REAR NUMBER (Continued)

NUMBER, plate rear assembly with (Cornercroft) (Continued)

	REF. NO.	PART NO.	QUANTITY GROUP ASS'LY	NOTES
Glass, moulded		RD 7890	2	
Panel, glass		RD 7524		
Rim, and glass assembly (including RD.7890 and RD.7772)		RD 7738	2	
Screw, fixing box to panel		RD 7518	6	
Washer, bezel, inner, aluminium (formerly fibre)		RD 7110	2	
Washer, bezel outer, cork		RD 7892	2	
Washer, fibre		RD 7592	6	
Washer, aluminium, reverse lamp		RD 7110	2	
SEAL, rear number plate (Cornercroft)	4	RD 5299	1	

GROUP Q13A. REAR LICENCE PLATES.
(Fitted only on cars for use in U.S.A. and at customers request).

Comprising

BOLT, clamping, assembly with nut and stud	3	RD 4339	1	
BRACKET, adjustable	4	RD 4334	1	
BRACKET, rear number plate assembly, consisting of		RD 4318A	1	
Bracket		RD 4318	1	
Stud or		KB 365/Z	3	
BRACKET, rear number plate assembly, consisting of	5	RD 5247A	1	
Bracket		RD 5247	1	
Stud	X.68	KB 350/Z	3	
BULB, 12v 6w (2 off when RD.4318 is fitted)		RD 4997	1	
LAMP, number plate (with RD.4318 bracket)		RD 4336	1	
LAMP, number plate (with RD.5247 bracket)	6	RD 5248	1	
NUT, dome number plate	7	RD 4337	1	
NUT, half, .250" dia., bracket retaining	X.24	K 4310/Z	3	
NUT, 2 BA, number plate	X.24	K 4307/Z	2	
PAD, rubber, bracket	8	RD 4335	1	
SCREW, cheesehead, 2 BA, lamp (with RD.5247 bracket)	X.46	K 1910/Z	2	
WASHER, plain, .250" dia., bracket	X.85	K 4407/Z	3	
WASHER, plain, .250" dia., number plate	X.86	K 8833	1	
WASHER, spring, .250" dia.	X.87	K 9008/Z	3	
WASHER, spring, .250" dia., number plate	X.87	K 9008/Z	1	
WASHER, spring, lamp (with RD.5247 bracket)	X.87	K 9006/Z	2	

GROUP Q13B. REAR LICENCE PLATE (Switzerland)

Comprising

BOX, junction, 4 way	9	RD 3085	1	
BOLT, clamping	3	RD 4339	1	
BRACKET, adjustable	10	RD 6213	1	

GROUP Q13B. (Continued overleaf)

GROUP Q13B. REAR LICENCE PLATE (Switzerland) (Continued)

	REF. NO.	PART NO.	QUANTITY GROUP	QUANTITY ASS'LY	NOTES
BRACKET, rear number plate assembly	11	RD 6214A		1	
Bracket		RD 6214		1	
Stud		KB 350/Z		3	
BULB, 12v 6w M.B.C. number plate lamp		RD 4997		2	
CABLE, earth, L.H. stop lamp to number plate		RD6217		1	
CABLE, supply, junction box to rear number plate		RD 6216		1	
CABLE, supply, lamps to junction box		RD 6218		1	
CABLE, earth, lamps to junction box		RD 6219		1	
LAMP, number plate	6	RD 5248		2	
NUT, dome number plate	7	RD 4337		1	
NUT, half, .250" dia., bracket retaining	X.24	K 4310/Z		3	
PAD, rubber, bracket	8	RD 4335		1	
PLATE, mounting, 4 way, junction box	12	RD 6215		1	
SCREW, cheesehead, 2 BA, lamp rear number plate	X.46	K 1910/Z		4	
SCREW, junction box mounting	X.45	K 1807/Z		2	
WASHER, plain, .250" dia., bracket	X.85	K 4407/Z		3	
WASHER, plain, .250" dia., number plate	X.86	K 8883/Z		1	
WASHER, FS, .250" dia.	X.87	K 9008/Z		3	
WASHER, FS, junction box mounting	X.87	K 9005/Z		2	
WASHER, FS, lamp fixing	X.87	K 9006/Z		4	

GROUP Q13C. TAIL LIGHT SWITCH (Australia)

Comprising

BUTTON, push		RD 4785		1	
CABLE, tail junction box to tail light switch (supply)		RD 4791		1	
CABLE, tail light switch to tail junction box		RD 4792		1	
CABLE, tail, light switch, rubber plate light		RD 4793		2	
CLIP, sleeve		RD 3434		5	
COVER, switch, assembly		RD 4768		1	
ESCUTCHEON, tail light switch		RD 4766		1	
EXTENSION, push button switch		RD 4785		1	
NUT, switch, securing		RD 4784		1	
PLATE, assembly, switch mounting		RD 4772		1	
SCREW, self tapping switch cover		CS 31020/Z		6	
SCREW, 2 BA, countersunk escutcheon		CS 33602/E		2	
SEAL, switch cover		RD 4771		1	
SHIM, switch		RD 4787			B
SWITCH, tail light		RD 4795		1	
WASHER, escutcheon		RD 4767		1	
WASHER, sealing push button		RD 4786		1	
WASHER, switch body		RD 4788		1	

GROUP Q14. RADIO AND FITTINGS

Comprising

AERIAL, roof, assembly, fixed roof type	1	RD 5218		1	
AERIAL, roof, assembly, sliding roof type		RD 5217		1	
AERIAL, roof, assembly, scuttle type		RD 6401		1	

GROUP Q14. (Continued overleaf)

GROUP Q14. RADIO AND FITTINGS (Continued)

	REF. NO.	PART NO.	QUANTITY GROUP	QUANTITY ASS'LY	NOTES
BOLT, condenser to fuel pump retaining	X.10	K 202	2		
BRACKET, fuel pump condenser	2	RD 3407	2		
CABLE, lead in from aerial	3	RD 6325	1		
CABLE, receiver to earth with cable eyes, RD.3352	4	RD 3699	1		
CLIP, aerial lead in cable, lower	5	RD 3700	2		
CLIP, aerial lead in cable, upper	6	RE 3529	1		
CONDENSER, electric clock with:		RD 3413	1		X
Condenser		RD 3411		1.	
Eye, cable		RD 3406		1	
CONDENSER, electric clock (when 3-position heater and demister switches are fitted)		RD 6697	1		Y
CONDENSER, dynamo assembly, with:		RD 6080	1		
Condenser		RD 3410		1	
Eye, cable		RD 3345		1	
CONDENSER, fuel pump, assembly with:	7	RD 3414	2		
Condenser		RD 3411		2	
Eye, cable		RD 3533		2	
CONDENSER, horn relay assembly, with:		RD 4701	1		
Condenser		RD 3410		1	
Eye, cable		RD 3534		1	
Sleeve, rubber		RD 7589		1	
CONDENSER, ignition coil, assembly, with:		RD 5230	1		
Condenser		RD 3410		1	
Eye, cable		RD 3533		1	
CONDENSER, windscreen, wiper, assembly		RD 3411	1		
NUT, 2 BA, clip, aerial lead in		CS 5703/Z	1		
NUT, .250" dia., condenser, petrol pump		K 4310/Z	2		
PACKING, rubber, radio receiver	8	RD 3403	2		
PIECE, distance, roof aerial	9	RD 3724	1		
PIECE, distance, radio receiver	10	RD 4580			B
RECEIVER, radio (when metal finisher is fitted)	11	RD 4639	1		
RECEIVER, radio (when wood finisher is fitted)		RD 4954	1		
SCREW, binding head, .250" dia., radio mounting	12	CS 30204/Z	5		
SCREW, 2 BA, clip, aerial lead in	13	CS 30566/Z	1		
WASHER, spring, .250" dia., fuel pump condenser and radio mounting		K 9008/Z	7		
WASHER, spring, aerial		K 9011/Z	1		
WASHER, spring, 2 BA, aerial lead in cable clip, upper	14	CS 6731/Z	1		

GROUP Q14A. RADIO AND FITTINGS WHEN SPEAKER IS MOUNTED ON STEERING COLUMN.

Comprising

	REF. NO.	PART NO.	QUANTITY GROUP	QUANTITY ASS'LY	NOTES
AERIAL, roof, assembly (fixed roof type)	1	RD 5217	1		
AERIAL, roof, assembly (sliding roof type)		RD 5218	1		
BOARD, baffle, loudspeaker (LC)		RD 7537	1		
BOARD, baffle, loudspeaker (RC)	2	RD 7536	1		
BOLT, condenser to fuel pump retaining	X.10	K 202/Z	2		
BOLT, 2 BA, control unit and centre support bracket to side bracket	X. 9	K 101/Z	2		
BOLT, clamping bracket to mounting bracket	X.10	KC 202/Z	1		
BOLT, clamping bracket to mounting bracket	X.10	KC 205/Z	1		
BRACKET, assembly, radio mounting, R.H.	3	RD 6620	1		
BRACKET, assembly, radio mounting, L.H.	4	RD 6621	1		
BRACKET, clamping sleeving column to bracket	5	RD 7535	1		
BRACKET, fuel pump condenser	6	RD 3407	2		
BRACKET, support, control unit assembly	7	RD 7609	1		
BRACKET, mounting rear, assembly	8	RD 7538	1		
BRACKET, baffle to dash, assembly (RC)	9	RD 7602	1		
BRACKET, baffle to dash, assembly (LC)		RD 7603	1		
CABLE, control unit to power pack	10	RD 7042	1		
CABLE, lead in from aerial	11	RD 6325	1		
CABLE, receiver to earth with cable eyes, RD.3352		RD 3699	1		
CLIP, aerial lead in cable, lower	12	RD 3700	2		
CLIP, aerial lead in cable, upper	13	RE 3529	1		
CONDENSER, electric clock with:		RD 3413	1		
Condenser		RD 3411		1	
Eye, cable		RD 3406		1	
CONDENSER, dynamo, assembly, with:		RD 6080	1		
Condenser		RD 3410		1	
Eye, cable		RD 3345		1	
CONDENSER, fuel pump assembly with:	14	RD 3414	2		
Condenser		RD 3411		2	
Eye, cable		RD 3533		2	
CONDENSER, horn relay assembly with:		RD 4701	1		
Condenser		RD 3410		1	
Eye, cable		RD 3534		1	
Sleeve, rubber		RD 7589		1	
CONDENSER, ignition coil, assembly with:		RD 5230	1		
Condenser		RD 3410		1	
Eye, cable		RD 3533		1	
CONDENSER, windscreen wiper assembly		RD 3411	1		
CONTROL, unit, radio	15	RD 7041	1		
GROMMET, rubber, support bracket	16	RD 5032	2		
LOUDSPEAKER, external	17	RD 7560	1		
NUT, 2 BA, upper lead in cable clip	18	CS 5703/Z	1		
NUT, half, .250" dia., fuel pump condenser retaining bolt	X.24	Y 4310/Z	2		

GROUP Q14A. (Continued overleaf)

GROUP Q14A. RADIO AND FITTINGS WHEN SPEAKER IS MOUNTED ON STEERING COLUMN. (Continued)

	REF. NO.	PART NO.	QUANTITY GROUP	QUANTITY ASS'LY	NOTES
NUT, 2 BA, control unit and centre support bracket to side bracket	X.24	K 4307/Z		2	
PIECE, packing, radio receiver	19	RD 4580			B
PIECE, distance, roof aerial	20	RD 3724		1	
PIECE, distance, control unit	21	RD 7557		2	
PIECE, distance, steering column to bracket	22	RD 7542		1	
PIECE, distance, bolt, clamping bracket	23	RD 7543		1	
POWER, unit	24	RD 7559		1	
SCREW, clip, lead in	25	CS 30566		1	
SCREW, wood, speaker to baffle	26	CS 31620/Z		4	
SCREW, .250" dia., binding head, radio mounting	27	CS 30204/Z		5	
SCREW, set, 2 BA, rear, control unit	X.54	FC 152/Z		1	
SCREW, set, 2 BA, side bracket to control unit	X.54	KC 174/Z		2	
SCREW, set, 2 BA, power amplifier to side bracket R.H.	X.54	FC 152/Z		1	
SCREW, set, 2 BA, power amplifier to side bracket L.H.	X.54	KC 170/Z		1	
SCREW, set, 2 BA, stiffener to power amplifier	X.54	KC 151/Z		2	
SCREW, baffle board to bracket	28	CS 30163/E		3	
WASHER, FS. side bracket	X.87	K 9006/Z		2	
WASHER, FS, side bracket to control unit	X.87	K 9006/Z		2	
WASHER, FS, rear, control unit	X.87	K 9006/Z		1	
WASHER, FS, power amplifier unit to side bracket	X.87	K 9006/Z		4	
WASHER, FS, control unit and centre support bracket to side bracket	X.87	K 9006/Z		2	
WASHER, FS, bolt, clamping bracket	X.87	K 9008/Z		2	
WASHER, FS, bolt, speaker to baffle	X.87	K 9008/Z		4	
WASHER, FS, aerial	X.87	K 9011/Z		1	
WASHER, FS, clip, lead in	29	CS 6731/Z		1	
WASHER, FS, condenser petrol pump	X.87	K 9008/Z		2	
WASHER, FS, radio mounting	X.87	K 9008/Z		5	
WASHER, plain, 2 BA, rear, control unit	X.85	K 4416/Z		2	
WASHER, plain, 2 BA, rear, control unit (bevelled edge)	X.84	KB 3904/Z		1	
WASHER, plain, 2 BA, side bracket to control unit	X.85	K 4404/Z		2	
WASHER, plain, power amplifier to side bracket	X.84	KB 3904/Z		2	
WASHER, plain, earthing strip, body bracket	X.85	K 4404/Z		3	

GROUP Q14B. SPARE PARTS FOR RADIOMOBILE RECEIVER.

Comprising

LAMP, 12 volt	RD 4526	1	
VALVE, W.81M (113417A).	RD 4477	2	
VALVE, X.81M (113418A)	RD 4478	1	
VALVE, DL.82 (113419A)	RD 4479	1	
VALVE, KT.81 (113420A)	RD 4480	1	
VALVE, U.82 (113421)	RD 4481	1	
VIBRATOR, 12 volt (36212A)	RD 4482	1	

GROUP Q15. SWITCHBOX

Comprising

	REF. NO.	PART NO.	QUANTITY GROUP	QUANTITY ASS'LY	NOTES
ARM, main contact assembly, consisting of	1	DW 222		2	
Arm		D 74904		1	
Bush		D 74288		1	
Connector		D 78908		1	
Shoe		D 74905		1	
Spring		D 74909		1	
Rivet, shoe, retaining		KB 2356		2	
Rivet, spring, retaining		KB 2406		1	
BALL, steel, .3125" dia., main and ignition levers	2	RG. 6954		2	
BARREL, starter contact	3	D 74946		1	
BASE, switch, assembly, consisting of	4	RD 3968A		1	
+ Base		RD 3968		1	
+ Bush, ignition spindle		D 75087		1	
+ Bush, main spindle		D 75088		1	
+ Insert, screwed		D 75085		2	
+ Pivot		D 75086		2	
BODY, assembly, consisting of	5	RD 3055A		1	
Body		RD 3055		1	
Bush, ball spring stop		E 85851		2	
Stud, base and cover, retaining		D 74955		3	
BOLT, 5 BA, starter switch, retaining		K 3711/Z		4	
BRUSH, accessories, consisting of 6 stampings D.74925 and dynamo brush stampings D.74260	6	D 74960		1	
COVER	7	RD 3056		1	
CARBON, contact, starter and retaining bush D.74661 (1) a spring D.74667	8	D 76082		1	
LOCK, vaughan		D 75098		1	
NUT, 2 BA, switch box mounting		K 4307/Z		2	
OPERATING, lever, ignition and cam (RD.6037)	9	D 76102		1	
OPERATING, lever main	10	D 76103		1	
PACKING, brush	11	D 74324		2	
PACKING, brush, accessories	12	D 74924		2	
PACKING, brush battery	13	D 74928		1	
PACKING, brush ignition	14	D 74931		4	
PACKING, brush, parking light and starter	15	D 74296		4	
PIECE, coupling	16	D 75873		1	
PIECE, distance	17	D 54862		1	
PIN, split, .031" dia., contact spindle	X.31	K 4646/Z		2	
PLATE, angle accessories	18	D 74934		1	
PLATE, angle, dynamo arm	19	D 74957		1	
PLATE, angle, fuel pump	20	D 74938		1	
PLATE, angle terminals	21	D 74939		3	
PLATE, angle terminals	22	D 74940		2	
PLATE, backing, starter, switch, short	23	D 74949		2	
PLATE, contact, long	24	D 74950		2	
PLUG, ignition, lever spring, retaining	25	D 74900		1	
PLUG, main lever spring, retaining	26	D 74899		1	
PUSH, button, starter and insulating bush D.74659	27	RD 3192		1	

GROUP Q15. (Continued overleaf)

GROUP Q.15. SWITCHBOX (Continued)

	REF. NO.	PART NO.	QUANTITY GROUP	QUANTITY ASS'LY	NOTES
RING, starter push	28	E.51034	1		
RING, switchbox, retaining	29	RD.3350	1		C
SCREW, cheesehead, 7 BA, connection retaining		K.1669/Z	1		
SCREW, cheesehead, 5 BA, accessories brush		K.1722/Z	2		
SCREW, cheesehead, 5 BA, dynamo arm		K.1737/Z	2		
SCREW, cheesehead, 5 BA, finger spring		K.1750/Z	2		
SCREW, cheesehead, 5 BA, fuel pump connection		K.1713/Z	1		
SCREW, cheesehead, 5 BA, ignition supply		K.1707/Z	1		
SCREW, cheesehead, 5 BA, lamps connection		K.1731/Z	2		
SCREW, cheesehead, 5 BA, pass light brush		K.1707/Z	1		
SCREW, cheesehead, 3 BA, terminals		K.1801/Z	8		
SCREW, countersunk head, 5 BA, lock		K.2604/Z	3		
SCREW, countersunk head, 2 BA, switchbox mounting		K.2813/Z	2		
SPINDLE, ignition coupling, assembly, consisting of	30	DW.558	1		
Contact		D.54864		1	
Coupling		D.74917		1	
Nut, half, 3 BA		K.4304/Z		2	
Piece, distance		DW.557		1	
Spindle, operating		D.74918		1	
Washer, adjusting, .002 thick (24 SWG)		RD.3148		1	A
Washer, adjusting, .028 thick (22 SWG)		RD.3149		1	A
Washer, adjusting, .036 thick (20 SWG)		RD.3150		1	A
Washer, plain, 3 BA		K.4446/Z		1	
Washer, spring, 3 BA		K.9005/Z		1	
SPINDLE, main contact, assembly, consisting of:	31	RD.3189A	1		
Bush, insulating		D.74903			
Bush, insulating, large		D.74898		1	
Contact, front, main		D.74894		1	
Contact, rear, main		D.74896		1	
Coupling		D.74264		1	
Coupling, barrel		D.74897		1	
Nut, coupling, retaining		D.74265		1	
Ring, securing		D.74276		1	
Spindle		D.74895		1	
Washer, insulating, large		D.50341		2	
Washer, large steel, chamfered		D.74275		1	
Washer, thrust plain large		RD.3190		1	
Washer, insulating		RD.7546		1	
SPRING, cams	32	RD.3191	2		
SPRING, starter button return	33	D.74669	1		
STOP, brush	34	D.74932	1		
STOP, brush	35	D.74933	1		
STOP, brush, parking light	36	D.74295	1		
STOP, brush, to starter and ammeter	37	D.74926	1		
SWITCH, master, contact maker	38	D.74902	1		
TAB, locking, main switch lever	39	D.74266	1		
WASHER, spring, carbon contact	40	D.74668			
WASHER, insulating, small, main contact spindle	41	D. 1426	2		
WASHER, plain, adjacent to spring washer on contact spindle		K.4404/Z	1		

GROUP Q.15. (Continued overleaf)

GROUP Q15. SWITCHBOX (Continued)

	REF. NO.	PART NO.	QUANTITY GROUP	QUANTITY ASS'LY	NOTES
WASHER, plain, finger spindle and spring		K 4402/Z	4		
WASHER, plain, 3 BA, ignition switch		K 4446/Z	1		
WASHER, plain, studs and terminals		K 4446/Z	11		
WASHER, plain, thrust, small, main, contact spindle	42	RD 3188	1		
WASHER, spring, 7 BA, connection		K 9002/Z	1		
WASHER, spring, 5 BA, brush screw, finger spring, lamp screws, starter switch		K 9003/Z	16		
WASHER, spring, 3 BA, studs and terminals		K 9005/Z	11		
WASHER, spring, 2 BA, main contact spindle		K 9006/Z	1		
WASHER, spring, 2 BA, switchbox screw		K 9006/Z	2		C
WASHER, Thackeray, 3 BA, cover studs		K 3902/Z	3		
GUARD, switchbox keys		DW 868	1		

GROUP Q16. SWITCHES SEPARATE

Comprising

BASE, stop and reverse light switch, assembly, consisting of	1	DW 237A	1		
Base		DW 237		1	
Insert, bracket		D 100456		2	
Insert, terminal		D 73732		2	
CAP, spring, stop and reverse light switch	2	DW 235	1		
CAP, rubber footswitch	3	RD 5153	1		
CLIP, cover, stop and reverse light switch	4	DB 410	1		
CLIP, tail light switch cables	5	RD 3434	1		D
CONTACT, stop and reverse light switch	6	DB 525	2		
COVER, stop and reverse light switch	7	DB 408	1		
NUT, half, 3 BA, stop and reverse light contacts and terminals	X.24	K 4305/Z	4		
NUT, half, 3 BA, stop and reverse light switch base	X.24	K 4304/Z	2		
PIN, split, 062" dia., stop and reverse light switch spring cap retaining	X.31	K 4602/Z	1		
PLATE, contact stop, stop and reverse light switch	8	DB 526	2		
PLUNGER, stop and reverse light switch assembly consisting of	9	DW 234A	1		
Rod, operating		DW 234		1	
Support, insulation		DW 233		1	
Tube, contact		DB 414		1	
SCREW, cheese head, 2 BA, footswitch retaining	X.46	K 1910/Z	2		
SCREW, No.2, luggage boot lamp		RD 4778	2		
SPRING, contact, stop and reverse light switch	10	DB 417	1		
SWITCH, foot, Lucas, No. FS.22	11	DB 2360	1		
SWITCH, see saw, luggage boot lamp		RD 3572	1		
SWITCH, progressive, on, off, tail light	12	RD 4062	1		D
SWITCH, door, roof light	13	RD 3830	4		
SWITCH, roof light, see saw	14	RD 3572	1		
SWITCH, starter solenoid, see Group Q1.					

GROUP Q16. (Continued overleaf)

GROUP Q16. SWITCHES SEPARATE (Continued)

WASHER, plain, stop and reverse light switch terminal	X.85	K 4447/Z	2	
WASHER, spring, 3 BA, stop and reverse light switch base and contacts	X.87	K 9005/Z	6	
WASHER, spring, 2 BA, footswitch retaining	X.87	K 9006/Z	2	

NOTE:- Ø Used on cars domiciled in Australia.

GROUP Q17. TRAFFICATOR

Comprising

HANDLE, trafficator time switch	1	RD 3466	1	
PIECE, distance, time switch	2	RD 4560	1	
SCREW, time switch retaining	3	RD 4350	2	
SCREW, trafficator fixing	4	RD 3954	2	
SWITCH, time assembly with handle screw	5	RD 3107	1	
TRAFFICATOR, Lucas, No. SF.34. L11.5400.BH assembly including	6	RD 3211	2	
Arm, assembly		RD 4444		1
Bulb, 12v		RD 4167		1
Cover		RD 4445		1
Eyelet		RD 4448		1
Lead		RD 4446		1
WASHER, locking, trafficator screw	7	RD 3953	2	
WASHER, spring, time switch screw	8	RD 3273	2	

GROUP Q18. WIPER WINDSCREEN (Lucas)

Comprising

ARM, wiper		RD 4139	2	
ARM, wiper	1	RD 4816	2	
BLADE, or		RD 4138	2	
BLADE	2	RD 7562	2	
BLOCK, mounting rubber	3	RD 6222	3	
COLLET, wiper arm (used with RD.4138 arm)		RD 4244	2	
COLLET, wiper arm (used with RD.4816 arm)	4	RD 4819		
GROMMET, wiper spindle	5	RD 4137	2	
GROMMET, cable	6	RD 4237	1	
MOTOR, spindle boxes and drive assembly including (RC) (used with RD.4139 arm)		RD 5443	1	
Cable and rack assembly with cross head				
Clip, cable	8	RD 6225		1
Knob	9	RD 5351		2
Wheel box assembly with switch	10	RD 6229		1
Wheel box assembly less switch		RD 6330		1

GROUP Q18. (Continued overleaf)

GROUP Q18. WIPER WINDSCREEN (Lucas) (Continued)

	REF. NO.	PART NO.	QUANTITY GROUP ASS'LY	NOTES
MOTOR, spindle boxes and drive assembly (RC) as above except for spindles (used with RD.4816 arm)	11	RD 5950	1	
MOTOR, spindle boxes and drive assembly (LC) as above except for re-arrangement of spindle boxes and drives. (use with RD.4139 arm)		RD 4967	1	
MOTOR, spindle boxes and drive assembly(LC) as above, except for spindle (used with RD.4816 arm)		RD 5141	1	
NUT, collet, wiper arm (used with RD.4139 arm)		RD 4245	2	
NUT, collet, wiper arm (used with RD.4816 arm)	12	RD.4820	2	
STOP, wiper arm fitted with RD.4139		RD 4246	2	
WASHER, mounting spindle boxes	15	RD 4319		B
WASHER, plain, 2 BA, mounting spindle boxes		K 4804/Z	4	
WASHER, FS, 2 BA, mounting spindle boxes		K 9006/Z	4	

GROUP Q19. WIRING DASHBOARD

Comprising

CLIP, 18 mm, Bore, PVC, tubing	1	RD 3043	3	
CLIP, Jubilee, loom to connection		RD 4608	1	
CLIP, support, sleeving		RD 5100	2	
CLIP, L.H. dashboard conduit	2	RD 3058	1	
CLIP, R.H. dash conduit		RD 4936	1	
CONDUIT, L.H. side of dashboard		RD 5105	1	
CONDUIT, R.H. side of dashboard		RD 4937	1	
CONNECTION, switch box loom to dashboard		RD 3073	1	
ELBOW, conduit, L.H. side of dashboard		RD 5103	1	
ELBOW, conduit, R.H. side of dashboard		RD 5102	1	
SCREW, cheese head, 2 BA, conduit clip retaining		K 1904/Z	10	
SCREW, cheese head, 2 BA, conduit elbow retaining LH		K 1922/Z	2	
SCREW, cheese head, 2 BA, conduit elbow retaining R.H.	X.46	K 1928/Z	2	
SCREW, cheese head, 2 BA, connection to dashboard retaining		K 1904/Z	2	
WASHER, spring, 2 BA, conduit elbow clip and connection retaining screws	X.87	K 9006/Z	16	

GROUP Q20. WIRING, LOW TENSION AND FITTINGS

Comprising

BOLT, 2 BA, harness clip (RC)	X. 9	K 103/Z	18	
BOLT, 2 BA, harness clip (LC)		K 103/Z	27	
CABLE, front junction box to horn L.H. & R.H.		RD 6048	2	
CABLE, horn button, L.H. front junction box to horn relay		RD 5168	1	
CABLE, horn relay supply to horn relay coil		RD 3810	1	
CABLE, horn relay to L.H. front junction box to horn (LC)		RD 5165	1	

GROUP Q20. (Continued overleaf)

GROUP Q20. WIRING, LOW TENSION AND FITTINGS (Continued)

CABLE, ignition coil to distributor	RD 5683	1		
CABLE, L.H. front junction box to horn relay	RD 5164	1		
CABLE, regulator E to earth	RD 3795	1		
CABLE, solenoid switch to earth (RC)	RD 3617	1		
CABLE, solenoid switch to main fuse	RD 3789	1		
CLIP, cable, luggage boot lamp switch	RD 4257	4		
CLIP, cable, luggage boot lamp switch	RD 6082	3		
CLIP, harness, 11 mm (RC)	RD 3041	10		
CLIP, harness, 11 mm (LC)	RD 3041	17		
CLIP, 5 mm, sleeving, horn	RD 6082	2		
CLIP, 5 mm, sleeving, oil sump unit	RD 4004	3		
CLIP, 7 mm, sleeving heater to junction box (RC)	RD 5161	1		
CLIP, 7 mm, sleeving heater to junction box (LC)	RD 5161	2		
CLIP, 14mm, valance plates and crossmember	RD 3042	7		
CLIP, 11mm, sleeving reverse lamp	RD 4746	3		
CLIP, 18mm, sleeving	RD 3043	3		
CLIP, 18mm, sleeving, R.H. valance plate	RD 3043	3		
CLIP, 18mm, sleeving, main trunk	RD 3043	3		
GROMMET, rubber (LC)	RD 3209	7		
LOOM, instrument board, assembly, consisting of	RD 5185	1		
Cable, demister switch to heater switch	RD 3797		1	
Cable, instrument light switch to map light switch	RD 3812		1	
Cable, screen wiper switch to fuel gauge	RD 3816		1	
Cable, fuel gauge to fuel/oil level switch	RD 3817		1	
Cable, heater switch to screen wiper switch	RD 3905		1	
Cable, radio to cigar lighter	RD 6577		1	
Eye, cable, 3 BA, (Dowler LS5)	RD 3690		5	
Eye, cable, 3 BA, (Lucas)	RD 3344		1	
Sleeve, rubber	RD 7589		6	
LOOM, instrument board to dashboard assembly (RC) consisting of	RD 5460	1		L
Cable, ammeter to regulator 'A1'	RD 6003		1	
Cable, earth, instrument board to dash	RD 3900		1	
Cable, distribution board '8' to cigar lighter front	RD 3895		1	
Cable, demister switch to distribution board '11'	RD 3896		1	
Cable, distribution board (-) to clock	RD 3887		1	
Cable, ammeter to distribution board '8'	RD 6004		1	
Cable, demister (SW) to 12 way junction box	RD 5187		1	
Cable, speedo warning light to coachbuilder's junction box	RD 4849		1	
Cable, fog lamp switch to 12 way junction box	RD 5188		1	
Cable, fog lamp switch to distribution board '5'	RD 5189		1	
Cable, wiper switch to 12 way junction box	RD 3915		1	
Cable, heater switch to 12 way junction box	RD 3917		1	
Cable, instrument light switch to distribution board '5'	RD 3920		1	
Cable, fuel/oil switch to 12 way junction box	RD 3921		1	
Cable, fuel/oil switch to 12 way junction box (oil sump unit)	RD 3922		1	
Cable, fuel warning light to 12 way junction box	RD 3924		1	
Cable, ignition warning light to regulator 'D'	RD 3926		1	

GROUP Q20. (Continued overleaf)

GROUP Q20. WIRING, LOW TENSION AND FITTINGS (Continued)

	REF. NO.	PART NO.	QUANTITY GROUP	QUANTITY ASS'LY	NOTES
LOOM, instrument board to dashboard assembly (RC) (Continued)					
Cable, coachbuilder's junction box to distribution board '8'		RD 3790		1	
Eye, cable, 3 BA (Lucas)		RD 3344		2	
Eye, cable, 3 BA, (Dowler)		RD 3690		10	
Eye, cable, 2 BA, (Dowler)		RD 3533		1	
Eye, cable, cigar lighter		RD 3956		1	
Eye, cable, 5 BA, clock		RD 3406		1	
Sleeve, rubber, cable eye		RD 7589		14	
Sleeving, 30 mm		RD 6183		1	
LOOM, instrument board to dash (RC) assembly as above except		RD 6447	1		F
Cable, distribution board to connection, charging plug (additional)		RD 5749		1	
Cable, regulator 'E' to connector, charging plug (additional)		RD 5753		1	
Connector, male, charging plug (additional)		RD 5745		2	
Eye, cable, 3 BA (Lucas)		RD 3344		3	
Sleeve, rubber, cable eye		RD 7589		15	
Sleeving, 11mm, charging plug connector		RD 5761		1	
LOOM, instrument board to dash (LC) assembly consisting of		RD 5186	1		
Cable, distribution board '8' to coachbuilder's junction box		RD 3790		1	
Cable, clock to distribution board (-)		RD 3887		1	
Cable, front cigar lighter to distribution board '8'		RD 3895		1	
Cable, demister switch to distribution board '11'		RD 3896		1	
Cable, instrument board to dash		RD 3900		1	
Cable, wiper switch to 12 way junction box		RD 3915		1	
Cable, heater switch to 12 way junction box		RD 3917		1	
Cable, instrument light switch to distribution board '5'		RD 3920		1	
Cable, fuel/oil switch to 12 way junction box		RD 3921		1	
Cable, fuel/oil switch to 12 way junction box		RD 3922		1	
Cable, fuel warning light to 12 way junction box		RD 3924		1	
Cable, ignition warning light to regulator 'D'		RD 3926		1	
Cable, demister switch to 12 way junction box		RD 5187		1	
Cable, speedo warning light to coach builder's junction box		RD 4849		1	
Cable, fog lamp switch to 12 way junction box		RD 5188		1	
Cable, fog lamp switch to distribution board '5'		RD 5189		1	
Cable, ammeter to regulator 'A1'		RD 6003		1	
Cable, ammeter to distribution board '8'		RD 6004		1	
Eye, cable, 3 BA, (Lucas)		RD 3344		2	
Eye, cable, 5 BA, clock		RD 3406		1	
Eye, cable, 3 BA, (Dowler)		RD 3690		10	
Eye, cable, cigar lighter, (Smith)		RD 3956		1	
Eye, cable, 2 BA, (Dowler)		RD 3533		1	
Sleeve, rubber, cable eyes		RD 7589		14	
Sleeving, 30 mm		RD 6117		1	

GROUP Q20. (Continued overleaf)

GROUP Q20. WIRING, LOW TENSION AND FITTINGS (Continued)

	REF. NO.	PART NO.	QUANTITY GROUP	QUANTITY ASS'LY	NOTES
LOOM, assembly rear (RC), consisting of		RD 5464	1		M
Cable, distribution board '5' to rear junction box (tail lamp)		RD 3873		1	
Cable, distribution board '6' to body junction box companion		RD 3819		1	
Cable, distribution board '6' to reverse lamp switch		RD 3803		1	
Cable, distribution board '8' to body junction box cigar		RD 3792		1	
Cable, distribution board '11' to petrol pumps 'A' and 'B'		RD 3802		1	
Cable, distribution board (-) to body junction box, roof light		RD 3815		1	
Cable, 12 way junction box to body junction box, heater		RD 3809		1	
Cable, 12 way junction box to body junction box, (trafficator L.H)		RD 3805		1	
Cable, 12 way junction box to body junction box, (trafficator R.H)		RD 3806		1	
Cable, 12 way junction box to fuel tank		RD 3881		1	
Cable, 12 way junction box to fuel tank		RD 3883		1	
Cable, reverse lamp switch to stop/tail lamp switch		RD 3804		1	
Cable, reverse lamp switch to tail junction box		RD 3866		1	
Cable, stop light switch to tail junction box		RD 3867		1	
Eye, cable, 2 BA, (Lucas)		RD 3346		1	
Eye, cable, 2 BA, (Dowler)		RD 3533		1	
Eye, cable, 3 BA, (Dowler)		RD 3690		13	
Sleeve, rubber, cable eye		RD 7589		15	
Sleeving, 18 mm		RD 3087		1	
Sleeving, 11 mm, 2nd crossmember to rear junction box		RD 3091		1	
Sleeving, 11 mm, petrol tank unit		RD 3092		1	
Sleeving, 11 mm, stop and reverse lamp switch body		RD 3094		2	
Sleeving, 14 mm, main trunk to body junction box		RD 5053		1	
Sleeving, 14 mm, main trunk to 2nd crossmember		RD 3090		1	
LOOM, assembly, rear (RC) as above, except		RD 7506	1		N
Cable, 12 way junction box to petrol tank unit (replaces RD.3881)		RD 7501		1	
Cable, 12 way junction box to petrol tank unit (replaces RD.3883)		RD 6250		1	
Sleeving, 14 mm, main trunk to 2nd crossmember (replaces RD.3090)		RD 7502		1	
Sleeving, 11 mm, rear junction box to 2nd cross member (replaces RD.3091)		RD 7503		1	
Sleeving, 2nd crossmember, petrol tank unit (replaces RD.3092)		RD 7504		1	
LOOM, assembly, rear (LC), consisting of		RD 5061	1		M
Cable, distribution board '8' to body junction box (cigar)		RD 3792		1	
Cable, distribution board '11' to petrol pumps 'A' and 'B'		RD 3802		1	
Cable, 12 way junction box to body junction box (trafficator L.H)		RD 3805		1	

GROUP Q20. (Continued overleaf)

GROUP Q20. WIRING, LOW TENSION AND FITTINGS (Continued)

	REF. NO.	PART NO.	QUANTITY GROUP	QUANTITY ASS'LY	NOTES
LOOM, assembly, rear (LC), consisting of (Continued)					
Cable, 12 way junction box to body junction box (trafficator R.H)		RD 3806		1	
Cable, 12 way junction box to body junction (heater)		RD 3809		1	
Cable, distribution board (-) to body junction box (roof light)		RD 3815		1	
Cable, body junction box reverse lamp to tail junction box		RD 5055		1	
Cable, body junction box, stop lamp to tail junction box		RD 5056		1	
Cable, distribution board '5' to tail junction box		RD 3873		1	
Cable, 12 way junction box to petrol tank unit		RD 3881		1	
Cable, 12 way junction box to petrol tank unit		RD 3883		1	
Cable, distribution board '6' to 6 way junction box (stop lamp switch)		RD 5028		1	
Eye, cable, 3 BA, (Dowler)		RD 3680		7	
Eye, cable, 2 BA, (Lucas)		RD 3846		1	
Eye, cable, 2 BA, (Dowler)		RD 3533		1	
Sleeve, rubber, cable eye		RD 7589		9	
Sleeving, 18 mm, main trunk dash to rear		RD 5052		1	
Sleeving, 14 mm, main trunk to 2nd crossmember		RD 3090		1	
Sleeving, 11 mm, 2nd crossmember to tail junction box		RD 3091		1	
Sleeving, 14 mm, trunk to R.H. body junction box		RD 5053		1	
Sleeving, 11 mm, trunk to L.H. body junction box		RD 5054		1	
Sleeving, 11 mm, petrol tank unit		RD 3082		1	
LOOM, assembly, rear (LC) as above, except		RD 7505	1		N
Cable, 12 way junction box to petrol tank unit (replaces RD.3881)		RD 7501		1	
Cable, 12 way junction box to petrol tank unit (replaces RD.3925)		RD 6248		1	
Sleeving, 14 mm, main trunk to 2nd crossmember (replaces RD.3090)		RD 7502		1	
Sleeving, 11 mm, 2nd crossmember to rear junction box (replaces RD.3091)		RD 7503		1	
Sleeving, petrol tank unit (replaces RD.3092)		RD 7504		1	
LOOM, valance plate, L.H. assembly (RC) consisting of		RD 5462	1		
Cable, 12 way junction box to L.H. front junction box (horn)		RD 5035		1	
Cable, footswitch, to L.H. front junction box (dip)		RD 5244		1	
Cable, footswitch, to L.H. front junction box (head)		RD 5243		1	
Cable, distribution board '5' to L.H. front junction box (side)		RD 5034		1	
Eye, cable, 3 BA, (Dowler)		RD 3680		3	
Sleeve, rubber, cable eye		RD 7589		3	
Sleeving, 14 mm, dash to L.H. valance plate		RD 5458		1	

GROUP Q20. (Continued overleaf)

GROUP Q20. WIRING, LOW TENSION AND FITTINGS (Continued)

	REF. NO.	PART NO.	QUANTITY GROUP	QUANTITY ASS'LY	NOTES
LOOM, valance plate, L.H. assembly, (LC), consisting of	RD 5030		1		
Cable, footswitch to L.H. front junction box (head)	RD 5032			1	
Cable, footswitch to L.H. front junction box (head)	RD 5033			1	
Cable, distribution board '5' to L.H. front junction box (side)	RD 5034			1	
Cable, 12 way junction box, to L.H. front junction box horn	RD 5035			1	
Cable, distribution board '8' to L.H. front junction box (horn relay)	RD 5036			1	
Cable, L.H. front junction box horn relay to horn button	RD 5166			1	
Eye, cable, (Dowler)	RD 3690			4	
Sleeve, rubber	RD 7589			4	
Sleeving, 14 mm, L.H. valance plate	RD 5031			1	
Sleeving, 5 mm, valance plate to steering column	RD 5163			1	
LOOM, valance plate, R.H. assembly (RC) consisting of	RD 6632		1		
Cable, footswitch to R.H. front junction box (head)	RD 5234			1	
Cable, footswitch to R.H. front junction box (dip)	RD 5235			1	
Cable, coachbuilder's junction box to R.H. front junction box head	RD 4859			1	
Cable, distribution board '5' to R.H. front junction box (side)	RD 6042			1	
Cable, 12 way junction box to R.H. front junction box (horn)	RD 6039			1	
Cable, 12 way junction box to R.H. front junction box (fog)	RD 5042			1	
Cable, regulator 'F' to dynamo 'F'	RD 6079			1	
Cable, regulator 'D' to dynamo 'D'	RD 6078			1	
Cable, 12 way junction box to oil sump unit	RD 6087			1	
Cable, distribution board '8' to horn relay	RD 3791			1	
Cable, horn relay to horn push button	RD 3811			1	
Cable, horn relay to front junction box (horn)	RD 6045			1	
Cover, terminal, dynamo 'D'	RD 3105			1	
Cover, terminal, dynamo 'F'	RD 3106			1	
Eye, cable, 3 BA, (Dowler)	RD 3690			7	
Eye, cable, .312" dia., (Lucas)	RD 3345			1	
Eye, cable, 2 BA	RD 6081			1	
Eye, cable, 4 BA (Lucas)	RD 3534			1	
Sleeve, rubber	RD 7589			7	
Sleeving, 18 mm, R.H. valance plate	RD 6212			1	
Sleeving, 5 mm, oil sump unit	RD 6084			1	
Sleeving, 5 mm, steering column to horn relay	RD 6085			1	
Sleeving, 11 mm, oil sump unit and dynamo	RD 6086			1	
LOOM, valance plate, .R.H assembly (LC) consisting of	RD 5037		1		F
Cable, footswitch to R.H. front junction box (head) (white)	RD 5039			1	
Cable, footswitch to R.H. front junction box (head) (pink)	RD 5040			1	
Cable, coachbuilder's junction box to R.H. junction box (head)	RD 4859			1	
Cable, distribution board '5' to R.H. front junction box (side)	RD 6042			1	

GROUP Q20. (Continued overleaf)

GROUP Q20. WIRING, LOW TENSION AND FITTINGS (Continued)

LOOM, valance plate R.H. assembly (LC) consisting of (Continued)				
Cable, 12 way junction box to R.H. front junction box (horn)	RD 6039		1	
Cable, main face to starter relay	RD 5041		1	
Cable, 12 way junction box to R.H. front junction box (fog)	RD 5042		1	
Cable, regulator, 'F' to dynamo 'F'	RD 6079		1	
Cable, regulator, 'D' to dynamo 'D'	RD 6078		1	
Cable, 12 way junction box to oil sump unit	RD 6087		1	
Cable, 12 way junction box to starter relay 'H'	RD 5043		1	
Cover, terminal, dynamo 'D'	RD 3105		1	
Cover, terminal, dynamo 'F'	RD 3106		1	
Eye, cable, 3 BA, (Dowler)	RD 3690		4	
Eye, cable, 3 BA, (Lucas)	RD 3344		1	
Eye, cable, starter solenoid switch	RD 3103		1	
Eye, cable, 2 BA	RD 6081		1	
Eye, cable, .312" dia., (Lucas)	RD 3345		1	
Sleeve, rubber, cable eyes	RD 7589		7	
Sleeving, 18 mm, R.H. valance plate	RD 5038		1	
Sleeving, 11 mm, dynamo	RD 6086		1	
Sleeving, 5 mm, oil sump unit	RD 6084		1	
LOOM, valance plate, R.H. assembly (LC) as above except	RD 6430	1		G
Cable, distribution board (-) to starter relay (additional)	RD 5521		1	
Cable, 12 way junction box to starter relay 'H' (replaces RD.5043)	RD 5523		1	
Eye, cable, starter relay switch (additional)	RD 5801		1	
Eye, cable, 2 BA	RD 6081		2	

The following parts have been deleted:-

Cable, main fuse to starter relay RD.5041
Eye, cable, starter solenoid switch RD.3103
Eye, cable, 2 BA, RD.6081

LOOM, assembly, switchbox to dash (LC) consisting of	RD 5190	1		Q
Cable, switchbox (-) to distribution board (-)	RD 5192		1	
Cable, switchbox '2' to regulator 'A'	RD 5193		1	
Cable, switchbox '8' to distribution board '8'	RD 5194		1	
Cable, switchbox '11' to distribution board '11'	RD 5195		1	
Cable, switchbox '4' to 12 way junction box	RD 5196		1	
Cable, switchbox '5' to distribution board '5'	RD 5197		1	
Cable, switchbox '6' to distribution board '6'	RD 5198		1	
Cable, switchbox '10' to 12 way junction box	RD 5199		1	
Cable, trafficator switch to distribution board '6'	RD 5200		1	
Cable, trafficator switch L.H. to 12 way junction box	RD 5201		1	
Cable, trafficator switch R.H. to 12 way junction box	RD 5202		1	
Cable, earth, charging plug to regulator 'E'	RD 5203		1	
Cable, charging plug to distribution board	RD 5204		1	

GROUP Q20. (Continued overleaf)

GROUP Q20. WIRING, LOW TENSION AND FITTINGS (Continued)

LOOM, assembly, switchbox to dash (LC) consisting of (Continued)			
Eye, cable, 3 BA (Dowler)	RD 3690	7	
Sleeve, rubber, cable eye	RD 7589	17	
Sleeving, 30 mm, switchbox to dash	RD 5191	1	
LOOM, assembly, switchbox to dash (LC) as above, except	RD 6449	1	R
Eye, cable, 3 BA, (Lucas)	RD 3344	7	
Sleeve rubber, cable eye	RD 7589	14	

The following pieces are no longer used:-

Cable, earth, charging plug to regulator 'E' RD 5203
Cable, charging plug to distribution board RD 5204

LOOM, assembly, switchbox to dash (RC) consisting of	RD 6211	1	L
Cable, switchbox '11' to distribution board '11'	RD 6173	1	
Cable, switchbox '4' to 12 way junction box	RD 6174	1	
Cable, switchbox '5' to distribution board '5'	RD 6175	1	
Cable, switchbox '6' to distribution board '6'	RD 6176	1	
Cable, switchbox '10' to 12 way junction box	RD 6177	1	
Cable, trafficator switch to distribution board '6'	RD 3908	1	
Cable, trafficator switch L.H. to 12 way junction box	RD 3913	1	
Cable, trafficator switch R.H. to 12 way junction box	RD 3914	1	
Cable, charging plug to distribution board	RD 6179	1	
Cable, charging plug to regulator 'E'	RD 6178	1	
Cable, switchbox '8' to distribution board '8'	RD 6180	1	
Cable, switchbox (-) to distribution board (-)	RD 6181	1	
Cable, switchbox '2' to regulator 'A1'	RD 6182	1	
Eye, cable, 3 BA, (Lucas)	RD 3344	10	
Eye, cable, 3 BA, (Dowler)	RD 3690	7	
Sleeve, rubber, cable eye	RD 7589	17	
Sleeving, 30 mm, switchbox to dash	RD 6172	1	
LOOM, assembly, switchbox to dash (RC) as above except	RD 6448	1	K
Eye, cable, 3 BA (Lucas)	RD 3344	7	
Sleeve, rubber	RD 7589	14	

The following parts are no longer used:-

Cable, charging plug to distribution board RD 6179
Cable, charging plug to regulator 'E' RD 6178

LOOM, assembly, dashboard (RC) consisting of	RD 5461	1	F
Cable, distribution board 'H' to ignition coil	RD 5025	1	
Cable, 12 way junction box to wiper motor	RD 5026	1	
Cable, 12 way junction box to demister blower	RD 5159	1	
Cable, earth, demister blower	RD 5162	1	

GROUP Q20. (Continued overleaf)

GROUP Q20. WIRING, LOW TENSION AND FITTINGS (Continued)

LOOM, assembly, dashboard (RC) consisting of (Continued)

Cable, 12 way junction box to footswitch	RD 5233	1	
Cable, distribution board (-) to starter relay	RD 5456	1	
Cable, 12 way junction box to starter relay 'H'	RD 5457	1	
Cover, terminal, starter relay 'H'	RD 3106	1	
Eye, cable, 3 BA, (Lucas)	RD 3344	1	
Eye, cable, starter solenoid switch	RD 3103	1	
Eye, cable, 2 BA, (Dowler)	RD 3533	1	
Eye, cable, 3 BA, (Dowler)	RD 3690	2	
Eye, cable, .312" dia., (Lucas)	RD 3345	1	
Sleeving, 18 mm, dashboard	RD 5021	1	
Sleeving, 7 mm, demister blower	RD 5022	1	
Sleeving, 5 mm, ignition coil	RD 5023	1	
Sleeving, 5 mm, wiper motor	RD 5024	1	
Sleeving, 5 mm, horizontal sleeve to demister	RD 5245	1	
Sleeving, 11 mm, footswitch	RD 5232	1	
Sleeve, rubber, cable eye	RD 7589	6	
LOOM, assembly, dashboard (RC) as above except	RD 6428	1	O
Cable, distribution board (-) to starter relay (replaces RD 5456)	RD 5520	1	
Cable, 12 way junction box to starter relay 'H' (replaces RD 5457)	RD 5522	1	
Eye, cable, starter solenoid switch (additional)	RD 5801	1	
Eye, cable, starter solenoid 'H' (additional)	RD 6081	1	
Sleeve, rubber	RD 7589	6	

The following piece is no longer used:-

Eye, cable, starter solenoid switch RD.3103

LOOM, assembly, dashboard (RC) as above except	RD 6764	1	P
Cable, 12 way junction box to demister blower (replaces RD.5159)	RD 5954	1	
Cable, earth, demister blower (replaces RD 5162)	RD 5953	1	
Sleeving, 7 mm, dash trunk to demister (additional)	RD 5952	1	
Sleeving, 5 mm, demister blower (additional)	RD 5951	1	

The following parts are no longer used:-

Sleeving, 7 mm, demister blower RD 5022
Sleeving, 5 mm, horizontal sleeve to demister blower RD 5245

LOOM, assembly, dashboard (LC) consisting of	RD 5020	1	Q
Cable, distribution board '11' to ignition coil	RD 5025	1	
Cable, 12 way junction box to wiper motor	RD 5026	1	
Cable, 12 way junction box to footswitch (supply)	RD 5027	1	
Cable, 12 way junction box to demister blower	RD 5159	1	
Cable, earth, demister, blower	RD 5162	1	
Eye, cable, 2 BA (Dowler)	RD 3533	1	
Eye, cable, 3 BA (Dowler)	RD 3690	2	
Eye, cable, .312" dia., (Lucas)	RD 3345	1	

GROUP Q20. (Continued overleaf)

GROUP Q20. WIRING, LOW TENSION AND FITTINGS (Continued)

	REF. NO.	QUANTITY GROUP	QUANTITY ASS'LY	NOTES
LOOM, assembly, dashboard (LC) consisting of (Continued)				
Sleeve, rubber, cable eye	RD 7589		4	
Sleeving, 5 mm, wiper motor	RD 5024		1	
Sleeving, 5 mm, horizontal sleeve to demister blower	RD 5245		1	
Sleeving, 7 mm, demister blower	RD 5022		1	
Sleeving, 5 mm, ignition coil	RD 5023		1	
Sleeving, 18 mm, dashboard	RD 5021		1	
LOOM, assembly, dashboard (LC) as above except	RD 6451	1		S
Cable, distribution board to connector (charging plug)(additional)	RD 5748		1	
Cable, regulator 'E' to connector (charging plug) (additional)	RD 5752		1	
Connector, male, cables, charging plug	RD 5745		2	
Sleeving, 11 mm, connector (charging plug) (additional)	RD 5759		1	
Eye, cable, 3 BA, (Lucas) (additional)	RD 3344		1	
Sleeve, rubber, cable eye	RD 7589		5	
LOOM, assembly, dashboard (LC) as above except	RD 6765	1		P
Cable, 12 way junction box to demister blower (replaces RD.5159)	RD 5954		1	
Cable, earth, demister blower, (replaces RD.5162)	RD 5953		1	
Sleeving, 7 mm, dash trunk to demister (additional)	RD 5952		1	
Sleeving, 5 mm, demister blower (replaces RD.5245)	RD 5951		1	

The following piece is not longer used:-

Sleeving, 7 mm, demister blower RD 5022

LOOM, assembly, charging plug, consisting of	RD 5755/6A	1		F(RC) R(LC)
Cable, charging plug to connector (regulator E)	RD 5755		1	
Cable, charging plug to connector (distribution board)	RD 5756		1	
Connector, female	RD 5746		2	
Eye, cable, (Lucas)	RD 3344		2	
Sleeve, rubber	RD 7589		2	
Sleeve, rubber connector	RD 3305		2	
LOOM, assembly, cruciform (LC)	RD 5044	1		
Cable, 4 way to 6 way body junction boxes	RD 5167		1	
Cable, 4 way body junction box to stop lamp switch (white)	RD 5051		1	
Cable, 4 way body junction box to stop lamp switch (blue)	RD 5050		1	
Cable, stop lamp switch to reverse lamp switch	RD 5048		1	
Cable, reverse lamp switch to 4 way junction box	RD 5049		1	
Cable, 6 way body junction box, to 4 way junction box, car heater	RD 5182		1	
Cable, earth, 4 way junction box, car heater	RD 5183		1	

GROUP Q20. (Continued overleaf)

GROUP Q20. WIRING, LOW TENSION, AND FITTINGS (Continued)

LOOM, assembly, cruciform (LC) (Continued)

Eye, cable, 3 BA, (Dowler)	RD 3690	6
Sleeve, rubber, cable eye	RD 7589	6
Sleeving, 7 mm, 4 way junction box, car heater	RD 5181	1
Sleeving, 11 mm, reverse lamp switch	RD 5046	1
Sleeving, 11 mm, stop lamp switch	RD 5047	1
NUT, 2 BA, clip, heater sleeving (RC)	K 4006/Z	1
NUT, 3 BA, earth terminal valance plates	K 4304/Z	2
NUT, 3 BA, earth terminal valance plates	K 4005/Z	2
NUT, 2 BA, clip. wiring harness	K 4006/Z	18
SCREW, cheesehead, 3 BA, earth terminal valance plate	K 1813/Z	2
SCREW, cheese head, 2 BA, clips, R.H. valance plate(RC)	K 1904/Z	5
SCREW, cheesehead, 2 BA, clips, L.H. valance plate (RC)	K 1904/Z	3
SCREW, cheesehead, 2 BA, clips R.H. valance plate (LC)	K 1904/Z	5
SCREW, cheesehead, 2 BA, clips, L.H. valance plate (RC)	K 1904/Z	3
WASHER, F.S. 3 BA, earth terminal, valance plate	K 9005/Z	4
WASHER, F.S. 2 BA, clips sleeving, R.H valance plate(RC)	K 9006/Z	5
WASHER, F.S. 2 BA, clips sleeving, R.H. valance plate(LC)	K 9006/Z	3
WASHER, F.S. 2 BA, clip, sleeving, L.H. valance plate(RC)	K 9006/Z	3
WASHER, F.S. 2 BA, clip, sleeving, L.H. valance plate(LC)	K 9006/Z	5
WASHER, F.S. 2 BA, clip, heater sleeving (RC)	K 9006/Z	1
WASHER, F.S. 2 BA, clip, sleeving battery to switch	K 9006/Z	5
WASHER, F.S. 2 BA, clip, rear loom	K 9006/Z	12
WASHER, F.S. 2 BA, clip, body junction box to stop and reverse switch (LC)	K 9006/Z	10
WASHER, plain, 3 BA, earth terminal, valance plate	K 4441/Z	6

GROUP Q21. WIRING FOR STANDARD BODY

Comprising

CABLE, boot lamp switch to rear junction box	RD 4712	1
CABLE, cigar lighter rear to earth	RD 3982	1
CABLE, companion to earth	RD 3985	2
CABLE, companion switch to light	RD 3984	2
CABLE, door switch front to rear (Purple)	RD 4755	2
CABLE, door switch front to rear (Light Blue)	RD 4756	2
CABLE, earth, R.H. stop tail to rear junction box	RD 4830	1
CABLE, earth, L.H. stop tail to rear junction box	RD 4833	1
CABLE, earth, rear junction box	RD 4652	1
CABLE, earth, rear junction box to number plate (RC)	RD 4799	1
CABLE, earth, number plate to L.H. reverse lamp (LC)	RD 4720	1
CABLE, earth reverse lamp L.H. to R.H. (LC)	RD 4721	1
CABLE, earth, R.H. reverse lamp to rear junction box (LC)	RD 4722	1
CABLE, headlamp to front junction box	RD 4996	2
CABLE, heater junction box to earth (RC)	RD 5183	1
CABLE, junction box rear to R.H. reverse lamp (LC)	RD 4719	1
CABLE, junction box rear to R.H. reverse lamp (RC)	RD 4738	1
CABLE, junction box to number box R.H. (Illumination) (RC)	RD 4800	1
CABLE, junction box to number box L.H. (Illumination) (RC)	RD 4736	1

GROUP Q21. (Continued overleaf)

GROUP Q21. WIRING FOR STANDARD BODY (Continued)

CABLE, junction box to L.H. reverse lamp (RC)	RD 4737	1	
CABLE, number plate lamp to rear junction box (LC)	RD 4341	1	
CABLE, L.H. reverse lamp to rear junction box (LC)	RD 4718	1	
CABLE, roof light to earth	RD 4740	1	
CABLE, tail light R.H. to rear junction box	RD 4828	1	
CABLE, tail light L.H. to rear junction box	RD 4831	1	
CABLE, trafficator to earth	RD 3988	2	
CABLE, sidelamps to front junction box	RD 6051	2	
CABLE, stop light R.H. to rear junction box	RD 4829	1	
CABLE, stop light L.H. to rear junction box	RD 4832	1	
CLIP, wiring harness, 11 mm, fog lamp	RD 6206	2	
CLIP, wiring harness, 5 mm, fog lamp	RD 6207	4	
CLIP, spring, (11 mm, sleeve)	RD 3434		
CLIP, spring, (.750" dia., sleeve)	RD 7550		
CLIP, spring, (5 mm, sleeve)	RD 4257		
CLIP, screwed, .250" dia.	RD 6082		
CLIP, screwed, .500" dia.	RD 3041		
CLIP, screwed, .750" dia.	RD 7551		
CLIP, screwed, 1.375" dia.	RD 6169		
LOOM, assembly, body junction box to R.H. companion (RC), consisting of	RD 5226	1	
Cable, body junction box to cigar lighter R.H.	RD 3981		1
Cable, body junction box to companion light switch R.H.	RD 3983		1
Cable, body junction box to R.H. trafficator	RD 3987		1
Cable, body junction box to R.H. rear door switch	RD 4753		1
Cable, R.H. rear door switch to roof lamp	RD 4760		1
LOOM, assembly, body junction box to L.H. companion (RC), consisting of	RD 5408	1	
Cable, body junction box to L.H. trafficator	RD 3989		1
Cable, body junction box to car heater	RD 5406		1
Cable, body junction box to L.H. front door switch	RD 4754		1
Cable, L.H. front door switch to L.H. roof light switch (Purple)	RD 4757		1
Cable, L.H. front door switch to L.H. roof light switch (Light Blue)	RD 4758		1
Cable, L.H. rear door switch to roof light	RD 4759		1
LOOM, assembly, body junction box to R.H. companion (LC), consisting of	RD 5211	1	
Cable, body junction box to rear door switch	RD 4753		1
Cable, front door switch to R.H. roof light switch (Purple)	RD 4757		1
Cable, front door switch to R.H. roof light switch (Light Blue)	RD 4758		1
Cable, rear door switch to roof light	RD 4760		1
Cable, body junction box to R.H. trafficator	RD 3987		1
Cable, body junction box to cigar lighter	RD 3981		1
Cable, body junction box to R.H. companion switch	RD 3983		1

GROUP Q21. (Continued overleaf)

GROUP Q21. WIRING FOR STANDARD BODY (Continued)

LOOM, assembly, body junction box to L.H. companion (LC)	RD.5112	1	
Cable, body junction box to LH trafficator	RD.3989		1
Cable, body junction box to rear door switch	RD.4754		1
Cable, rear door switch to roof light	RD.4759		1
LOOM, assembly, R.H. to L.H. companion with	RD.5213	1	
Cable, R.H. to L.H. companion switch	RD.3986		1
LOOM, assembly, fog lamp, consisting of	RD.6594	1	
Cable, R.H. lamp connection to R.H. front junction box	RD.5176		1
Cable, L.H. lamp connection to R.H. front junction box	RD.5177		1
Cable, earthing R.H. fog lamp	RD.7598		1
Cable, earthing L.H. fog lamp	RD.7599		1
NUT, locking, 2 BA	K.4307/Z		
NUT, 3 BA, earthing terminals, twin fog lamps (RC)	K.4005/Z	2	
SCREW, 3 BA, earthing terminals twin fog lamps (RC)	K.1804/Z	2	
SCREW, cheesehead, fixing junction box rear	K.1807/Z	2	
SCREW, cheesehead, earth terminal junction box	K.1810/Z	1	
SCREW, cheesehead, earth terminal roof light and companion	K.1807/Z	3	
SCREW, 2 BA	K.1904/Z		
SLEEVING, 1 mm, R.H. stop tail lamp to rear junction box	RD.3523	1	
SLEEVING, 11mm. L.H. stop tail lamp to rear junction box	RD.3524	1	
SLEEVING, rear junction box to rear number plate (RC) (with RD.4588 number plate)	RD.3496	1	
SLEEVING, rear junction box to rear number plate (RC) (with RD.5677 number plate)	RD.6267	1	
SLEEVING, R.H. to L.H. number plate (RC)	RD.4620	1	
SLEEVING, heater junction box to earth	RD.5181	1	
SLEEVING, 1 mm, R.H. to L.H. reverse lamps	RD.4717	1	
WASHER, F.S. earthing terminal, twin fog lamps (RC)	K.9005/Z	2	
WASHER, F.S. fixing, junction box rear	K.9005/Z	2	
WASHER, F.S. earth terminals	K.9005/Z	8	
WASHER, F.S. 2 BA	K.9006/Z		
WASHER, plain, fixing junction box rear	K.4446/Z	2	
WASHER, plain, earth terminals	K.4446/Z	5	

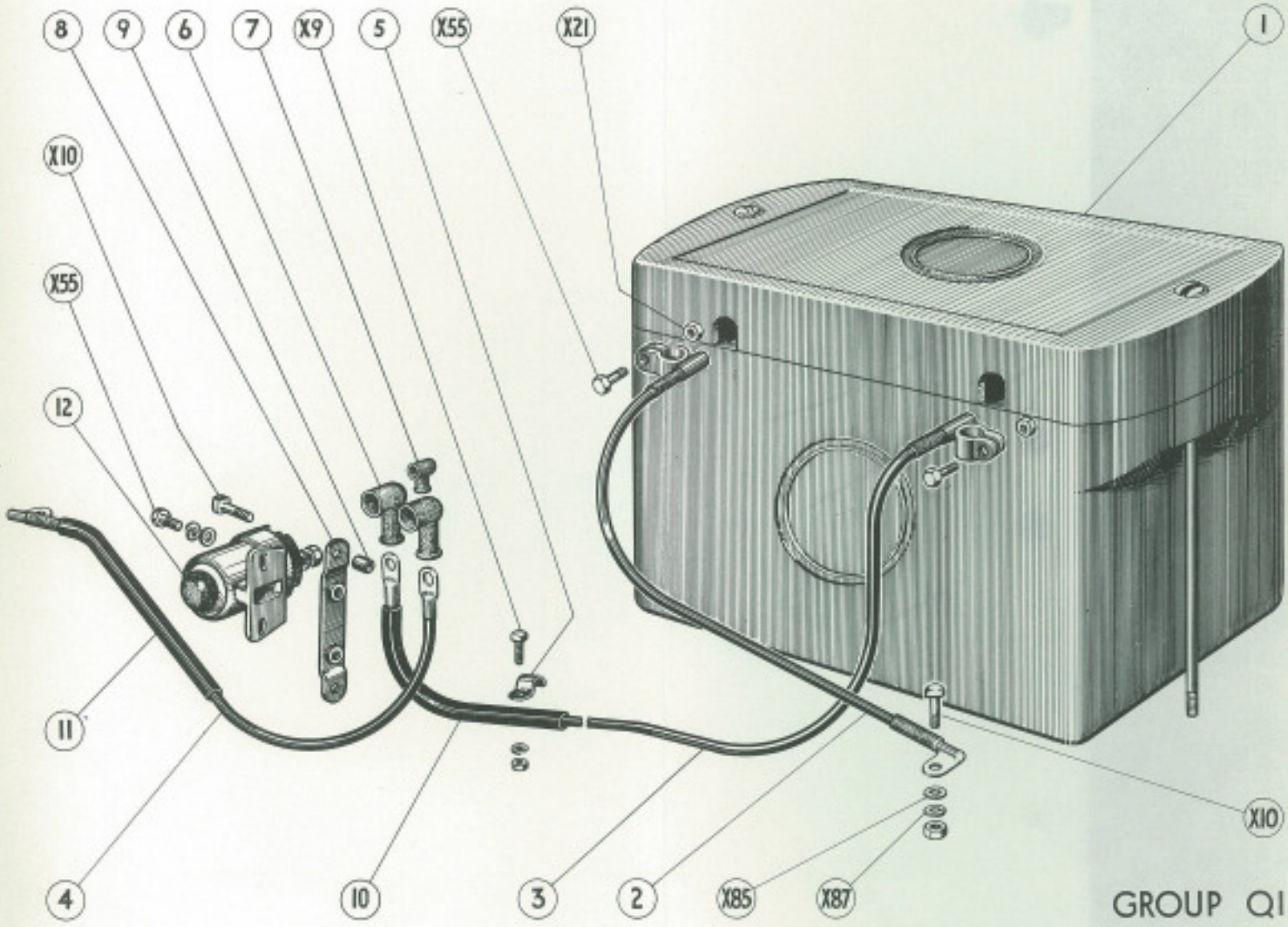

GROUP Q1

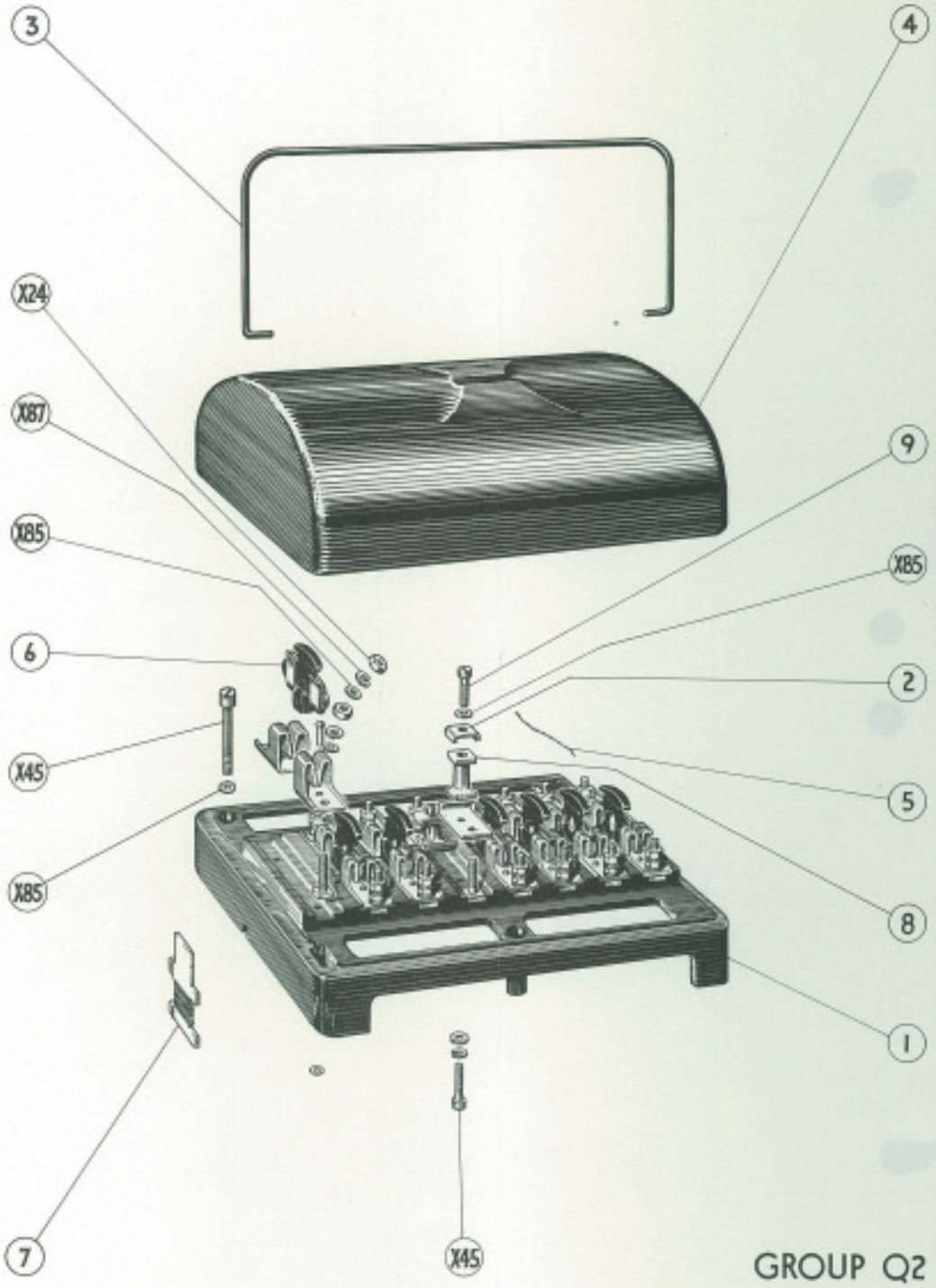

GROUP Q2

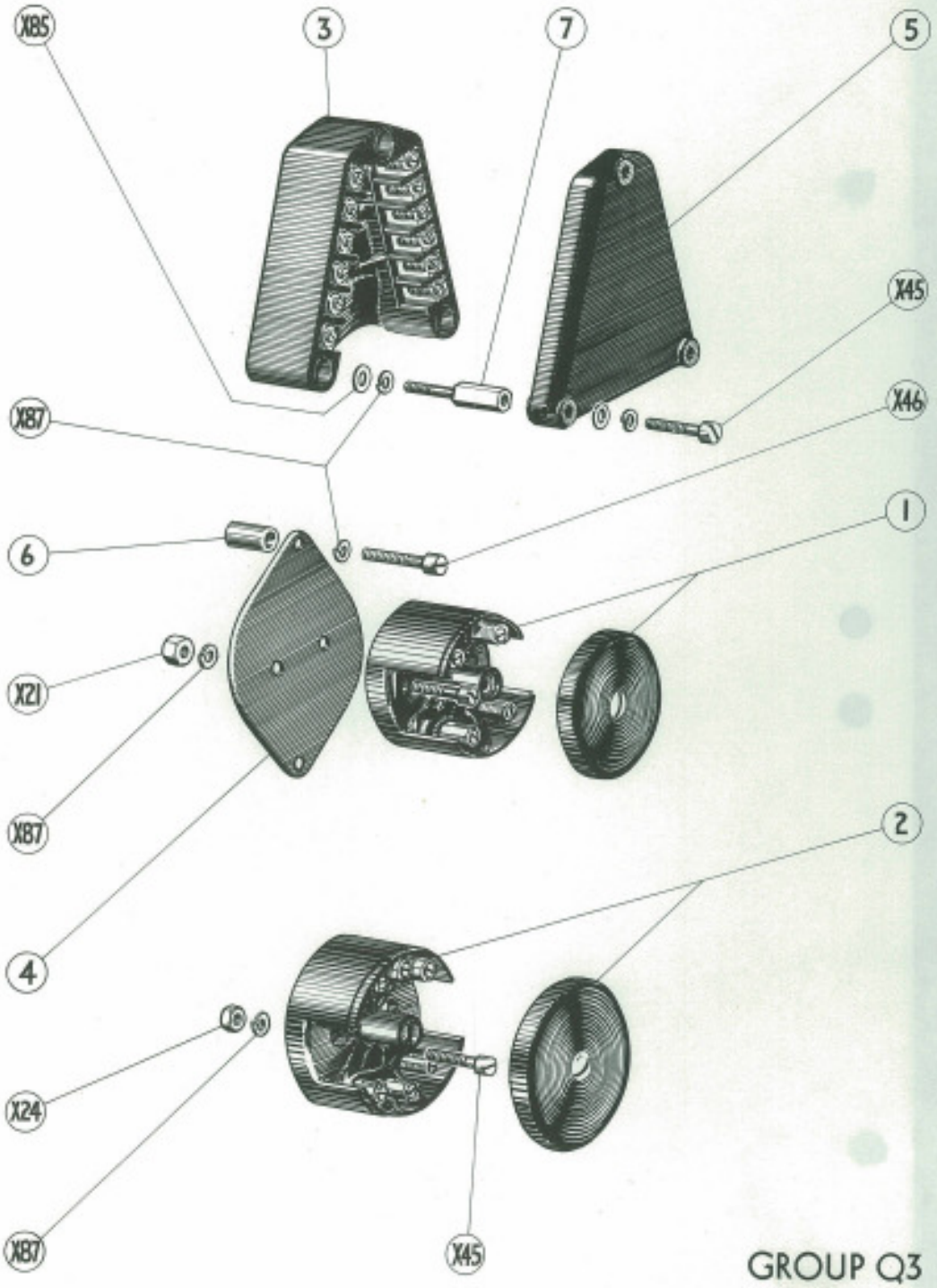

GROUP Q3

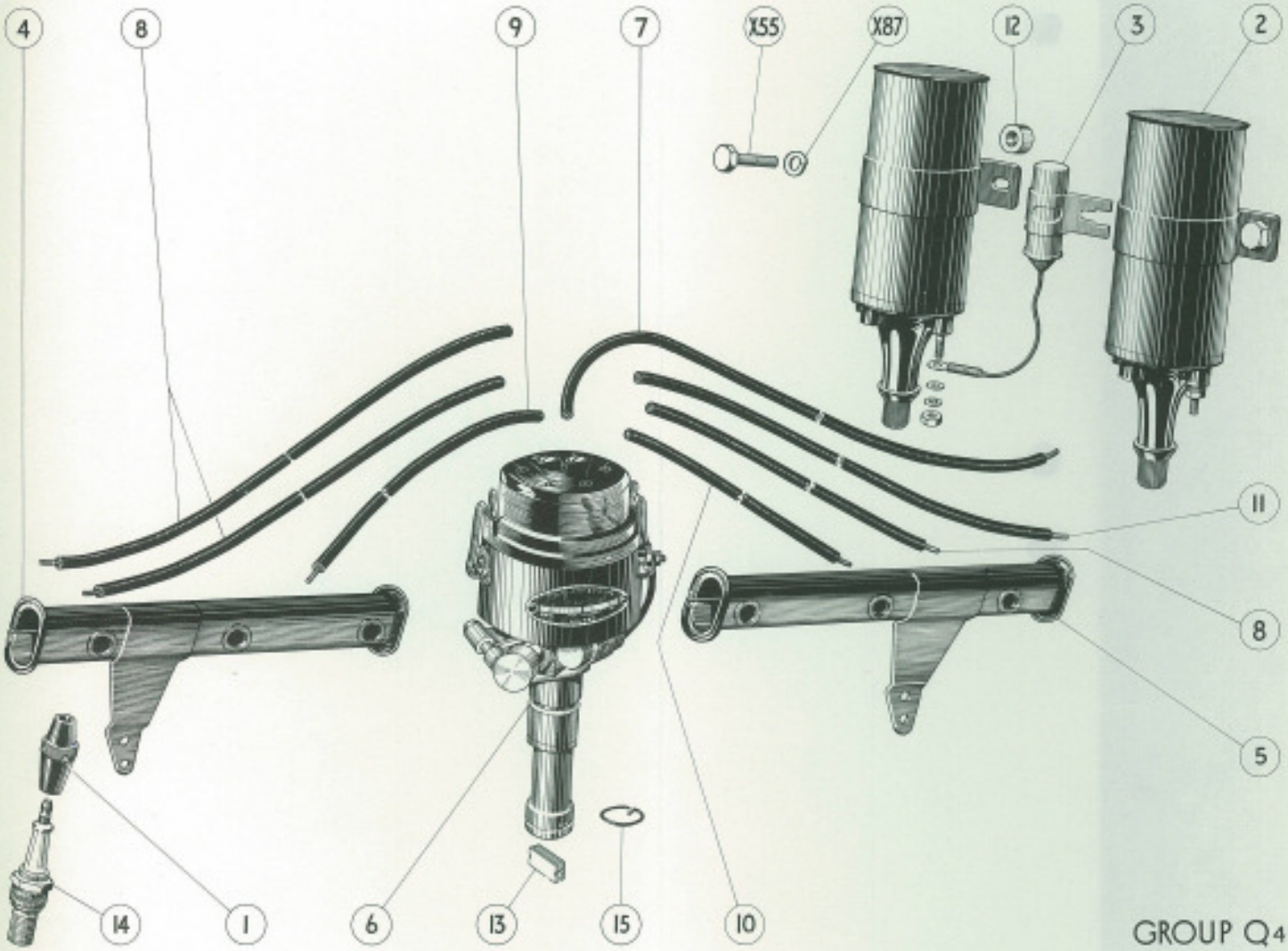

GROUP Q4

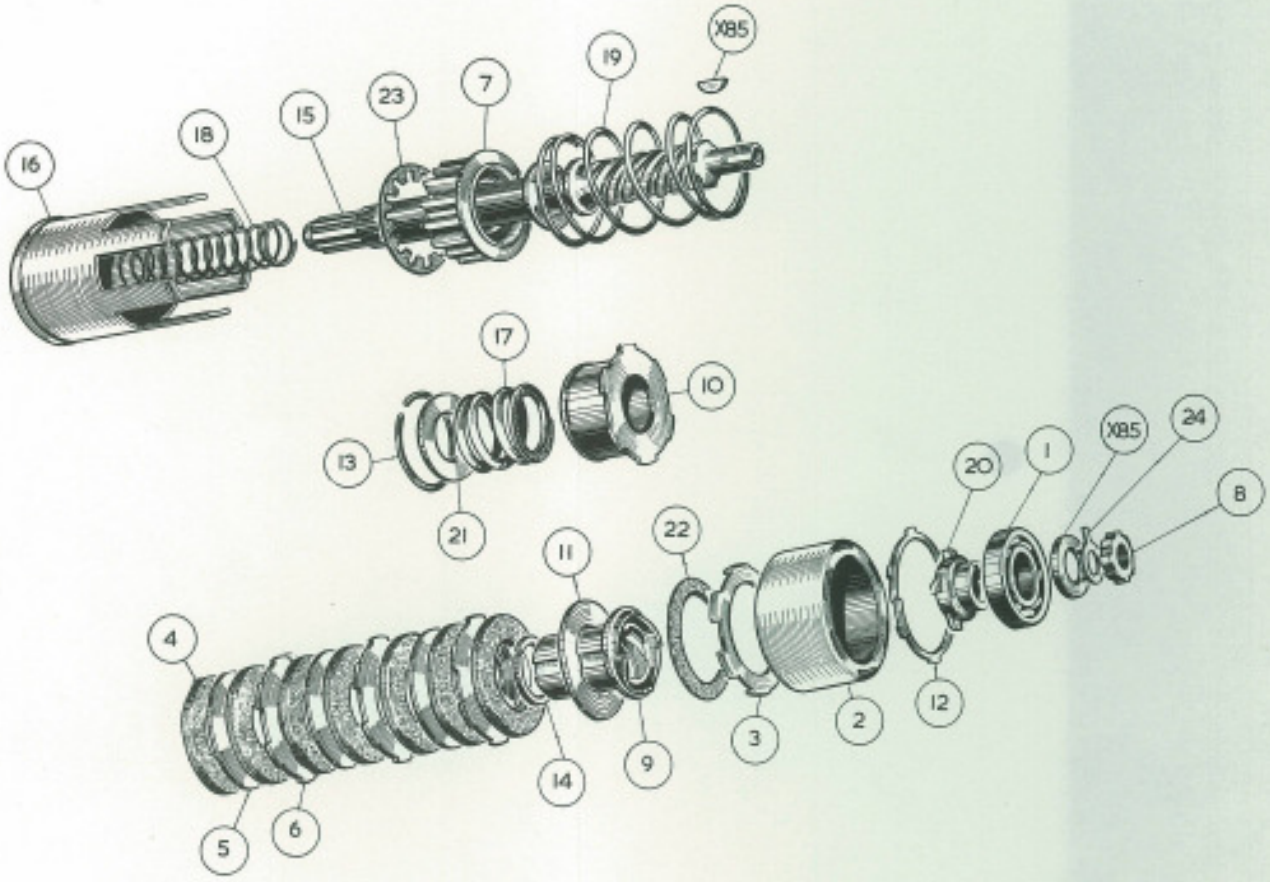

GROUP Q5

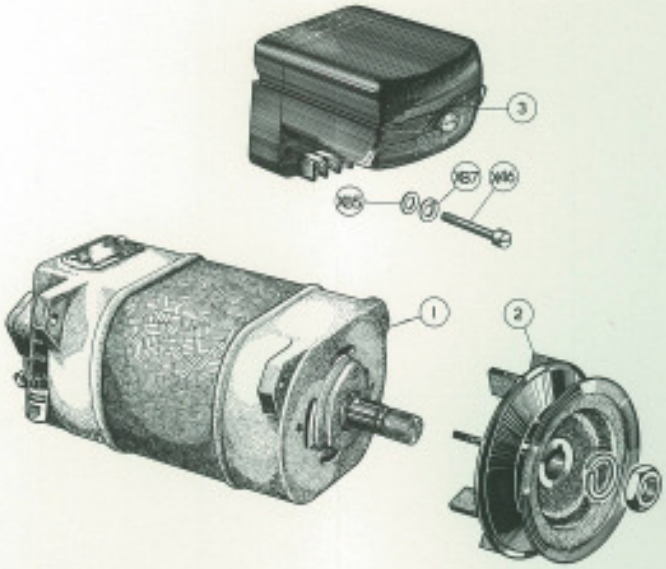

GROUP Q6

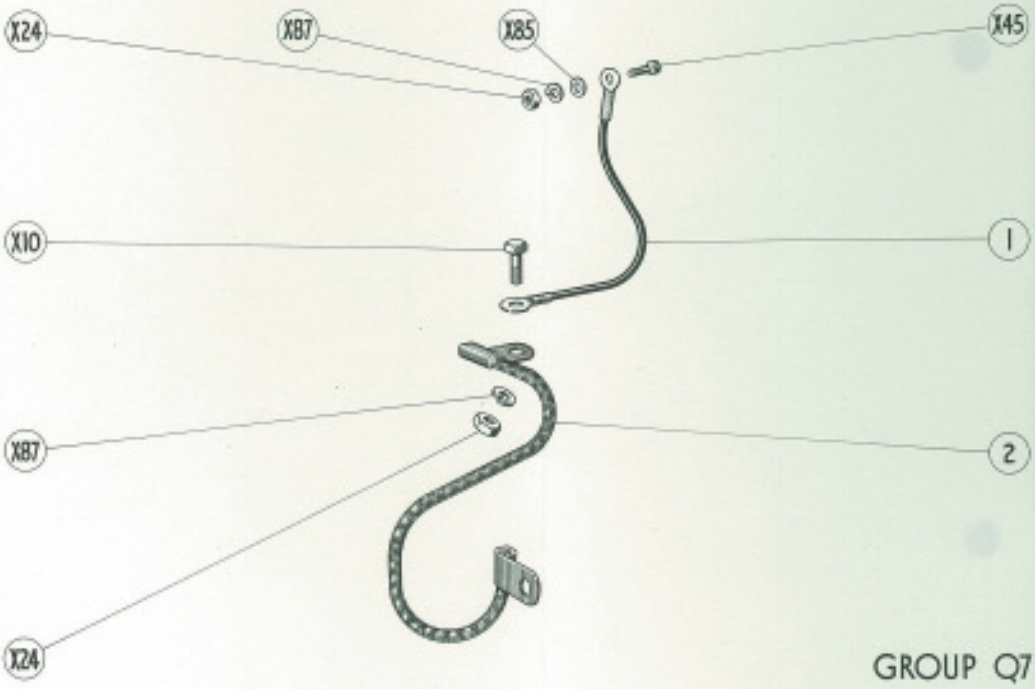

GROUP Q7

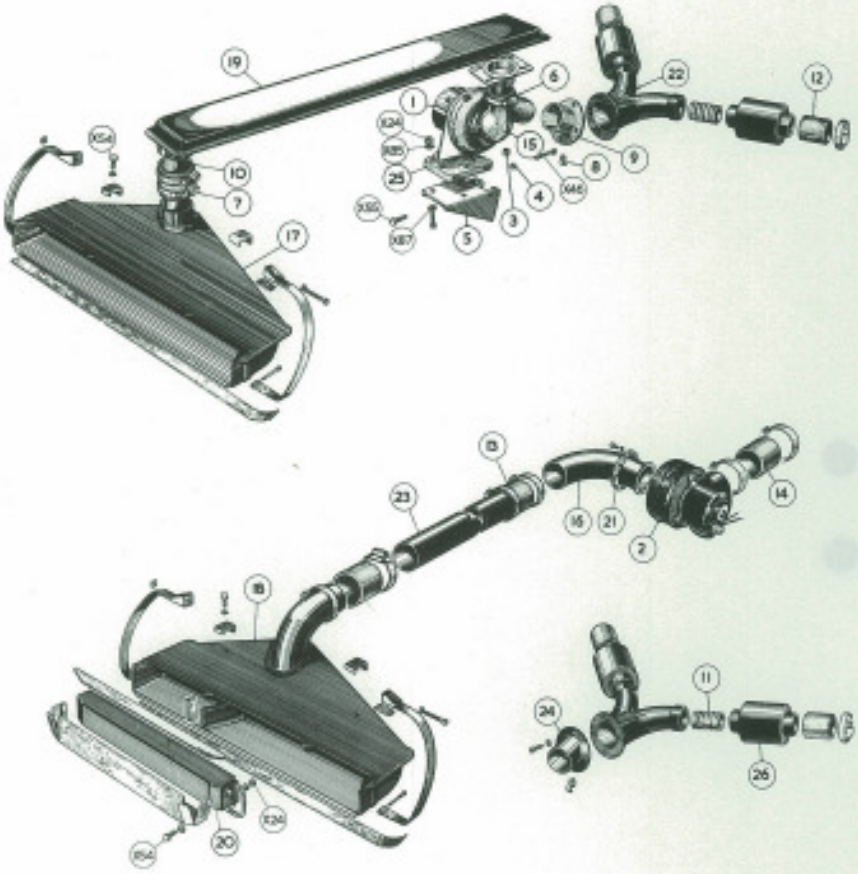
19
6
22
12
1
124
185
28
15
8
9
146
4
3
5
187
10
7
17
13
23
16
21
2
14
18
11
24
26
20
124
154

GROUP Q8A

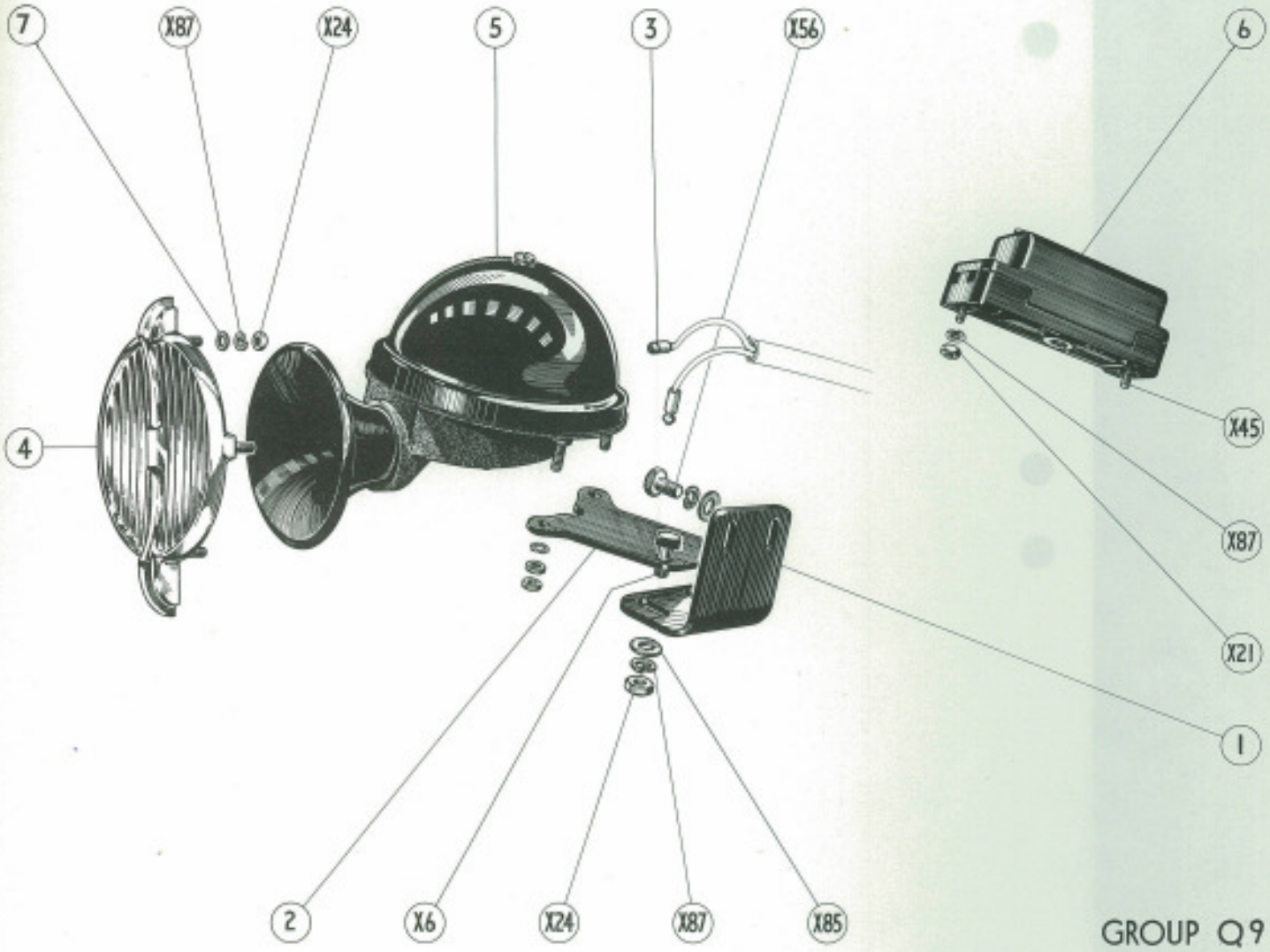

GROUP Q9

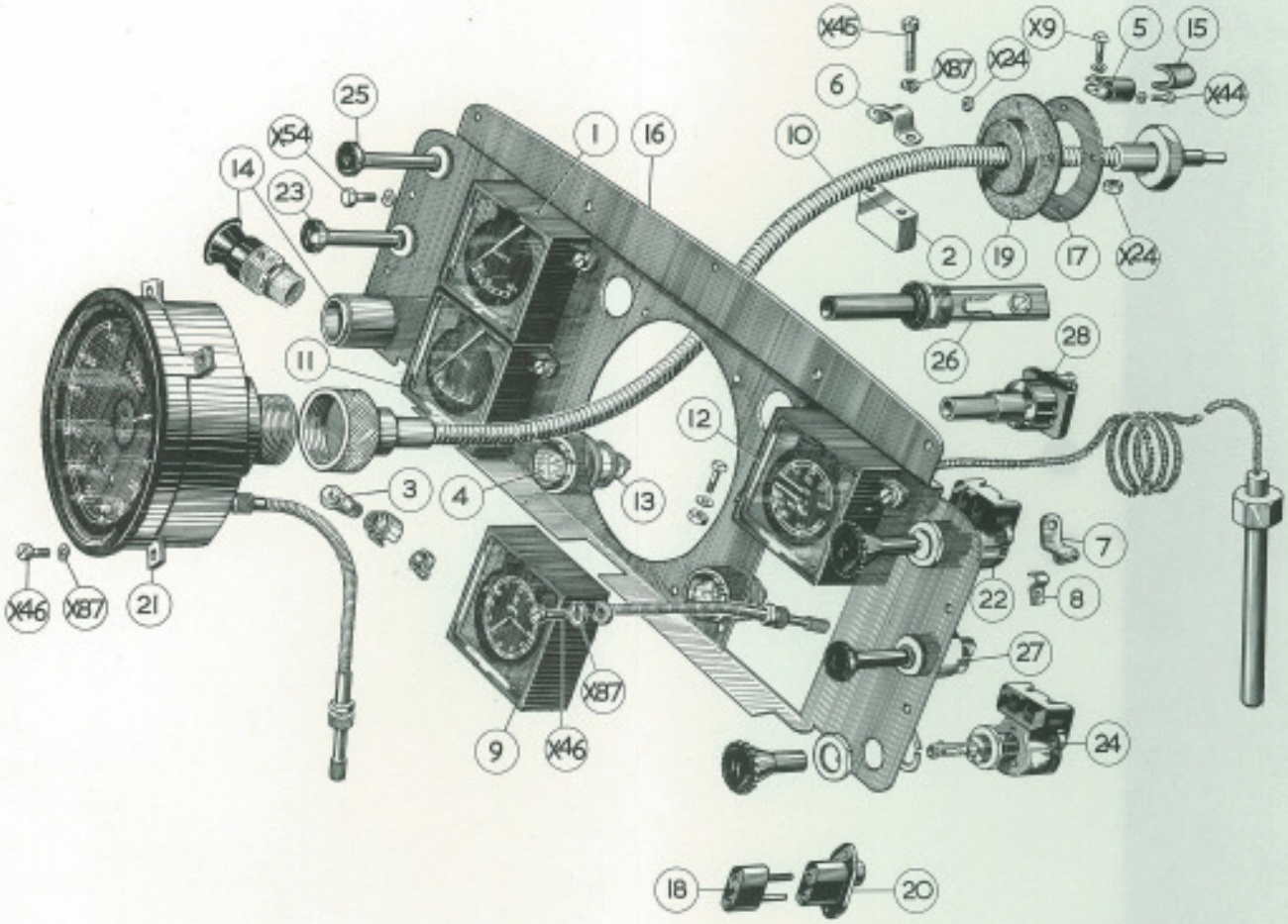
X46
X9
5
15
X87
X24
X44
6
25
X54
1
16
10
14
23
2
19
17
X24
26
28
11
12
3
4
13
7
X46
X87
21
22
8
27
X87
9
X46
24
18
20

GROUP Q10

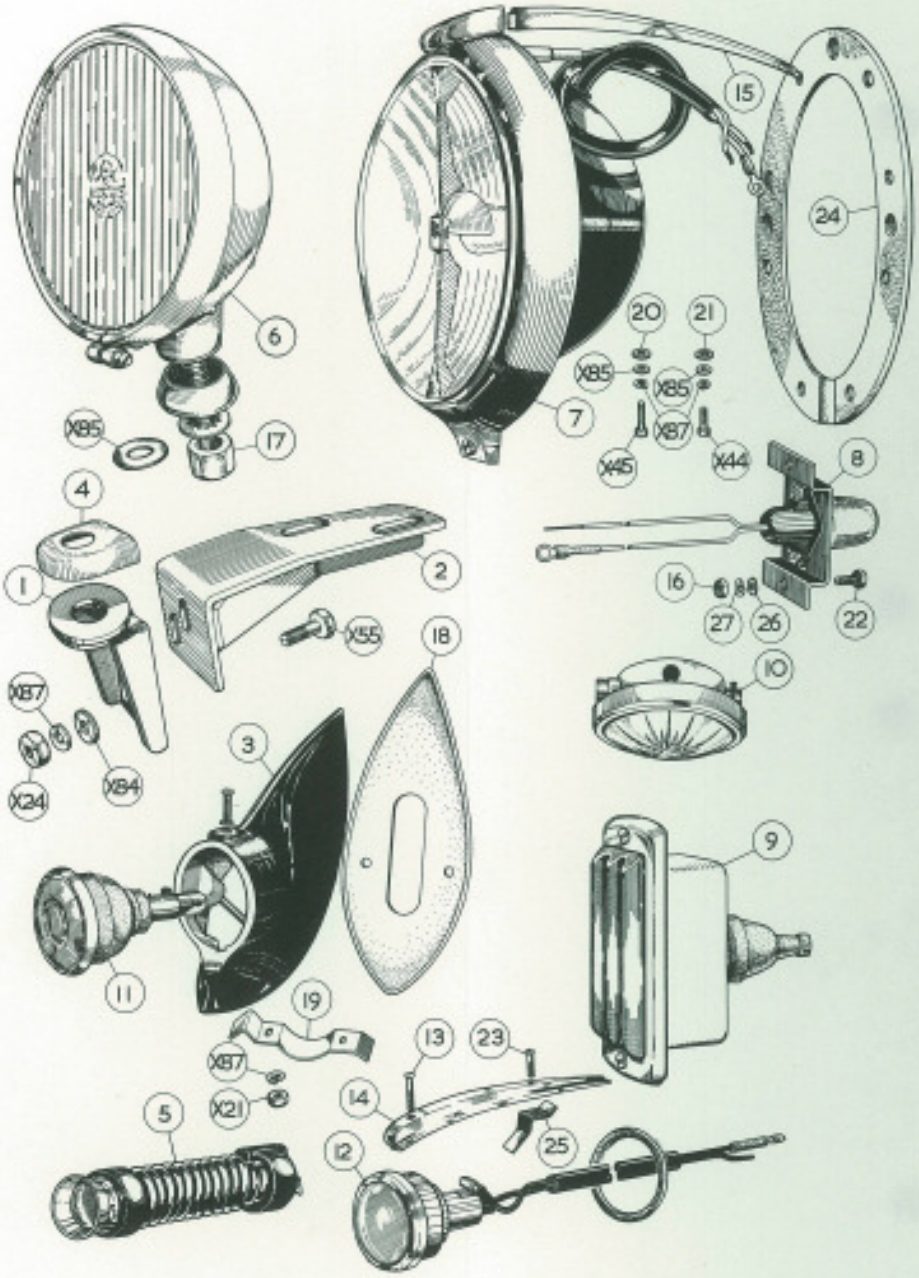
1
2
3
4
5
6
7
8
9
10
11
12
13
14
15
16
17
18
19
20
21
22
23
24
25
26
27
X85
X85
X85
X87
X45
X44
X85
X55
X87
X84
X24
X87
X21

GROUP Q II

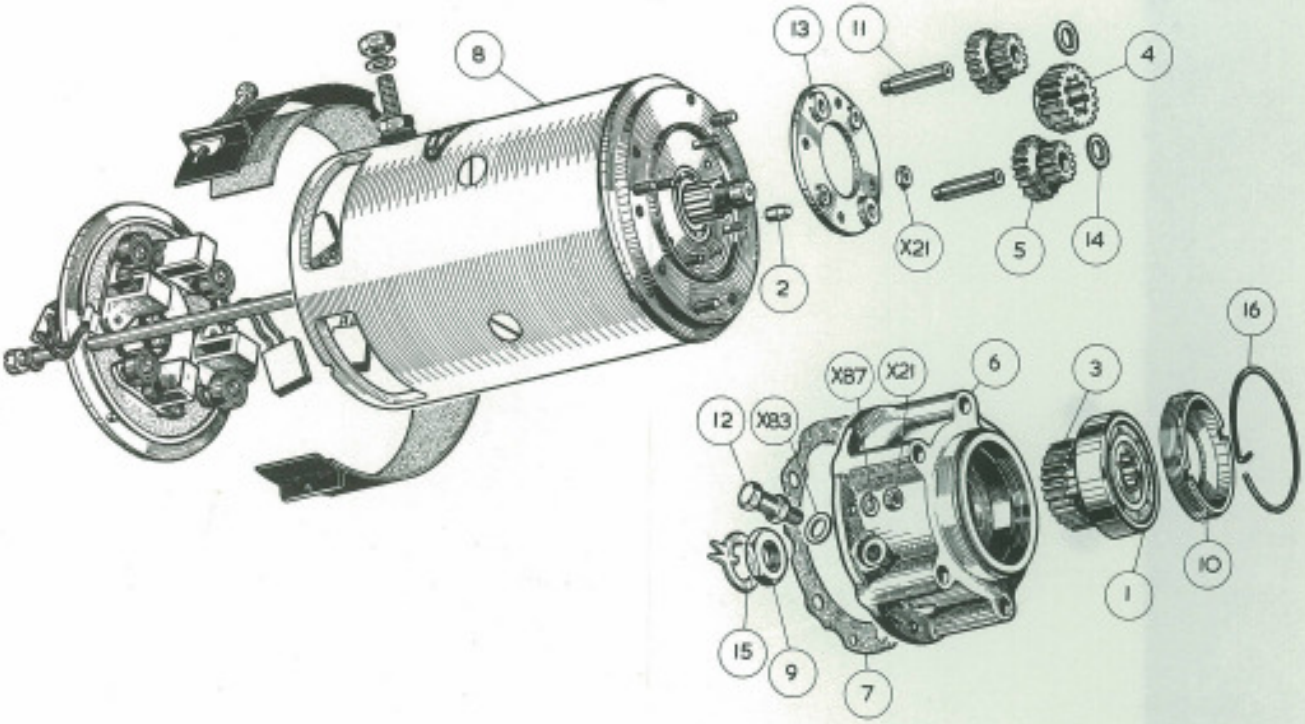

GROUP Q 12

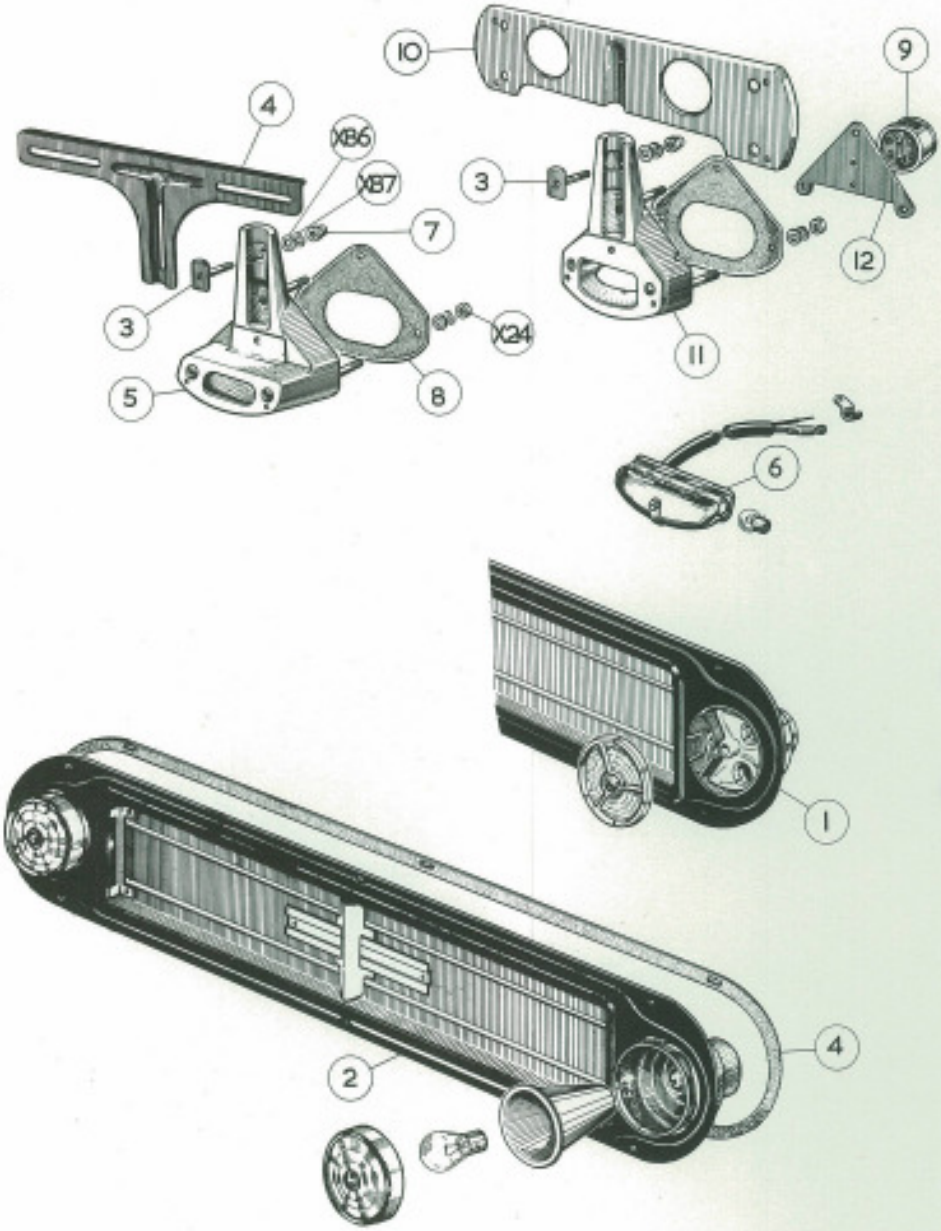

GROUP Q13-13A-13B

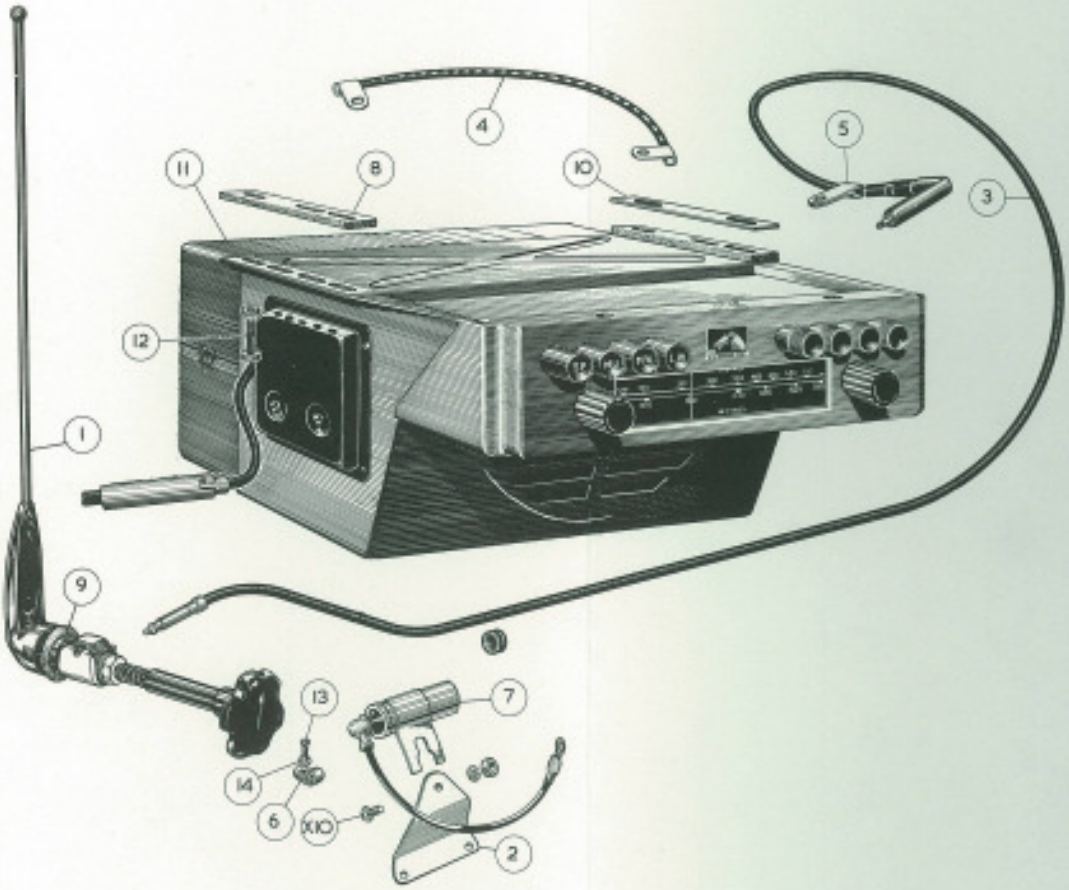

GROUP Q14

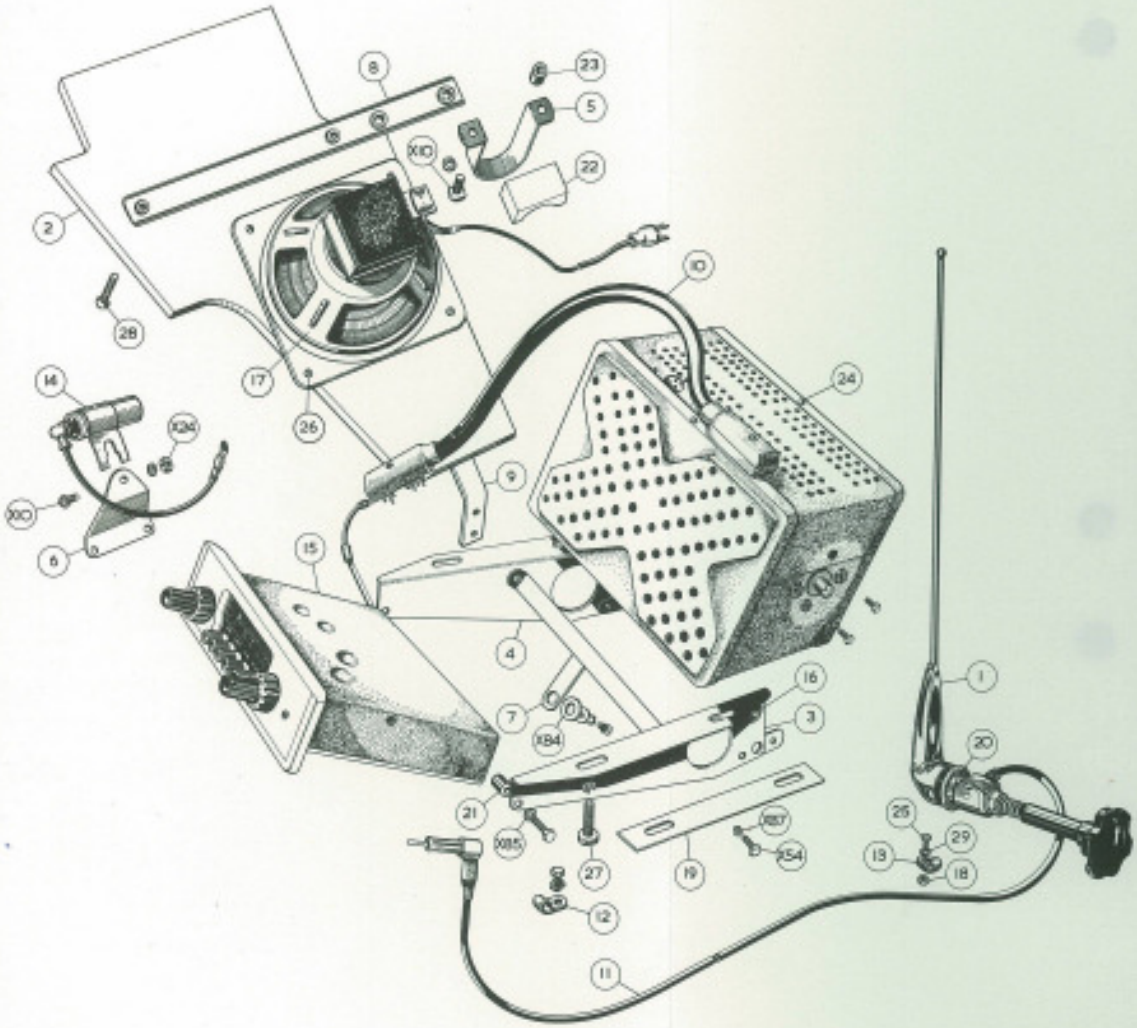
8
23
5
X10
22
2
10
28
14
17
24
X24
26
9
X10
6
15
4
1
16
7
3
X84
20
21
25
29
X85
27
X87
19
X54
13
18
12
11

GROUP Q 14A

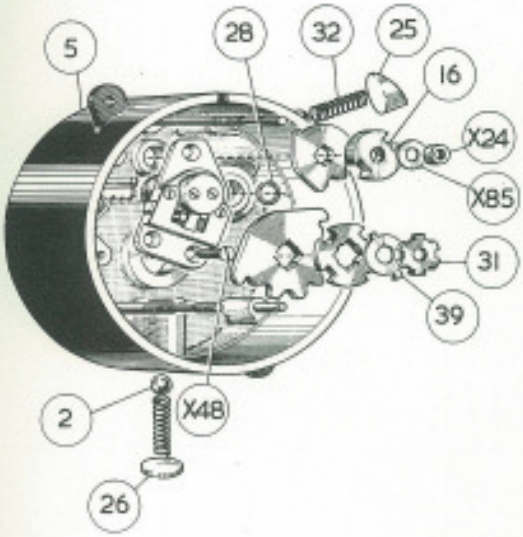
5
28
32
25
16
X24
X85
31
39
2
X48
26

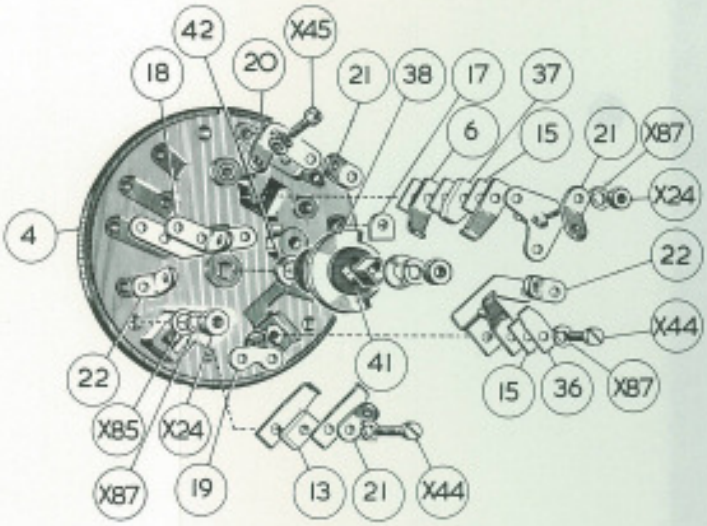
42
X45
18
20
21
38
17
37
6
15
21
X87
X24
4
22
X44
41
15
36
X87
22
X85
X24
X87
19
13
21
X44

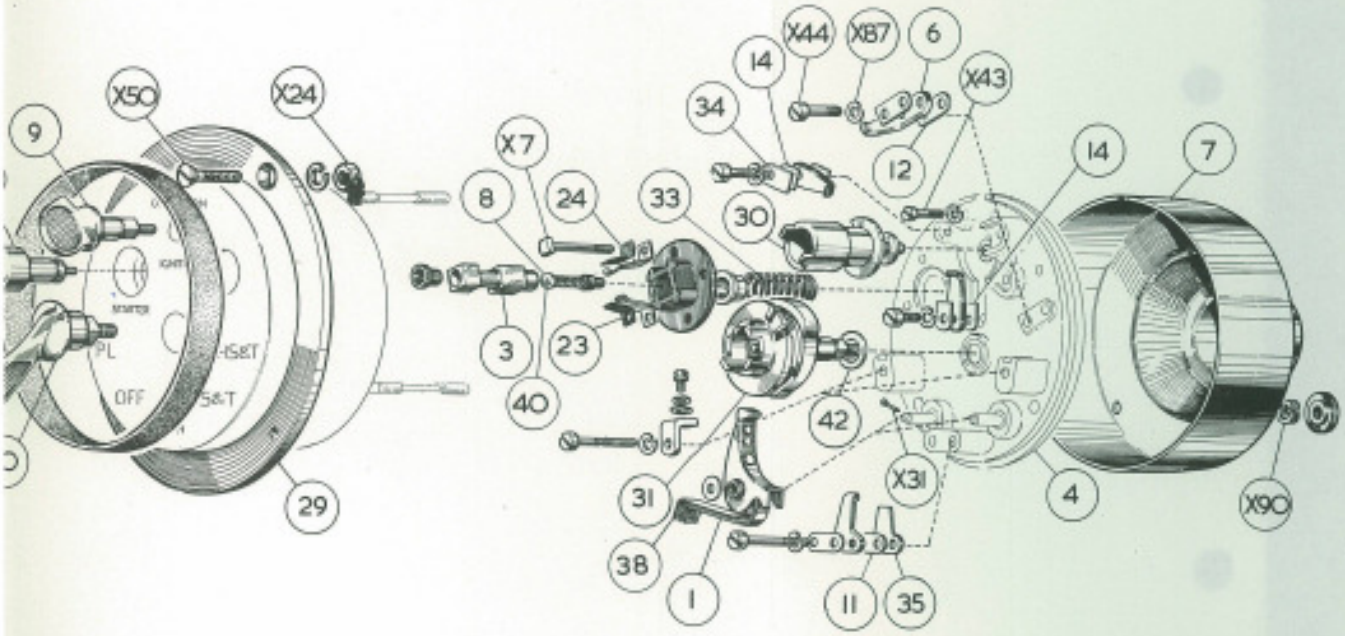
X44
X87
6
14
X43
X50
X24
34
9
X7
12
14
7
8
24
33
30
3
23
40
42
31
X31
4
X90
29
38
1
11
35
OFF
PL
S&T

GROUP Q15

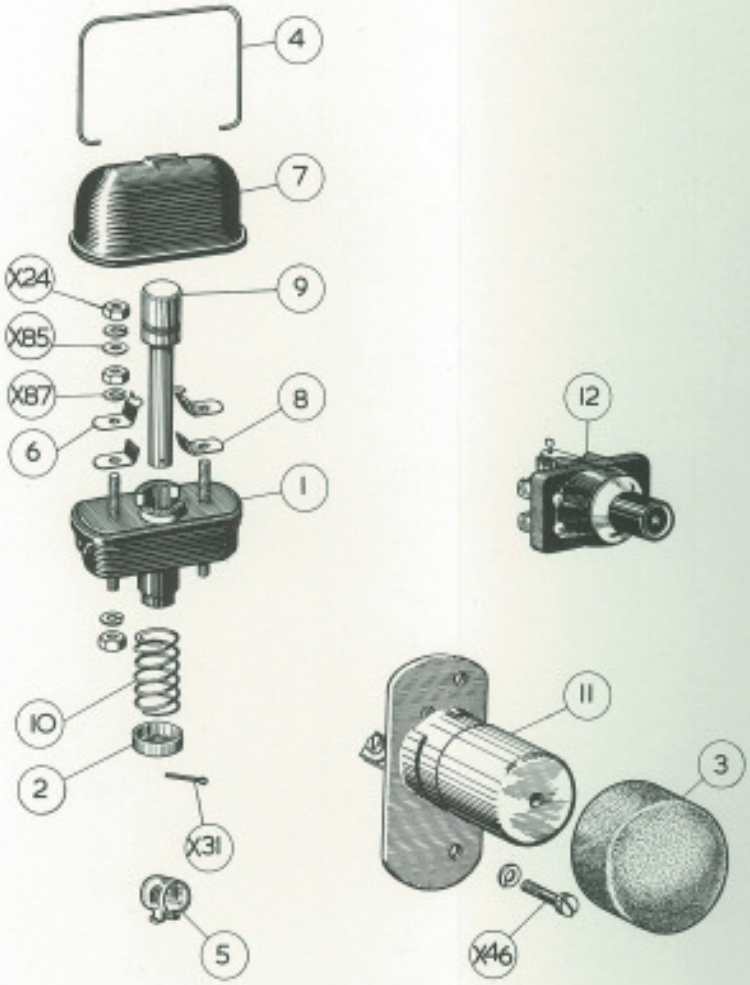

GROUP Q16

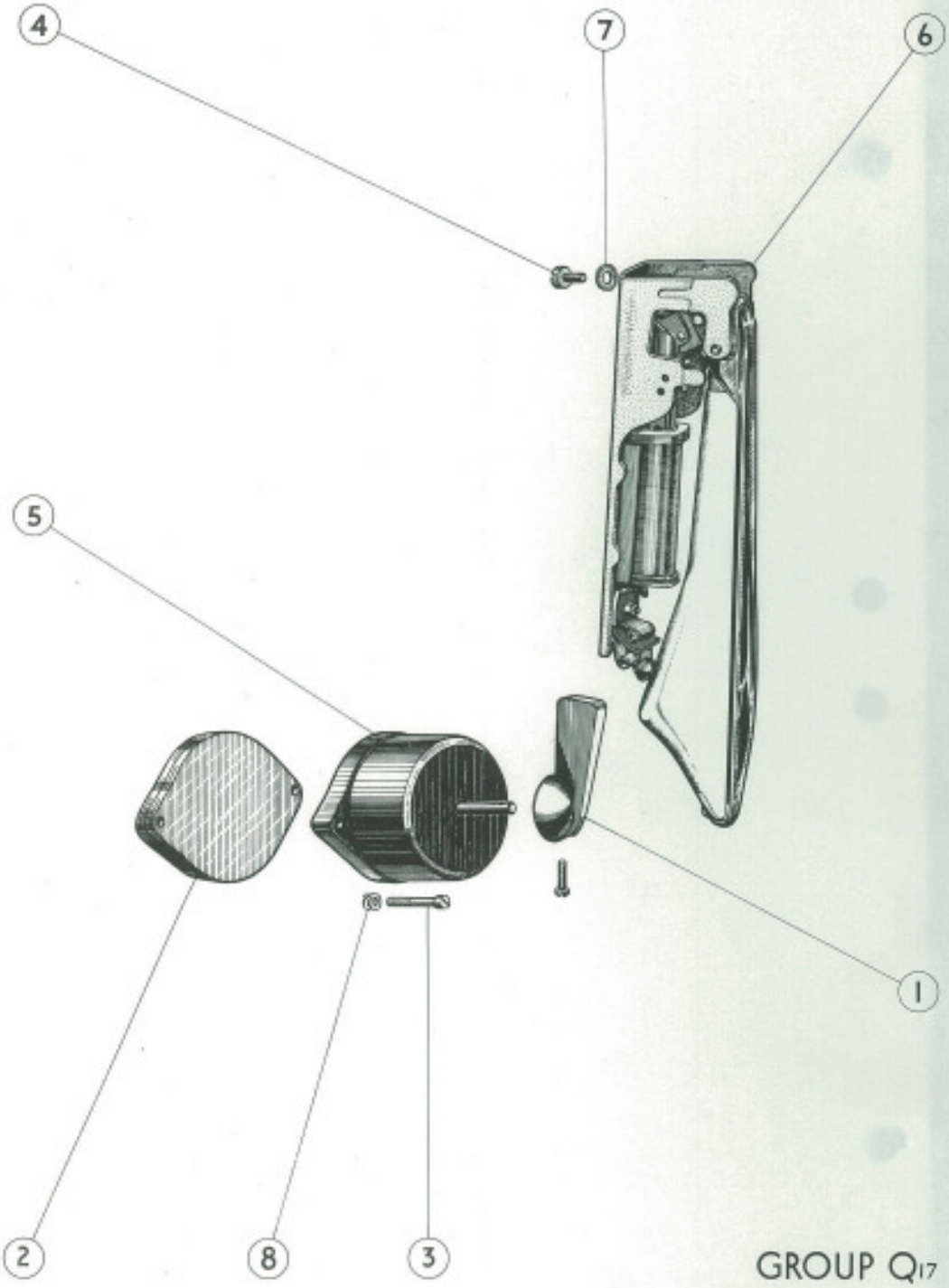

GROUP Q17

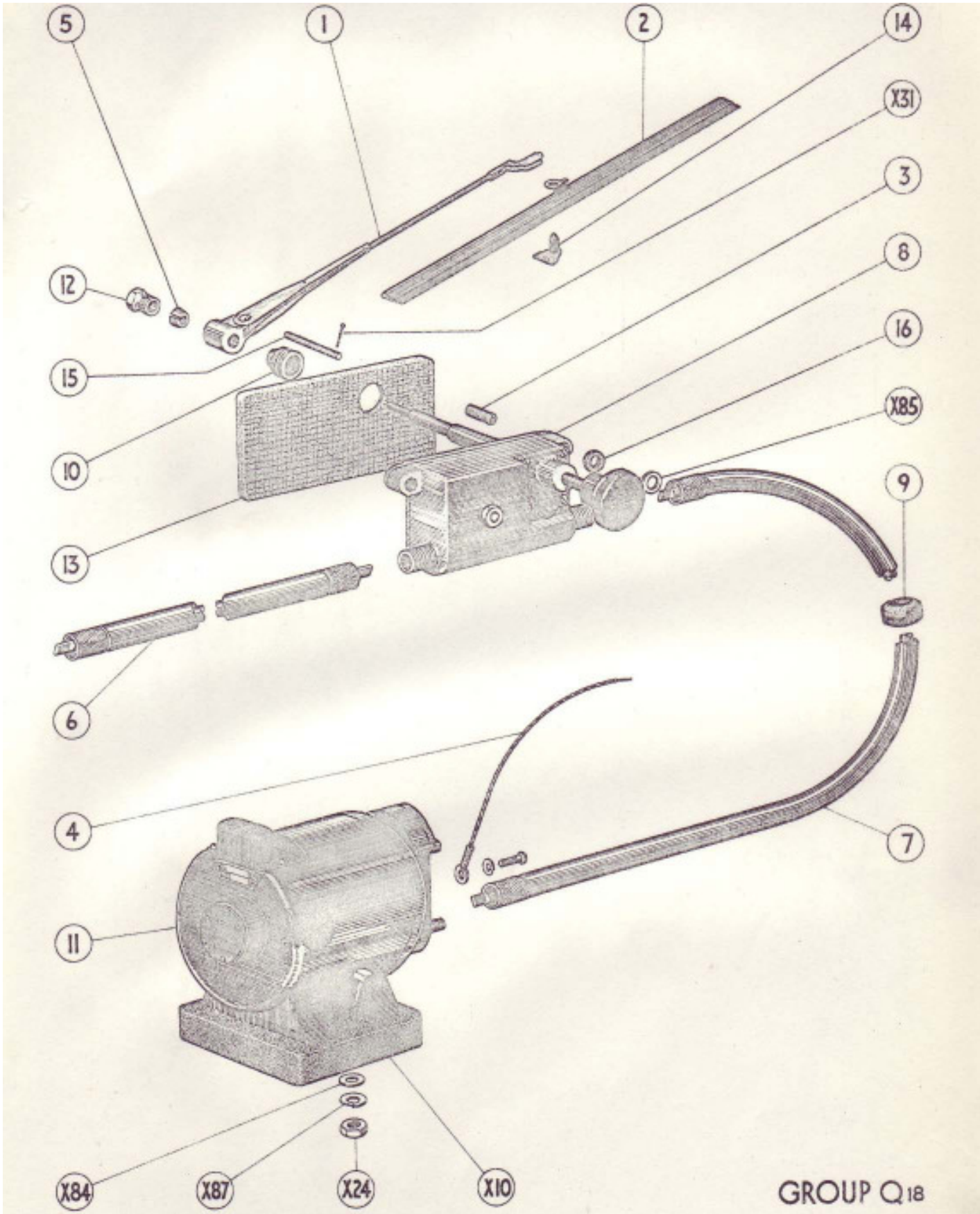

GROUP Q18

PRINTED IN ENGLAND

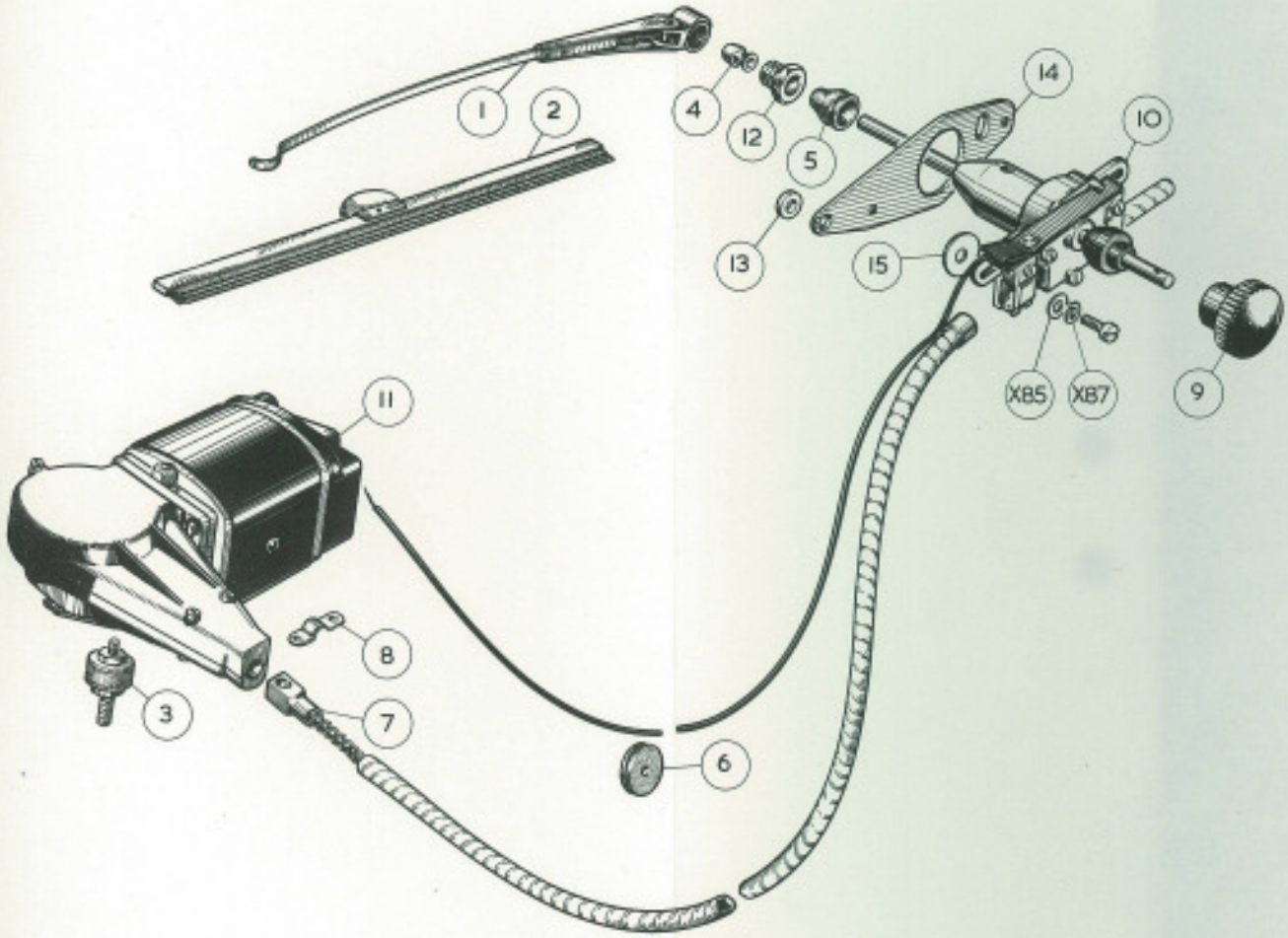

GROUP Q18A

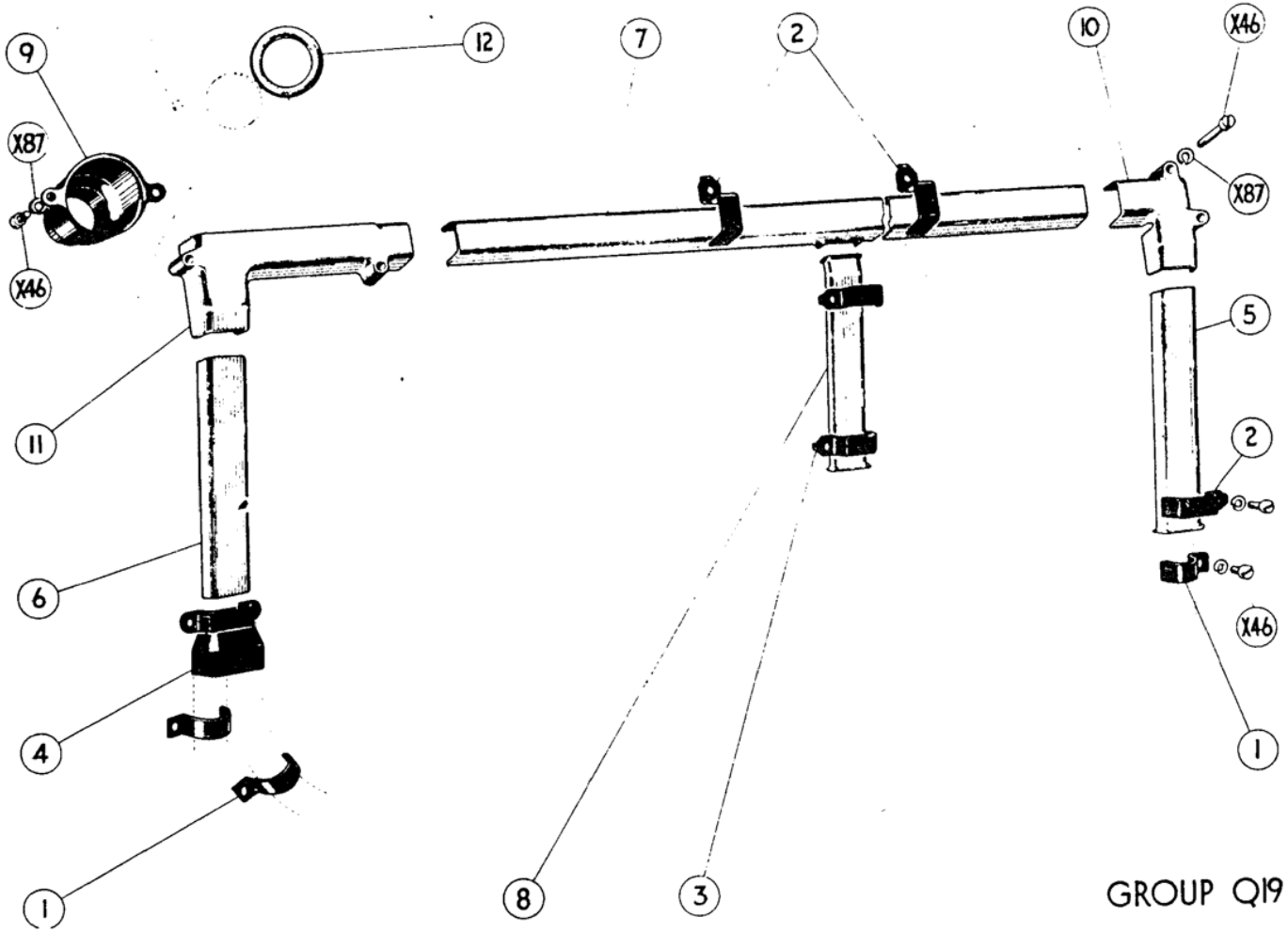

GROUP Q19

PRINTED IN ENGLAND