SILVER DAWN

SECTION H

PROPELLER SHAFT AND UNIVERSAL JOINTS

Containing:-

GROUP 1 PROPELLER SHAFT, FRONT

2 PROPELLER SHAFT, REAR

3 SUPPORT, CENTRE BEARING

KEY TO CHASSIS NUMBERS

Used on	LSBA	2 - 138		
" "	LSCA	1 - 49	=	F
" "	LSCA	51 onwards	=	G

	REF. NO.	PART NO.	QUANTITY GROUP	QUANTITY ASS'LY	NOTES
GROUP H1. PROPELLER SHAFT, FRONT					
Comprising					
BEARING, assembly, consisting of	1	RG 3473	1		
Bearing, Ball, Hoffman or		RG 4454		1	A
Bearing, Ball, Ransome and Marles or		RG 6589			A
Bearing, Ball, Fischer		RG 7084			A
Housing		GB 5305		1	
Baffle		GB 5306		1	
BOLT, .437" dia., flanges	X. 2A	KB 8858/Z	8		
FLANGE, coupling, front to rear	2	GB 4386	1		
KEY, Woodruff, coupling flange, .1875" wide	X.18	KC 515/Z	2		B
KEY, Woodruff, coupling flange, .1880" wide		KC 516/Z			
KEY, Woodruff, coupling flange, .1885" wide		KC 517/Z			
KEY, Woodruff, coupling flange, .1890" wide		KC 518/Z			
NUT, centre bearing	3	GB 3159	1		
NUT, coupling, flange retaining	X.24	K 4340/Z	1		
NUT, half, .437" dia., flange	X.24	K 4319/Z	8		
RETAINER, grease, front	4	GB 5308	1		
RETAINER, grease, rear	5	GB 5307	1		
SHAFT, propeller assembly, including	6	RG 3113	1		
Journal assembly		RG 6388		1	
Ring, snap, (included in assembly)		K 3/7/GN.19		4	
WASHER, Grover, .437" dia., flanges	X.81	K 4511/Z	8		
WASHER, locking, centre bearing nut	7	RG 3189	1		
WASHER, locking, coupling flange retaining nut	X.89	KB 2964	1		
GROUP H2. PROPELLER SHAFT, REAR					
Comprising					
BOLT, .437" dia., rear flange	X. 2A	KB 8858/Z	4		
NUT, half, .437" dia., rear flange	X.24	K 4319/Z	4		
SHAFT, propeller, assembly, including	1	GB 4444	1		F
Journal assembly		RG 6389		2	
Nipple, Tecalemit, TZ/6		RG 6941		2	
Ring, snap (included in assembly)		K 3/7/GB.19		8	
SHAFT, propeller assembly, as above except		RG 6992	1		G
Nipple, Hardy Spicer (Changed thread on shaft)		RG 6940		1	
WASHER, Grover, .437" dia., rear flange		K 4511/Z	4		
GROUP H3. SUPPORT CENTRE BEARING					
Comprising					
BOLT, 2 BA, bearing strap retaining	X. 9	K 128/Z	1		

GROUP H3. (Continued overleaf)

GROUP H3. SUPPORT CENTRE BEARING (Continued)

	REF. NO.	PART NO.	QUANTITY GROUP	QUANTITY ASS'LY	NOTES
BOLT, .250" dia., bracket to frame retaining	X.10	K 206/Z	3		
BOLT, .500" dia., bearing mounting retaining	1A	RG 5991	2		
BRACKET, bearing support, assembly, consisting of	1	RG 3472	1		
Bearing, silentbloc		RG 3076		1	
Bracket		RG 3462		1	
Plate, locating		RG 3463		1	
Rivet		KB 1977		2	
CRADLE, bearing assembly, consisting of	2	RG 3471	1		
Bearing, silentbloc		RG 3076		1	
Cradle		RG 3469		1	
DISC, friction, Ferodo	3	RG 3466	4		
LINK, connecting, L.H.	4	RG 3468	1		
LINK, connecting, R.H.		RG 3467	1		
NUT, half, 2 BA, bearing strap retaining bolt	X.24	K 4307/Z	1		
NUT, half, .250" dia., bracket to frame retaining bolt	X.24	K 4310/Z	3		
NUT, castellated, .500" dia., bearing mounting retaining bolt	X.20	KB 3593/Z	2		
PIN, split, bearing, mounting bolt	X.31	K 4614/Z	2		
SPRING, bearing, mounting	6	RG 3464	1		
STRAP, shaft bearing	7	RG 3470	1		
WASHER, compression, rubber	8	RG 3465	4		
WASHER, plain, .250" dia., bracket to frame bolt	X.85	K 4407/Z	3		
WASHER, plain, .500" dia., bearing mounting	X.85	K 4419/Z	2		
WASHER, spring, 2 BA, bearing strap retaining bolt	X.87	K 9006/Z	1		
WASHER, spring, .250" dia., bracket to frame retaining bolt	X.87	K 9008/Z	3		

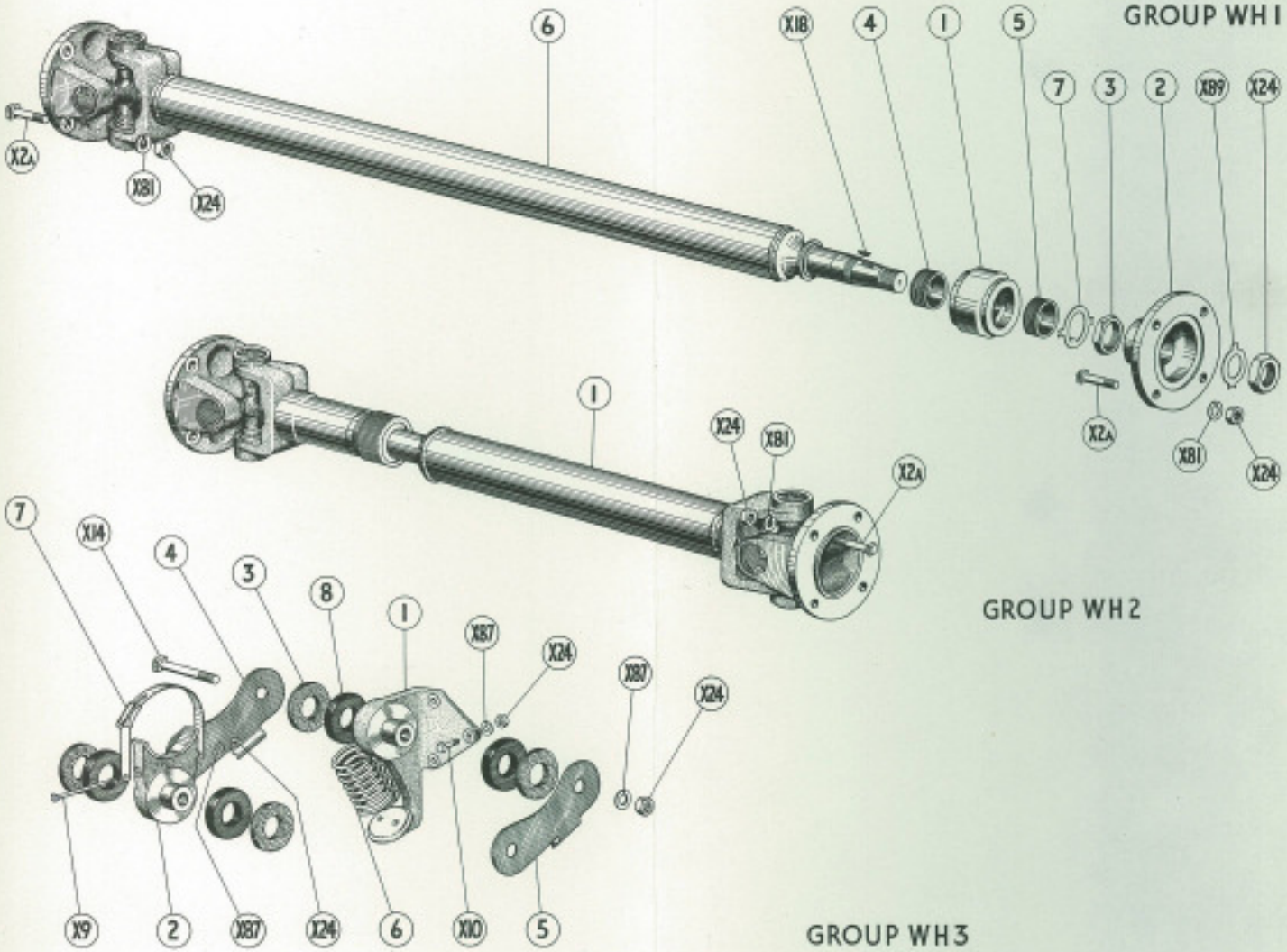
GROUP WH1
6
X18
4
1
5
7
3
2
X89
X24
X2A
X81
X24
X2A
X81
X24
1
X24
X81
X2A
GROUP WH2
7
X14
4
3
8
1
X87
X24
X87
X24
X9
2
X87
X24
6
X10
5
GROUP WH3