SILVER DAWN

SECTION J

B R A K E S

Containing:-

GROUP 1. ADJUSTER, FRONT BRAKE

2. ADJUSTER, REAR BRAKE

3. CARRIER, FRONT BRAKE

4. CARRIER, REAR BRAKE

5. EXPANDER, FRONT BRAKE

6. EXPANDER, REAR BRAKE

7. HAND BRAKE

7A. HAND BRAKE TWIST PULL

8. HYDRAULIC FITTINGS

9. SERVO MOTOR

10. PEDAL FOOT BRAKE

11. RODS AND RELAYS

11A. RODS AND RELAYS (LC)

12. SHOE AND LINKAGE

12A. FRONT SHOE AND LINKAGE

KEY TO CHASSIS NUMERS

Used on	SBA	2-138	= F
" "	SCA	1 onwards	= G
" "		A series	= M

(Continued overleaf)

Used on		SDB	2 onwards	=	N
"	"	SBA	2-36	=	Q
"	"	SBA	38 onwards	=	R
"	"	SBA	2-138	=	S
"	"	SBA	2-138		
"	"	SCA	1-21		
"	"	LSCA	1-23	=	AA
"	"	SCA	27 onwards		
"	"	LSCA	23 onwards	=	BB

GROUP J1. ADJUSTER, FRONT BRAKE (2 off per Chassis)

Comprising

	REF. NO.	PART NO.	QUANTITY GROUP	QUANTITY ASS'LY	NOTES
ADJUSTER, assembly, consisting of	1	GB 3859	1		
Adjuster square end		RG 7002		1	
Housing		RG 7001		1	
Plunger		RG 7004		1	
Plunger		RG 7005		1	
PIECE, distance housing screw	2	GB 3803	2		F
PIECE, distance housing screw		RG 4944	2		G
SCREW, housing	3	GB 3825	2		F
SCREW, housing		RG 5344	2		G
WASHER, spring, .375" dia.		K 9010/Z	2		

GROUP J2. ADJUSTER, REAR BRAKE (2 off per Chassis)

Comprising

ADJUSTER, assembly, consisting of	1	GB 3858	1		
Adjuster, square end		RG 7003		1	
Housing		RG 7001		1	
Plunger		RG 7004		1	
Plunger		RG 7005		1	
GLAND, rubber adjuster stem	2	GB 3124	1		
NUT, lock, .375" dia., hand wheel	X.24	K 4316/Z	1		
SCREW, housing	3	GB 3273	2		
WASHER, plain, .375" dia., screw	X.85	K 4413/Z	2		
WASHER, plain, housing to gland	4	RG 3125	1		
WASHER, spring, .375" dia., screw	X.87	K 9010/Z	2		
WHEEL, hand adjusting	5	GB 3949	1		

GROUP J3. CARRIER, FRONT BRAKE

Comprising

BOLT, .250" dia., bracket to carrier		K 204/Z	8		
BRACKET, steady		GB 3798	4		F
BRACKET, steady		RG 7058	4		G
CATCHER, grease, L.H. with bracket		RG 6042	1		F
CATCHER, grease, R.H. with bracket		RG 6044	1		F
CATCHER, grease		RG 7458	2		G
JOINT, grease catcher		RG 3708	2		F
JOINT, grease catcher		RG 6181	2		G
NUT, half, .250" dia., steady bracket		K 4310/Z	8		
NUT, half, .250" dia., anchor pillar		K 4310/Z	2		F
NUT, half, .312" dia., pivot pin		K 4313/Z	2		F
NUT, half, .437" dia., pivot pin		K 4319/Z	2		F
PILLAR, spring, anchor		RG 3421	2		F
PIN, pivot, fulcrum		RG 4971	2		F

GROUP J3. (Continued overleaf)

GROUP J3. CARRIER, FRONT BRAKE (Continued)

PLATE, carrier, L.H. assembly, consisting of		RG 5515	1	F
Excluder, water		RG 3229	1	
Piece, distance excluder to screen		RG 3200	4	
Plate, carrier		RG 3425	1	
Rivet, .125" dia., excluder to screen		KB 1850	8	
Rivet, .125" dia., excluder to screen for use with distance piece		KB 1862	4	
Rivet, .125" dia., excluder to carrier to make two snap heads		KB 1904	7	
Rivet, .125" dia., excluder to carrier to make countersunk head adjacent to lower spring		KB 1908	1	
Screeen water		GB 4181	1	
PLATE, carrier, L.H. assembly, as above except		RG 6192	1	G
Excluder, water		RG 7057	1	
Plate, carrier		RG 7056	1	
Rivet, .125" dia., excluder to carrier to make snap heads		KB 1908	7	
PLATE, carrier, R.H. assembly, as for L.H. except		RG 5391	1	F
Screen, water		GB 4180	1	
PLATE, carrier, R.H. assembly, as for L.H. except		RG 6191	1	G
Screen, water		GB 4180	1	
PLUG, rubber, carrier plate		RG 3195	2	F
SEAL, rubber, adjuster unit		GB 4327	2	
STRIP, securing front brake		RG 6482	1	G
WASHER, Grover, .437" dia., pivot pin		K 4511/Z	2	F
WASHER, plain, .437" dia., pivot pin		K 4416/Z	2	F
WASHER, spring, .250" dia., anchor pillar and bracket		K 9008/Z	2	F
WASHER, spring, .312" dia., pivot pin		K 9009/Z	2	F

GROUP J4. CARRIER, REAR BRAKE

Comprising

BOLT, long steady bracket to carrier	1	RG 3173	8	
COVER, water excluder	2	RG 3161	2	F
COVER, water excluder		RG 6019	2	G
GUIDE, brake shoe	3	RG 3375	4	
NUT, full, .312" dia., carrier bolt and shoe guide	X.21	K 4009/Z	8	
NUT, half, .250" dia., anchor pillar retaining	X.24	K 4310/Z	2	
NUT, half, .312" dia., carrier bolt and steady bracket	X.24	K 4313/Z	12	
NUT, half, .437" dia., pivot pin	X.24	K 4319/Z	2	
PIECE, distance, steady bracket bolt	4	RG 3174	8	
PILLAR, spring anchor	5	RG 3421	2	
PIN, pivot fulcrum	6	RG 3164	2	

GROUP J4. (Continued overleaf)

GROUP J.4. CARRIER, REAR BRAKE (Continued)

	REF. NO.	PART NO.	QUANTITY GROUP	QUANTITY ASS'LY	NOTES
PLATE, carrier	7	RG.3424	2		
SCREW, short steady bracket to carrier	X.56	KC.277/Z	4		
WASHER, Grover, .437" dia., pivot pin	X.81	K.4511/Z	2		
WASHER, plain, .437" dia., pivot pin	X.85	K.4416/Z	2		
WASHER, spring, .250" dia., anchor pillar	X.87	K.9008/Z	2		F
WASHER, spring, .312" dia., steady bracket and carrier bolts	X.87	K.9009/Z	12		

GROUP J.5. EXPANDER, FRONT BRAKE (2 off)

Comprising

CYLINDER, brake, L.H. assembly, consisting of		RG.7060	1		G
Cylinder, L.H.		RG.6194		1	
Cup		RG.5254		2	
Cover, dust		RG.6183		2	
Piston		RG.6206		2	
Peg, locating		RG.6962		1	
Screw, bleeder		RG.5253		1	
Spring, retainer		RG.5255		2	
Spring		RG.5256		1	
Stud		KB.3830/Z		3	
CYLINDER, brake, R.H. assembly		RG.7059	1		G
Cylinder, R.H.		RG.6193		1	
HOUSING, plunger assembly, consisting of		RG.3193	1		F
Expander		RG.4288		1	
Gland, expander		RG.3391		1	
Housing		RG.3201		1	
Nut, cap, with spring guide		RG.3385		1	
Ring, plunger retainer		RG.3382		2	
Cover, end spring		RG.3393		1	
Plunger, housing expander		RG.4289		2	
Roller, expander		RG.3384		2	
Screw, grub, Allen type				1	
Spring, large dia.		RG.3394		1	
Spring, small dia.		RG.3392		1	
Stud, .250" dia., housing retaining		KB.755		2	
LINK, operating		RG.6184	2		G
LINK, pivot		RG.6961	1		G
NUT, half, .250" dia., housing retaining		K.4310/Z	2		F
NUT, .312" dia., cylinder studs		K.4313/Z	3		G
PIECE, distance, inner housing stud		GB.3826	2		F
PIECE, distance, outer housing stud		GB.3802	2		F
PIN, locating link operating jaw		RG.6106	1		G
PIN, .312" dia., operating link		KB.4557/Z	1		G
PIN, split, .125" dia., operating link pins		K.4613/Z	2		G
SEAL, rubber		GB.4730	1		F
SEAL, rubber		RG.4310	1		G

GROUP J.5. (Continued overleaf)

GROUP J5. EXPANDER, FRONT BRAKE (Continued)

	REF. NO.	PART NO.	QUANTITY GROUP	QUANTITY ASS'LY	NOTES
STIFFENER, for rubber seal		RG 3228	1		F
WASHER, plain, .250" dia., housing stud		FW 337	2		F
WASHER, spring, .250" dia., housing stud		K 7008/Z	2		F
WASHER, spring, .312" dia., cylinder studs		K 9009/Z	3		G
WASHER, Thackeray, .437" dia., housing stud		K 3807/Z	2		F

GROUP J6. EXPANDER, REAR BRAKE (2 off per Chassis)

Comprising

EXPANDER, L.H. assembly, consisting of	1	RG 5400	1		M
Cover, expander				1	
Excluder, dust		RG 3379		1	
Expander		RG 5009		1	
Housing		RG 5010		1	
Nut, securing spring		RG 5012		1	
Pin, bearing, pull rod		RG 3383		1	
Pin, plunger retaining		RG 3382		2	
Plunger		RG 4395		2	
Rod, operating		RG 5520		1	
Roller		RG 3384		2	
Screw, .312" dia., housing				2	
Spring		RG 5011		1	
EXPANDER, R.H. assembly, as above except		RG 5399	1		M
Rod, operating		RG 5519		1	
EXPANDER, L.H. assembly, as RG 5400, except		RG 6366	1		N
Expander		RG 6362		1	
Rod		RG 5667		1	
EXPANDER, R.H. assembly, as above except		RG 6367	1		N
Rod		RG 5666		1	
GLAND, rubber	2	RG 3199	1		
NUT, castellated, .312" dia., housing screw	X.20	KB 3639/Z	4		
PIN, pull rod jaw	3	RG 4409	2		
PIN, split, .062" dia., housing screw	X.31	K 4602/Z	4		
PIN, split, .125" dia., pull rod pin	X.31	K 4643/Z	2		
WASHER, plain, .312" dia., housing screw	X.85	K 4410/Z	4		
WASHER, Thackeray, .312" dia., housing screw	X.90	K 3805/Z	4		

GROUP J7. HAND BRAKE STRAIGHT PULL TYPE (RC ONLY)

Comprising

BOLT, .250" dia., centre bracket	X.10	K 212/Z			B
BOLT, .250" dia., centre bracket	X.10	K 210/Z			B
BOLT, .250" dia., centre bracket	X.10	K 214/Z			B

GROUP J7. (Continued overleaf)

GROUP J7. HAND BRAKE STRAIGHT PULL TYPE (RC ONLY) (Continued)

	REF. NO.	PART NO.	QUANTITY GROUP	QUANTITY ASS'LY	NOTES
BOLT, .250" dia., cable clip to frame retaining	X.10	K 241/Z	1		
CABLE, assembly, consisting of	2	K 3716	1		
Adjuster		GB 37397		1	●
Cable, inner cable ends		GB 34866		2	●
Jaw		GB 19120		1	●
Nut, adjuster		30.B.S.2		2	●
Pin, bearing		75.B.S.20		1	●
Pin, split, jaw		50.B.S.13		1	●
Sheath, outer (57 in. long x .320" dia.)				1	●
Washer, adjuster		45.B.S.2		2	●
Washer, jaw		45.B.S.11		1	●
CLIP, outer cable to frame	3	RG 3266	1		
HAND BRAKE, assembly, consisting of	4	RG 3346	1		
Clip, cable		GB 20378		1	●
Handle		RG 3343		1	●
Nut, push rod		GB 21766		1	●
Pad, spring anti rattle		GB 34871		1	
Pawl		RG 7111		1	●
Piece					
Piece distance, inner centre bracket		GB 34874		1	●
Piece, distance, inner cable clip		GB 34870		1	●
Pin, pawl pivot		RG 7113		1	
Pin, trigger pivot	8	RG 3340			
Release, pawl		GB 21845		1	●
Rod, push, trigger		GB 39874		1	●
Screw, outer stop		210.B.S.2		1	●
Sleeve, outer		GB 34867		1	●
Spring, fork, pawl actuating		RG 7110		1	
Spring, coil, pawl release		RG 7114		1	
Spring, coil, trigger return		GB 18983		1	●
Stop, outer		RG 7112		1	
Trigger		RG 3344		1	
Washer, spring, outer stop		40.B.S.49		1	●
LEVER, assembly, consisting of		RG 3476	1		
Lever		RG 3475		1	
Rivet		KB 1966		2	
Stay		RG 3451		1	
LINK, pull off spring	6	RG 3446	1		
NUT, half, .250" dia., cable clip	X.24	K 4310/Z	1		
NUT, half, .250" dia., retaining clip	X.24	K 4310/Z	2		
PIECE, distance outer, retaining bolt	7	RG 3486			B
PIN, swivel	9	RG 4410	1		
PLATE, cover, dashboard	10	RG 5400	1		
SEAL, rubber dashboard	11	RG 3485	1		
SPRING, pull off	12	RG 3477	1		
WASHER, spring, .250" dia., cable clip	X.87	K 9008/Z	1		
WASHER, spring, .250" dia., retaining bolt	X.87	K 9008/Z	2		

NOTE:- ● Indicates Girling piece number.

GROUP J7A. HAND BRAKE TWIST PULL TYPE (LC ONLY)

Comprising

	REF. NO.	PART NO.	QUANTITY GROUP	QUANTITY ASS'LY	NOTES
CABLE, assembly	1	RG 6012	1		
CLIP, rod to reverse lever	2	RG 6103	1		
COVER		RG 5997	1		Q
COVER	3	RE 10662	1		R
HANDLE, assembly with rod	4	RG 6098	1		
LEVER, 1st relay assembly	5	RG 6007	1		
LEVER, reversing, assembly with 1 off bush RG 5015 (.3175" dia. on later models)	6	RG 5016	1		
LEVER, reversing, assembly with 1 off bush RG 7091 (.4062" dia.)		RG 7135	1		
LINK, 1st, relay lever spring	7	RG 6025	1		
NUT, 2 BA, cover to stay arm cover	X.24	K 4307/Z	3		
NUT, pivot, reversing lever (where RG 7091 bush is used)		K 4313/Z	1		
NUT, .250" dia., clamps and dashboard	X.24	K 4310/Z	8		
PAWL	8	RG 5723	2		
PIECE, distance, pawl spring	9	RG 5303	1		
PIN, 1st relay, lever	10	RG 4410	1		
PIN, fulcrum, (when RG 5015 bush is used)	11	RG 4406	1		
PIN, fulcrum, (when RG 7091 bush is used)		K 310/Z	1		
PIN, pawl	12	RG 5325	1		
PIN, rod clip	13	RG 6124	1		
PIN, rod to reversing lever	14	RG 5327	1		
PIN, split, rod and fulcrum jaws (when RG 5015 bush is used)	X.31	K 4643/Z	5		
PIN, split, rod and fulcrum jaws (when RE 7091 bush is used)	X.31	K 4643/Z	4		
PLATE, cover	15	RG 5326	1		
RING, rubber	16	RG 5328	1		
RIVET, spring stop	17	RG 6102	1		
SCREW, pawl spring		KC 106/Z	1		
SCREW, stay to dashboard	X.55	KC 903/Z	1		
SEATING, spherical assembly, consisting of	18	RG 6023	1		
Seating		RG 5996		1	
Stud, .250" dia., clamp		KB 356/Z		4	
Stud, .250" dia., dashboard		KB 399/Z		4	
SLEEVE	19	RG 5323	1		
SPRING, pawl	20	RG 6208	1		
SPRING, return	21	RG 6101	1		
SPRING, 1st relay lever	22	GB 5097	1		
STAY	23	RG 5998	1		
STAY	24	RG 5999	1		
TUBE, assembly, consisting of	25	RG 6003	1		Q
Cover, end		RG 5321		1	
Cover, twist pull hand brake		RG 5997		1	
Nut, 3 BA, end cover		K 4304/Z		4	
Ring, clamping		RG 6000		1	
Rivet		KB 2565		3	
Stud, 2 BA, end cover to stay		KB 299/Z		1	
Stud, 3 BA, end cover to stay		KB 249/Z		4	
Tube, cover		RG 6002		1	
Washer, F.S. 3 BA, end cover		K 9005/Z		4	

GROUP J7A. (Continued overleaf)

GROUP J7A. HAND BRAKE TWIST PULL TYPE (LC ONLY) (Continued)

	REF. NO.	PART NO.	QUANTITY GROUP	QUANTITY ASS'LY	NOTES
TUBE, assembly, consisting of		RE 10660	1		R
Cover end		RE 10661		1	
Cover tube		RG 6002		1	
Ring, clamping		RG 6000		1	
Rivet, .1875" dia.		KB 2565		3	
Stud, end cover to stay		KB 299/Z		1	
Stud, 2 BA, cover to end cover		KB 252/Z		2	
Washer, FS, end cover to cover		K 9006/Z		2	
WASHER, plain, fulcrum pin	X.85	K 4110/N	1		
WASHER, plain, pin clip	X.85	K 4001/Z	1		
WASHER, plain, dashboard	X.85	K 4407/Z	1		
WASHER, spring, 2 BA	X.87	K 9006/Z	2		
WASHER, spring, .312" dia.	X.87	K 9008/Z	9		
WASHER, spring, .312" dia. reversing lever fulcrum (when bush RG 7091 is used).		K 9009/Z	1		

GROUP J8. HYDRAULIC FITTINGS

Comprising

	REF. NO.	PART NO.	QUANTITY GROUP	QUANTITY ASS'LY	NOTES
BOLT, 2 BA, steady bracket upper (where fitted)	X. 9	K 103/Z	1		
BOLT, 2 BA, steady bracket lower (where fitted)	X. 9	K 130/Z	1		
BOLT, .250" dia., pipe clips (5 or 6) bracket (5)	X.70	K 203/Z	11		
BOLT, .250" dia., link anchorage	X.10	K 216/Z	1		
BOLT, .312" dia., cylinder retaining and upper fulcrum	X.11	K 324/Z	5		
BRACKET, cylinder to frame, inner, assembly, consisting of	1	RG 3633A	1		
Bracket		RG 3633		1	
Rivet		KB 1962		2	
Stay		GB 5003		1	
BRACKET, cylinder to frame (LC)		RG 5720	1		
BRACKET, cylinder to frame outer (RC)	2	RG 4202	1		
BRACKET, hose, inner	3	RG 3294	2		
BRACKET, hose, outer	4	RG 3293	2		
BRACKET, tee piece, steel pipe	5	RG 3267	1		
BRACKET, steady brake rod servo to inter lever (where fitted)	6	RG 4203	1		
BUSH, link bolt	7	RG 3237	1		
BUSH, long upper fulcrum	8	GB 5093	1		
BUSH, steady bracket (where fitted)	9	RG 4204	2		
CLIP, pipe to frame (.250" dia.)	10	RG 3292	5		
CONNECTION, outlet, master cylinder	11	RG 7102	1		
CYLINDER, master assembly, including	12	RG 5782	1		
Jaw		RG 3144		1	
Nut		GB 5096		1	
GASKET, copper outlet connection and brake expander	13	RG 5779	3		
HOSE, assembly with connection	14	RG 6988	2		

GROUP J8. (Continued overleaf)

GROUP J8. HYDRAULIC FITTINGS (Continued)

	REF. NO.	PART NO.	QUANTITY GROUP	QUANTITY ASS'LY	NOTES
LEVER, balance assembly, consisting of	15	RG 3277	1		S
Bolt, inner lever retaining		RF 4418		1	
Bush, lower bolted		RG 3235		1	
Bush, upper rivetted		RG 3236		1	
Lever, inner 3.00 centre		RG 6035		1	
Lever, outer		RG 3233		2	
Nut, half, .375" dia.		K 4316/Z		1	
LEVER, balance, assembly, as above, except		RG 6486	1		G
Lever, inner, 2.8 centre		RG 6034		1	
LINK, pull off spring	16	RG 3145	2		
NUT, half, steady bracket (where fitted)	X.24	K 4307/Z	2		
NUT, half, .250" dia., bracket to frame bolt (5), lower fulcrum (1) (pipe clips 5 or 6)	X.24	K 4310/Z	12		
NUT, half, .312" dia., cylinder and upper fulcrum bolts	X.24	K 4313/Z	5		
NUT, hose connection retaining	17	RG 7103	2		
PIECE, distance, link bolt	18	RG 3234	2		
PIECE, distance, upper fulcrum	19	GB 5095	2		
PIECE, tee, steel pipes	20	RE 5781	1		
PIN, plain, front cylinder jaw	21	RG 4408	1		
PIN, plain, rear cylinder jaw	22	RG 3143	1		
PIN, split, .062" dia., jaw rear pin	X.31	K 4603/Z	2		
PIN, split, .125" dia., jaw front pin	X.31	K 4643/Z	1		
PIPE, master cylinder to tee piece assembly with gland nuts	23	RG 7013A	1		
PIPE, tee piece to L.H. bracket assembly with gland nuts	24	RG 3297A	1		
PIPE, tee piece to R.H. bracket assembly with gland nuts	25	RG 3296A	1		
SCREW, tee piece bracket	X.56	KC 321/Z	1		
SPRING, pull off	26	GB 5097	1		
WASHER, spring, hose connection	27	K 19411	2		●
WASHER, plain, 2 BA, steady bracket (where fitted)	X.85	K 4404/Z	2		
WASHER, spring, 2 BA, steady bracket (where fitted)	X.87	K 9006/Z	2		
WASHER, spring, .250" dia., bracket to frame (5) link (1) pipe clips (5 or 6)	X.87	K 9008/Z	12		
WASHER, spring, .312" dia., cylinder (5) tee piece bracket (1)	X.87	K 9009/Z	6		

NOTE:- ● Indicates Lockheed Piece Number.

GROUP J9. MOTOR SERVO

Comprising

BALL, .3125" dia., between levers	1	RG 6131	3		A
BALL, .3125" dia., between levers	1	RG 6594	3		A

GROUP J9. (Continued overleaf)

GROUP J9. MOTOR SERVO (Continued)

	REF. NO.	PART NO.	QUANTITY GROUP	QUANTITY ASS'LY	NOTES
BEARING, ball, pressure plate assembly with 24 balls, .1875" dia., RG 6209 or RG 6593	2	GB 3898	1		
BEARING, self sealing	3	RG 4450	1		A
BEARING, self sealing		RG 5656	1		A
CAGE, thrust bearing	4	RG 3100	1		
COVER, dust, thrust bearing	5	RG 3939	1		
LEVER, brake actuating	6	GB 5088	2		
LEVER, cam, 30°, inner assembly, consisting of	7	GB 4985A	1		V
Bush		GB 3546		1	
Lever		GB 4985		1	
Sleeve		GB 3545		1	
LEVER, cam, 25°, inner assembly as above except		RG 5369A	1		W
Lever		RG 5369		1	
LEVER, cam, 22½°, inner assembly as above except		RG 4859A	1		X
Lever		RG 4859		1	
LEVER, cam, 35°, inner assembly as above except		RG 5366A	1		⊕
Lever		RG 5366		1	
LEVER, cam, outer 30° cam		GB 4986	1		V
LEVER, cam, outer 22½° cam		RG 4858	1		X
LEVER, cam, outer 35° cam		RG 5367	1		⊕
LEVER, cam, outer 25° cam		RG 5368	1		W
NUT, half, .625" dia., shaft	X.24	K 4328/Z	2		
PLATE, driving assembly, consisting of	9	RG 7151	1		
Plate, backing		RG 4221		1	
Ring, inertia		RG 4767		1	
Rivet, .0937" dia.		KB 13125		9	
Washer, adjusting, .003 thick		RG 7148			B
Washer, adjusting, .005 thick		RG 7149			B
Washer, Belville		RG 4220		1	
Plate and linings sub-assembly consisting of		RG 7152		1	
Lining or		RG 3904		1	A
Lining		RG 7372		1	A
Plate, spring		RG 3905		9	
Rivet, plate to lining		RG 3916		9	
Rivet, .0937" dia., countersunk		KB 13123		18	
PLATE, pressure assembly, consisting of	10	RG 5708A	1		
Pin, operating		RG 3480		2	
Plate		RG 5708		1	
PLATE, spring assembly, consisting of	11	RG 3316	1		
Baffle		RG 3314		1	
Drain		RG 3313		1	
Plate		RG 3458		1	
Rivet, .062" dia., flat head		KB 2352		3	

GROUP J9. (Continued overleaf)

GROUP J9. MOTOR SERVO (Continued)

PLATE, thrust	12	GB 3501	1	
PROTECTOR, spring plate to pressure plate joint	13	RG 3311	1	
RACE, outer, pressure plate bearing	14	GB 4061	1	
SCREW, long, shaft retaining	15	GB 5117	1	
SHAFT, main	16	RG 3317	1	
SPRING, protector retaining	17	RG 3312	1	
WASHER, actuating levers	18	GB 5083	1	
WASHER, felt, pressure plate bore	19	D 54399	1	
WASHER, oil retaining, pressure plate bore	20	GB 4171	1	
WASHER, plain, .625" dia., shaft	X.85	K 4425/Z	1	
WASHER, securing, spring plate	21	GB 5150	1	

NOTE:- * These pieces are fitted only at the discretion of the service station.

GROUP J10. PEDAL FOOT BRAKE

Comprising

BOLT, .312" dia., pedal holder to pedal lever	X.11	K 309/Z	1	
BUSH, floating, pedal lever (RC)	1	FB 3396	2	
For BUSH on (LC) see Group F4.				
COLLAR, pedal retaining spring anchor (RC)		KB 1179/Z	1	
CUP, anti-fume seal	2	RF 8328	1	
HOLDER, pedal upward stop (where fitted) (RC)		FB 4425	1	
LEVER, pedal assembly with (RC)	3	RF 6690	1	
Lever, operating		RF 6688		1
Lever, pedal		RF 6687		1
Pin, return spring anchor		FB 3751		1
LEVER, pedal (LC)	4	RF 6330	1	
LINK, pedal lever spring	5	RF 6336	1	
NUT, full, .312" dia., pedal holder to pedal lever	X.21	K 4009/Z	1	
NUT, half, 3 BA, anti-fume seal retaining bolt	X.24	K 4304/Z	2	
NUT, half, .500" dia., pedal shaft retaining (RC)	X.24	K 4322/Z	2	
For .500" dia. NUT, shaft retaining (LC) see Group F4.				
NUT, lock, 2 BA, spherical headed screw (RC)	X.24	K 4307/Z	1	
PEDAL, assembly, consisting of	6	RF 5199	1	
Holder		RF 5197		1
Pad, rubber		RF 4282		1
Plate		FB 3769		1
PIECE, distance anti-fume seal	7	F 61510	2	
PIN, split, .062" dia., pedal return spring anchor (RC)	X.31	K 4602/Z	1	
RETAINER, anti-fume seal	8	F 61548	1	
SCREW, cheese head, 3 BA	X.45	K 1816/Z	2	
SCREW, 2 BA, spherical headed screw (RC)	9	FB 766	1	
SHAFT, pedal (RC)	10	FB 3759	1	
SHAFT, pedal (LC) see Group F4.				
SPRING, anti-fume seal	11	F 60920	1	
SPRING, pedal return (RC)	12	FB 342	1	
SPRING, pedal return (LC)	13	RG 3447	1	

GROUP J10. (Continued overleaf)

GROUP J10. PEDAL FOOT BRAKE (Continued)

SCHEDULE OF SPARE PARTS	REF. NO.	PART NO.	QUANTITY GROUP	QUANTITY ASS'LY	NOTES
STOP, pedal upward (where fitted) (RC)	14	FB 4457		1	
WASHER, felt, anti-fume seal	15	FB 472		1	
WASHER, plain, felt retaining screw	X.85	K 4446/Z		2	
WASHER, plain, pedal shaft	16	FB 4623		2	
WASHER, rubber, pedal lever (RC)	17	FB 3750		2	
WASHER, rubber, pedal lever (LC)		RF 6408		2	
WASHER, spring, 3 BA, anti-fume seal	X.87	K 9005/Z		2	
WASHER, spring, .312" dia., pedal holder	X.87	K 9009/Z		1	

GROUP J11. RODS AND RELAYS

Comprising

BAR, steady rear equaliser	1	RG 3551		1	
BOLT, bracket and lockplate	X.10	K 241		5	
BRACKET, intermediate shaft	2	RG 3584		1	
BUSH, equaliser lever	3	GW 971		2	
COVER, pivot pin	4	GW 1457		1	
JAW, .312" dia., servo cam lever	X.17	KB 1110/Z		2	
JAW, .312" dia., (RC)	X.17	KB 1112		8	
LEVER, equaliser	5	RG 3184		1	
LEVER, long, intermediate shaft	6	RG 3589		2	
LEVER, short intermediate shaft	7	RG 5359		1	
LINK, bracket to servo	8	GB 5087		1	
NUT, castellated, .312" dia., pivot pin	X.20	KB 3583/Z		1	
NUT, half, .250" dia., intermediate bracket	X.24	K 4310/Z		5	
NUT, half, .312" dia., jaws	X.24	K 4313/Z		5	
NUT, half, .437" dia., pivot pin	X.24	K 4319/Z		1	
PIECE, distance, steering bar	9	RG 3557		1	
PIN, bearing	10	RG 4408		9	
PIN, bearing, with recess link	11	GB 5086		2	
PIN, bearing, servo cam	X.29	K 6604/Z		2	
PIN, pivot, equaliser	12	RG 3558		1	
PIN, split, .062" dia., pivot pin	X.31	K 4602/Z		1	
PIN, split, .125" dia., bearings	X.31	K 4643/Z		11	
PIN, support, splined shaft	13	RG 3586		1	
PLATE, pin locking, intermediate shaft	14	RG 3585		1	
PLATE, pin, retaining servo link	15	GB 5085		2	
ROD, intermediate shaft to balance lever	16	RG 3595		1	
ROD, intermediate shaft to handbrake	17	RG 3596		1	
ROD, intermediate shaft to servo	18	RG 3597		1	
ROD, intermediate shaft to equaliser	19	RG 5523		1	
ROD, servo to pedal	20	GB 3216		1	
SCREW, 2 BA, servo link	X.54	KC 151/Z		2	
SHAFT, splined, intermediate	21	RG 3587		1	
SPRING, intermediate shaft, lever to frame	22	GB 5097		1	
SUPPORT, rubber, equaliser bar		RG 3552		1	AA
SUPPORT, bracket assembly, equaliser bar with	23	RG 5460		1	BB
Shackle assembly		RG 5461		1	
WASHER, felt, lower equaliser	24	GW 447		1	
WASHER, felt, upper equaliser	25	RG 3183		1	
WASHER, Grover, .437" dia., pivot pin	X.81	K 4511/Z		1	
WASHER, plain, equaliser bar	26	RG 3556		2	

GROUP J11. (Continued overleaf)

GROUP J11. RODS AND RELAYS (Continued)

	REF. NO.	PART NO.	QUANTITY GROUP ASS'LY	NOTES
WASHER, plain, pivot pin	X.85	K 4410/Z	1	
WASHER, plain, pivot pin, upper	27	RG 3186	1	
WASHER, spring, 2 BA, servo link	X.87	K 9006/Z	2	
WASHER, spring, .250" dia. intermediate shaft	X.87	K 9008/Z	5	

GROUP J11A. RODS AND RELAYS (LC)

Comprising

BAR, steady, rear equaliser	1	RG 3551	1	
BOLT, bracket and lockplate	X.10	K 241/Z	9	
BRACKET, intermediate shaft	2	RG 3584	1	
BRACKET, 2nd relay lever	3	RG 6005	1	
BUSH, equaliser lever	4	GW 971	2	
COVER, pivot pin	5	GW 1457	1	
JAW, .312" dia., servo cam lever	X.17	KB 1110/Z	2	
JAW, .312" dia., relay lever	X.17	KB 1112/Z	14	
LEVER, equaliser	6	RG 3184	1	
LEVER, long, intermediate shaft	7	RG 3589	2	
LEVER, short intermediate shaft	8	RG 5359	1	
LEVER, bellcrank, L.H.	9	RG 5716	1	
LEVER, bellcrank, R.H.	10	RG 5717	1	
LEVER, 2nd, relay	11	RG 6004	1	
LINK, bracket to servo	12	GB 5087	1	
LINK, pull off spring lever operating long	13	RG 3446	1	
NUT, castellated, .312" dia., pivot pin	X.20	KB 3583/Z	1	
NUT, half, .250" dia., intermediate bracket	X.24	K 4310/Z	5	
NUT, half, .250" dia., relay levers	X.24	K 4310/Z	4	
NUT, half, .312" dia., jaws	X.24	K 4313/Z	8	
NUT, half, .437" dia., pivot pin	X.24	K 4319/Z	1	
PIECE, distance steady bar	14	RG 3557	1	
PIN, 2nd, relay lever, bellcrank lever	X.28	K 6622/Z	2	
PIN, bearing	15	RG 4408	14	
PIN, jaw	16	RG 4405	1	
PIN, bearing with recess, link	17	GB 5086	2	
PIN, bearing, servo cam	X.29	K 6604/Z	2	
PIN, bellcrank lever, RH	18	RG 5715	1	
PIN, pivot, equaliser	19	RG 3558	1	
PIN, split, .062" dia., pivot pin	X.31	K 4602/Z	1	
PIN, split, .125" dia., bearings	X.31	K 4643/Z	17	
PIN, support, splined shaft	20	RG 3586	1	
PLATE, pin, locking, intermediate shaft	21	RG 3585	1	
PLATE, pin, retaining servo link	22	GB 5085	2	
ROD, intermediate shaft to balance lever	25	RG 3595	1	
ROD, 2nd, relay to brake lever	23	RG 6006	1	
ROD, 1st, to 2nd, relays	24	RG 6011	1	
ROD, intermediate shaft to equaliser	26	RG 5523	1	
ROD, push, bellcrank to servo	27	RG 5498	1	
ROD, servo to intermediate levers	28	RG 3597	1	
ROD, tie, bellcrank to pedal	29	RG 5497	1	
ROD, tie, bellcrank	30	RG 5714	1	
SCREW, 2 BA, servo link	X.54	KC 151/Z	2	
SHAFT, splined, intermediate	31	RG 3587	1	

GROUP J11A. (Continued overleaf)

GROUP J11A. RODS AND RELAYS (LC) (Continued)

	REF. NO.	PART NO.	QUANTITY GROUP	QUANTITY ASS'LY	NOTES
SUPPORT, rubber equaliser bar		RG 3552	1		AA
SUPPORT, bracket assembly equaliser bar with	32	RG 5460	1		BB
Shackle assembly		RG 5461		1	
WASHER, adjusting, bellcrank lever, L.H.		K 8807/Z			B
WASHER, felt, lower, equaliser	33	GW 447	1		
WASHER, felt, upper, equaliser	34	RG 3183	1		
WASHER, Grover, .437" dia., pivot pin	X.81	K 4511/Z	1		
WASHER, plain, equaliser bar	35	RG 3556	2		
WASHER, plain, pivot pin	X.85	K 4410/Z	1		
WASHER, plain, pivot pin upper	36	RG 3186	1		
WASHER, spring, 2 BA, servo link	X.87	K 9006/Z	2		
WASHER, spring, .250" dia., intermediate shaft and relay levers	X.87	K 9008/Z	9		

GROUP J12. SHOE AND LINKAGE (2 sets front and 2 sets rear)

NOTE:- Before Chassis No. SCA 1 Front and Rear Brake Shoes were common Commencing Chassis No. SCA 1 Front and Rear Brakes are no longer interchangeable.

JAW, push rod front and rear brakes	1	RG 6045	1		F
LEVER, fulcrum assembly with oilite bush GB 4736-1off.	2	RG 3165	1		F
LINK, trailing shoe to fulcrum	3	RG 3170	1		F
NUT, half, .312" dia., jaw to push rod locking	X.24	K 4010/Z	1		F
PIN, bearing, rod, fulcrum and link	4	RG 6106	4		F
PLATE, locking link	5	RG 3171	1		F
PLATE, locking rod	6	RG 4355	1		F
ROD, push	7	RG 6046	1		F
SCREW, 2 BA, locking plates rod and link	X.54	KC 152/Z	3		F
SHOE, brake assembly, consisting of	8	RG 5353	2		F
Lining		RG 3305		2	
Rivet, countersunk head				12	
Shoe		RG 3160		2	
SPRING, shoe retaining (adjuster side)	9	GB 3808	1		F
SPRING, shoe retaining (expander side)	10	RG 6991	1		F
WASHER, spring, 2 BA, locking plate screw	X.87	K 9006/Z	2		F

GROUP J12A. FRONT SHOE AND LINKAGE (2 sets per Chassis)

Comprising

JAW, brake shoe, push rod	1	RG 3457	1		G
LEVER, pivot, front brake shoes	2	RG 6176	1		G
LINK, pivot, front brake shoes	3	RG 6961	1		G
NUT, setscrew, jaw	X.24	K 4313/Z	1		G
PIN, .250" dia., link	X.28	KB 4531/Z	3		G
PIN, split, .062" dia., link	X.31	K 4602/Z	3		G
PIN, split, .093" dia., off stop pin	X.31	K 4607/Z	2		G
PIN, locating jaw	4	RG 6106	1		G
PIN, off stop, front brake	5	RG 6172	1		G
PLATE, locking jaw	6	RG 4355	1		G
PLATE, anchor spring front brake	7	RG 6177	1		G
ROD, push	8	RG 6174	1		G
SPRING, pull off brake shoes	9	RG 5635	1		G

GROUP J12A. (Continued overleaf)

GROUP J12A. FRONT SHOE AND LINKAGE (Continued)

	REF. NO.	PART NO.	QUANTITY GROUP	QUANTITY ASS'LY	NOTES
SPRING, lever, brake shoes	10	RG 5637	1		G
SPRING, front, brake shoe	11	RG 6175	1		G
SCREW, set, 2 BA, jaws	X.54	KC 152/Z	1		G
SHOE, brake assembly, consisting of	12	RG 6924	2		G
Lining		RG 3305		2	
Rivet		RG 6167		12	
Shoe		RG 6923		2	
WASHER, setscrew jaw		K 9006/Z	1		G

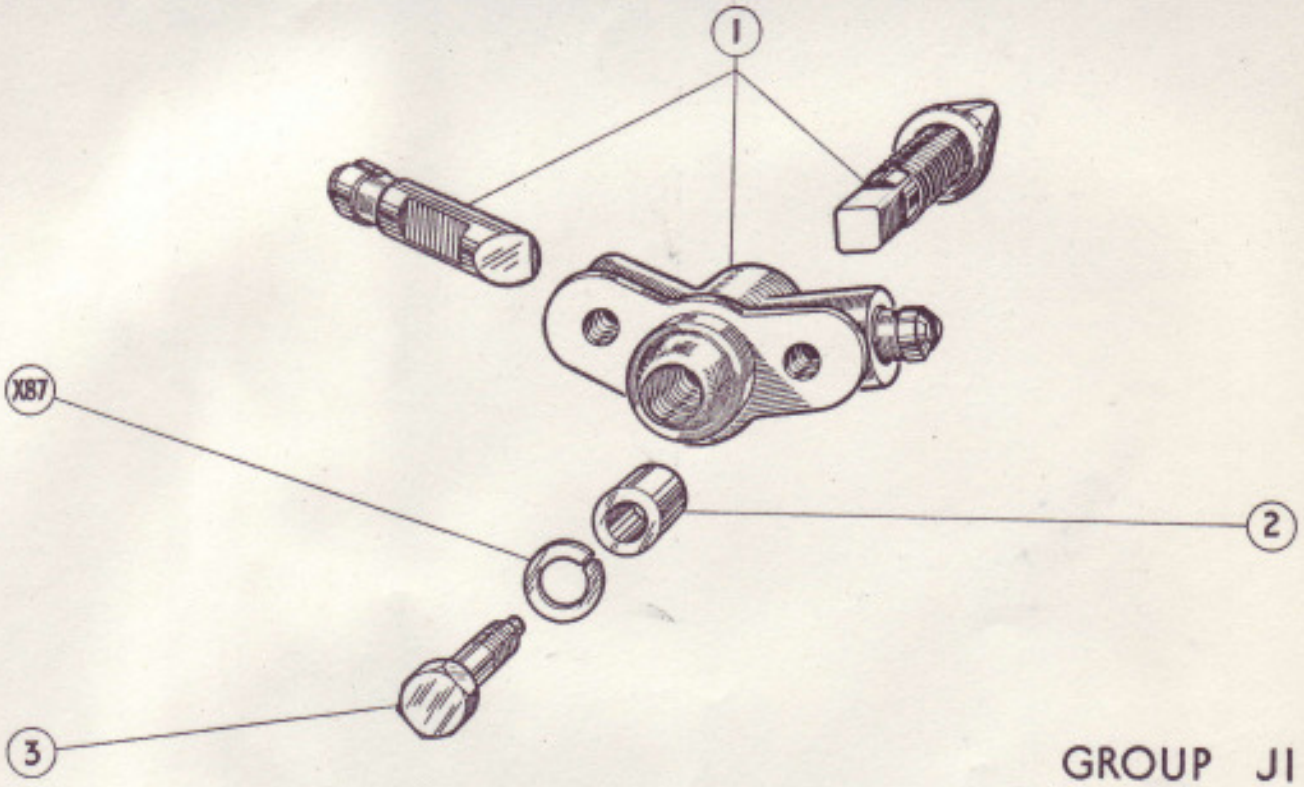

GROUP J1

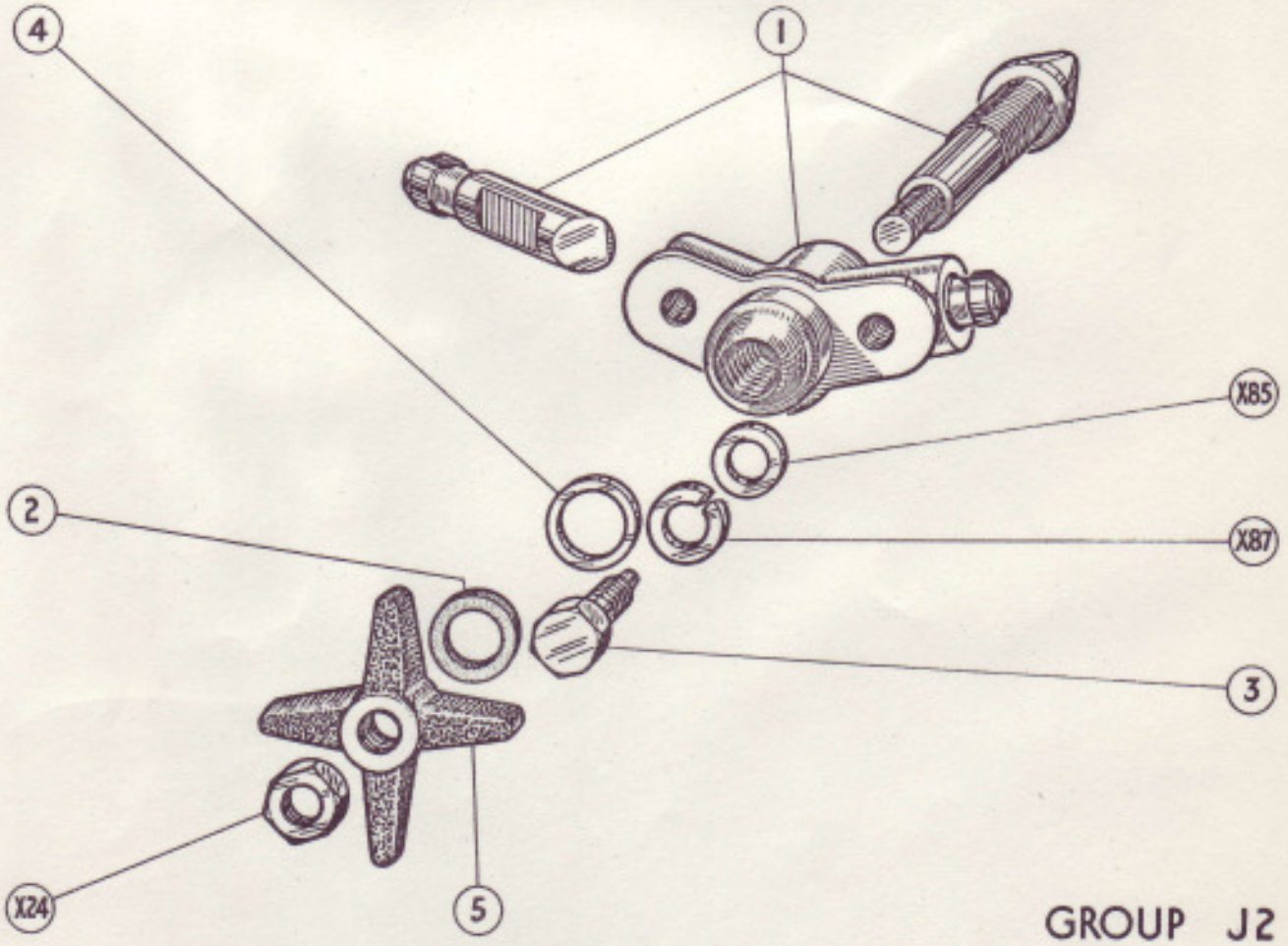

GROUP J2

PRINTED IN ENGLAND

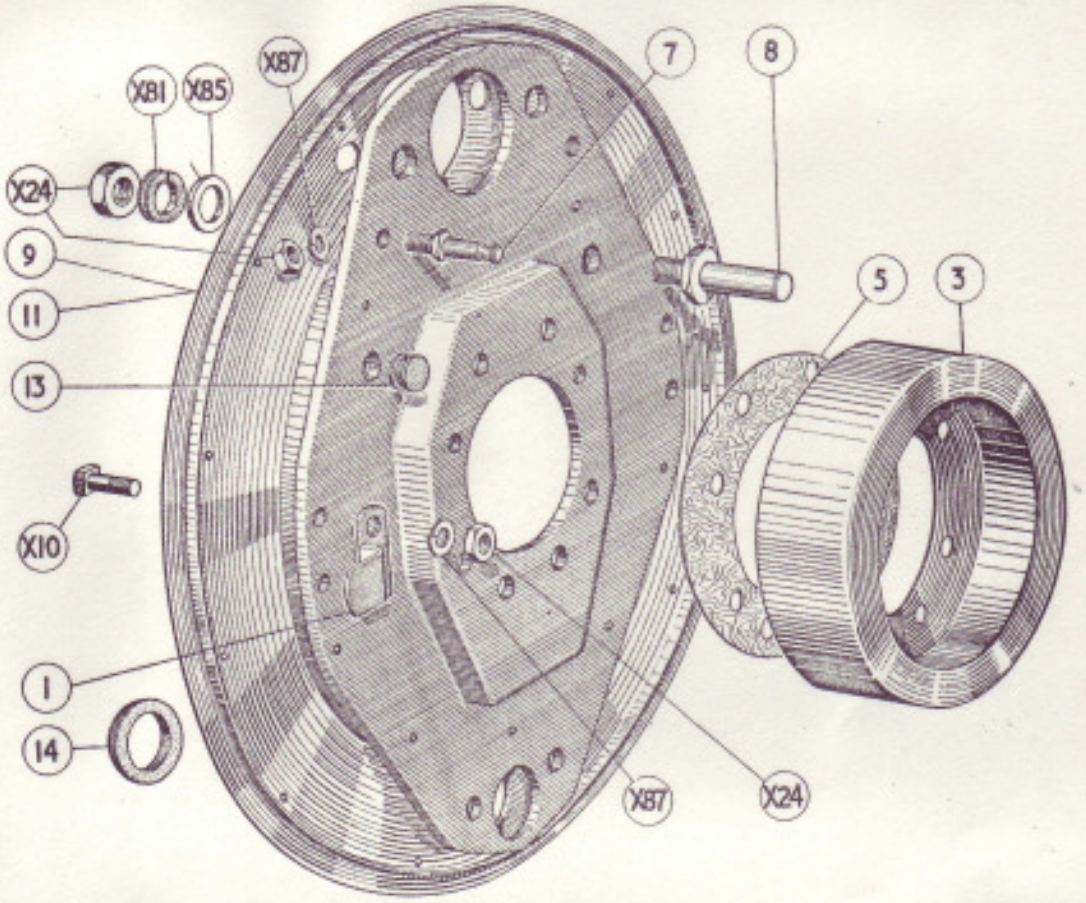
X87
X81
X85
7
8
X24
9
11
5
3
13
X10
1
14
X87
X24

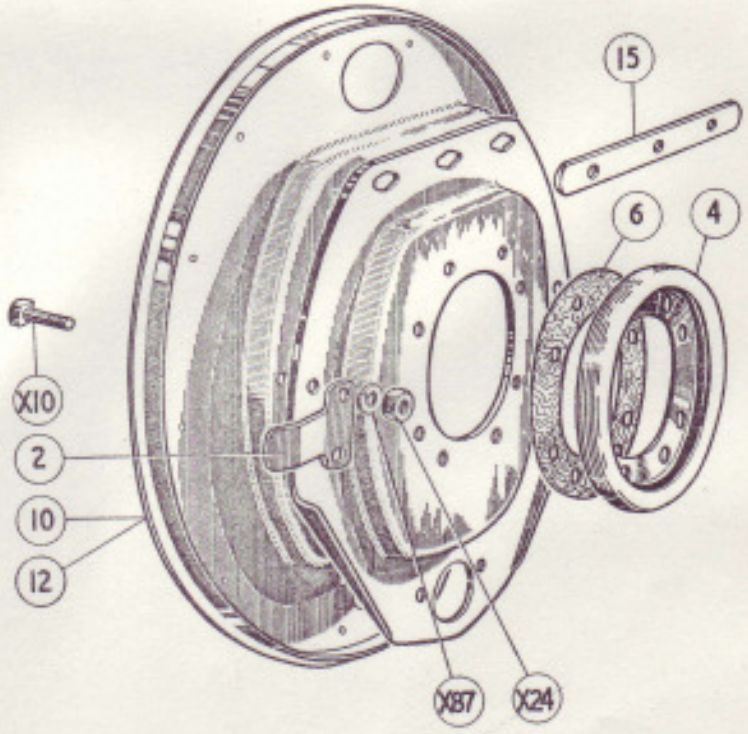
15
6
4
X10
2
10
12
X87
X24

GROUP J3

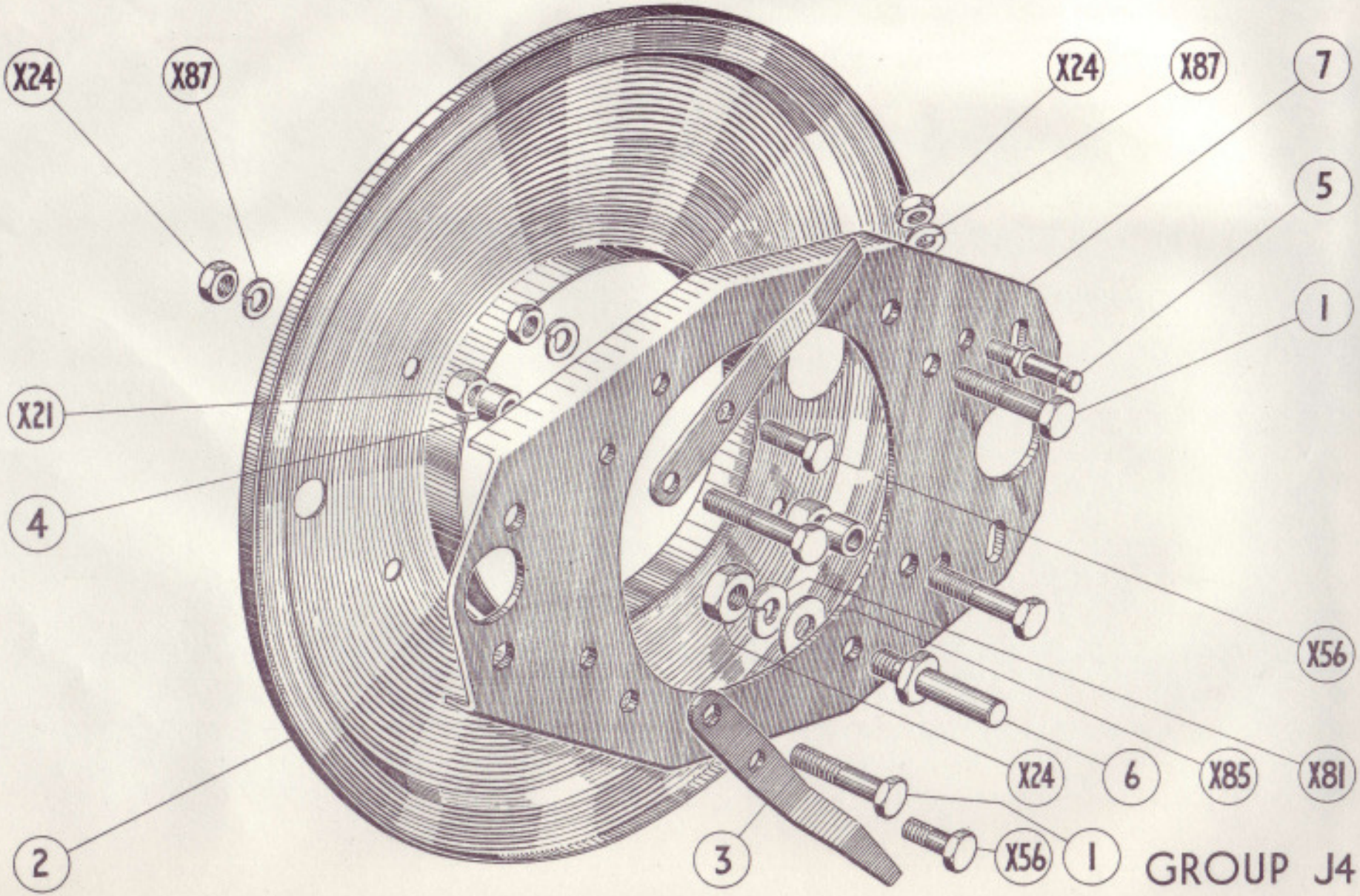

GROUP J4

PRINTED IN ENGLAND

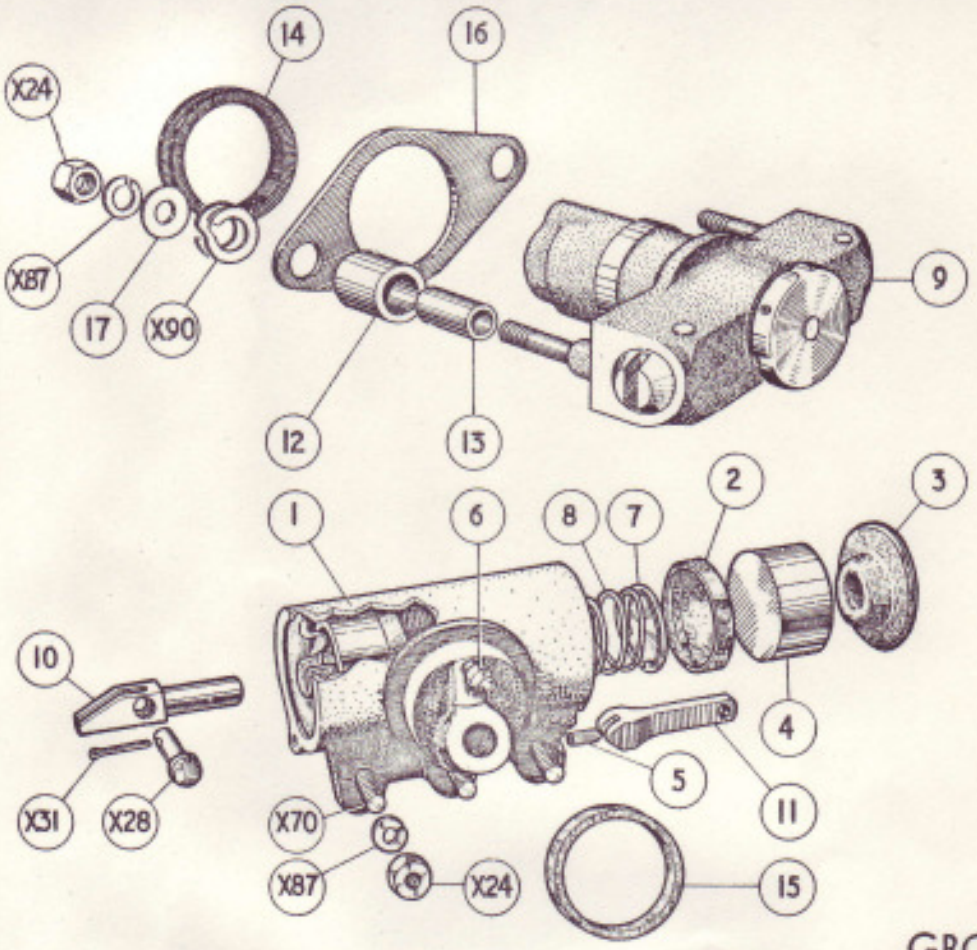

GROUP J5

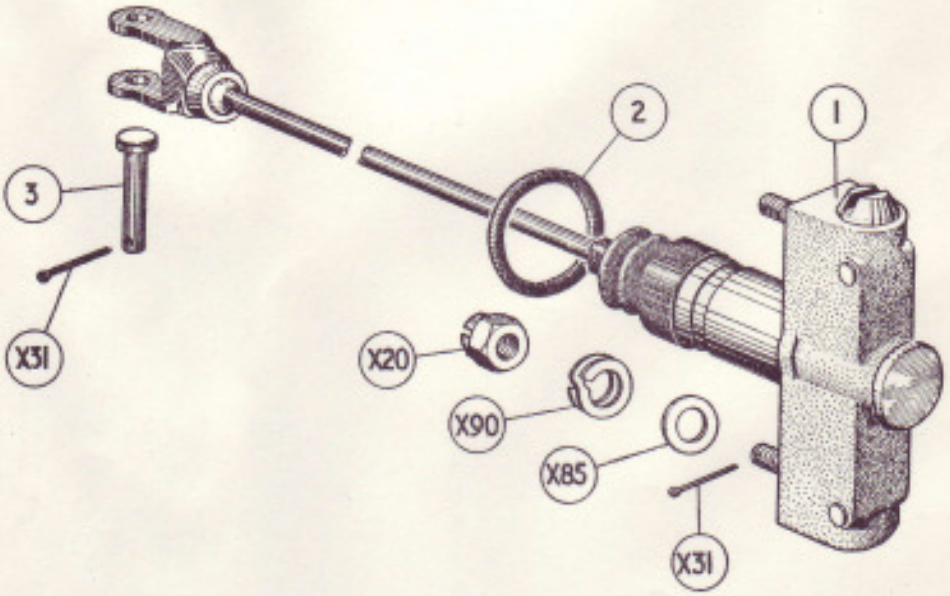

GROUP J6

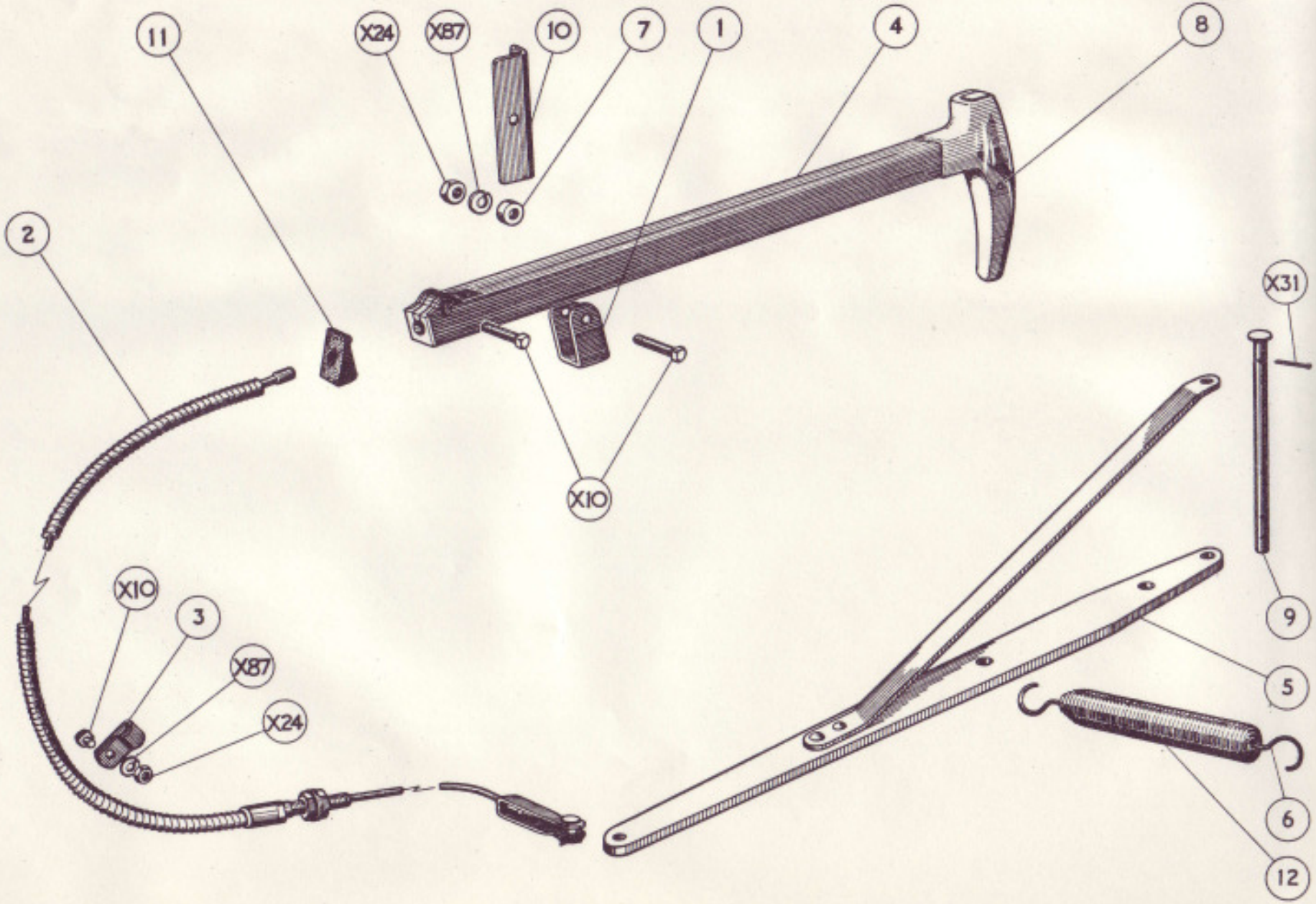

GROUP J 7

PRINTED IN ENGLAND

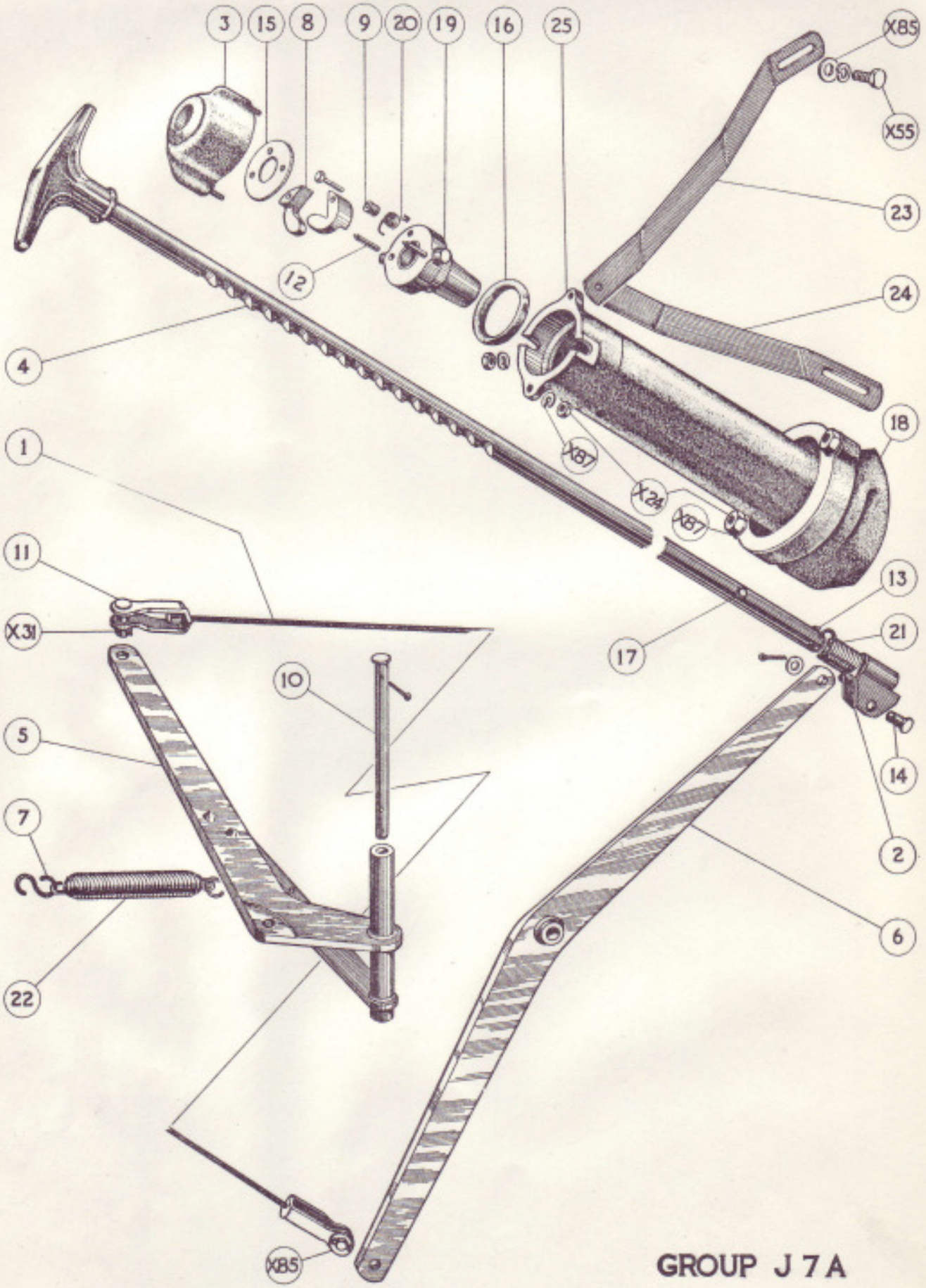
3
15
8
9
20
19
16
25
X85
X55
23
24
12
4
18
1
X87
X24
X87
11
13
X31
21
17
10
5
14
7
2
6
22
X85

GROUP J 7 A

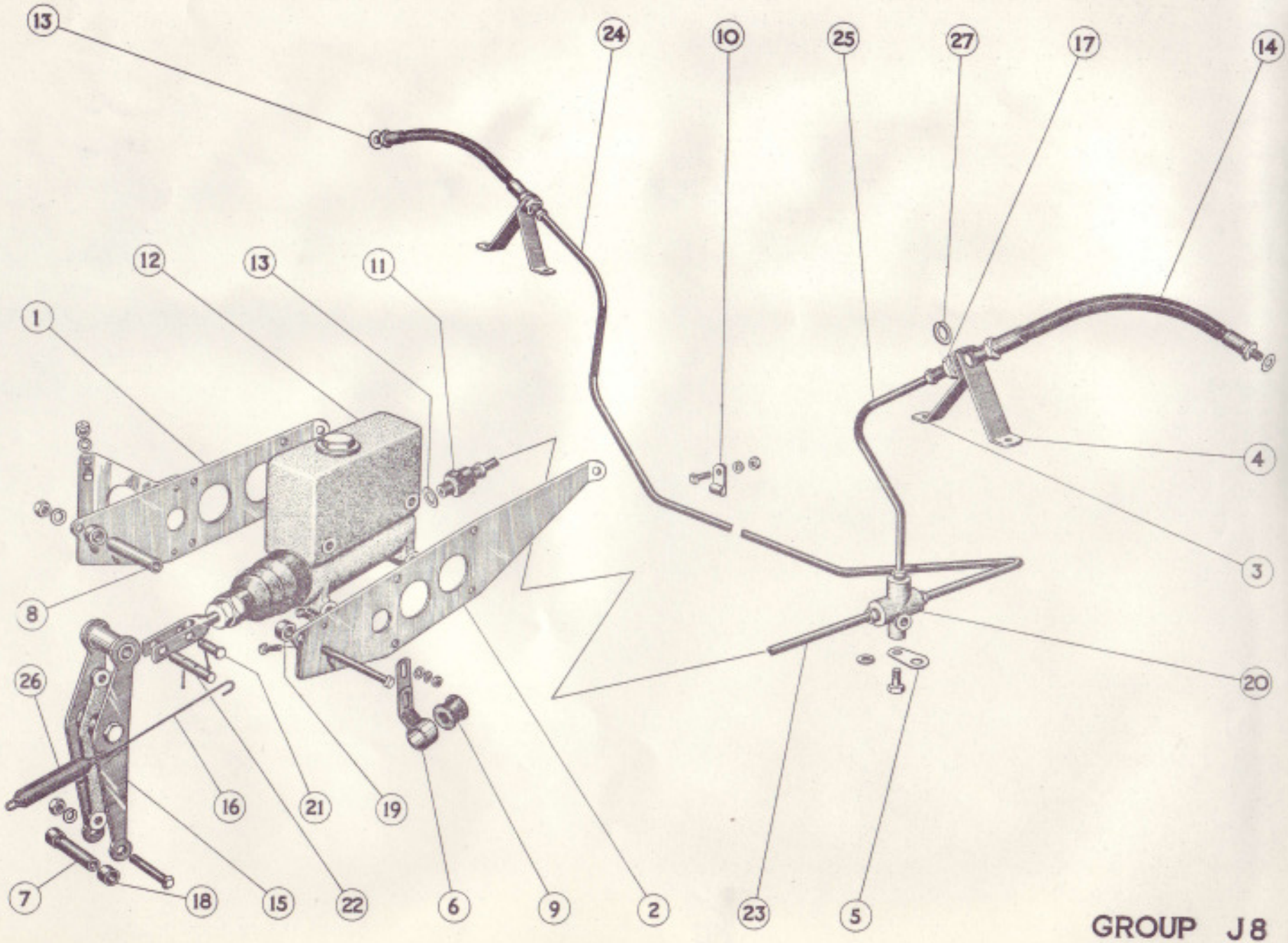

GROUP J8

PRINTED IN ENGLAND

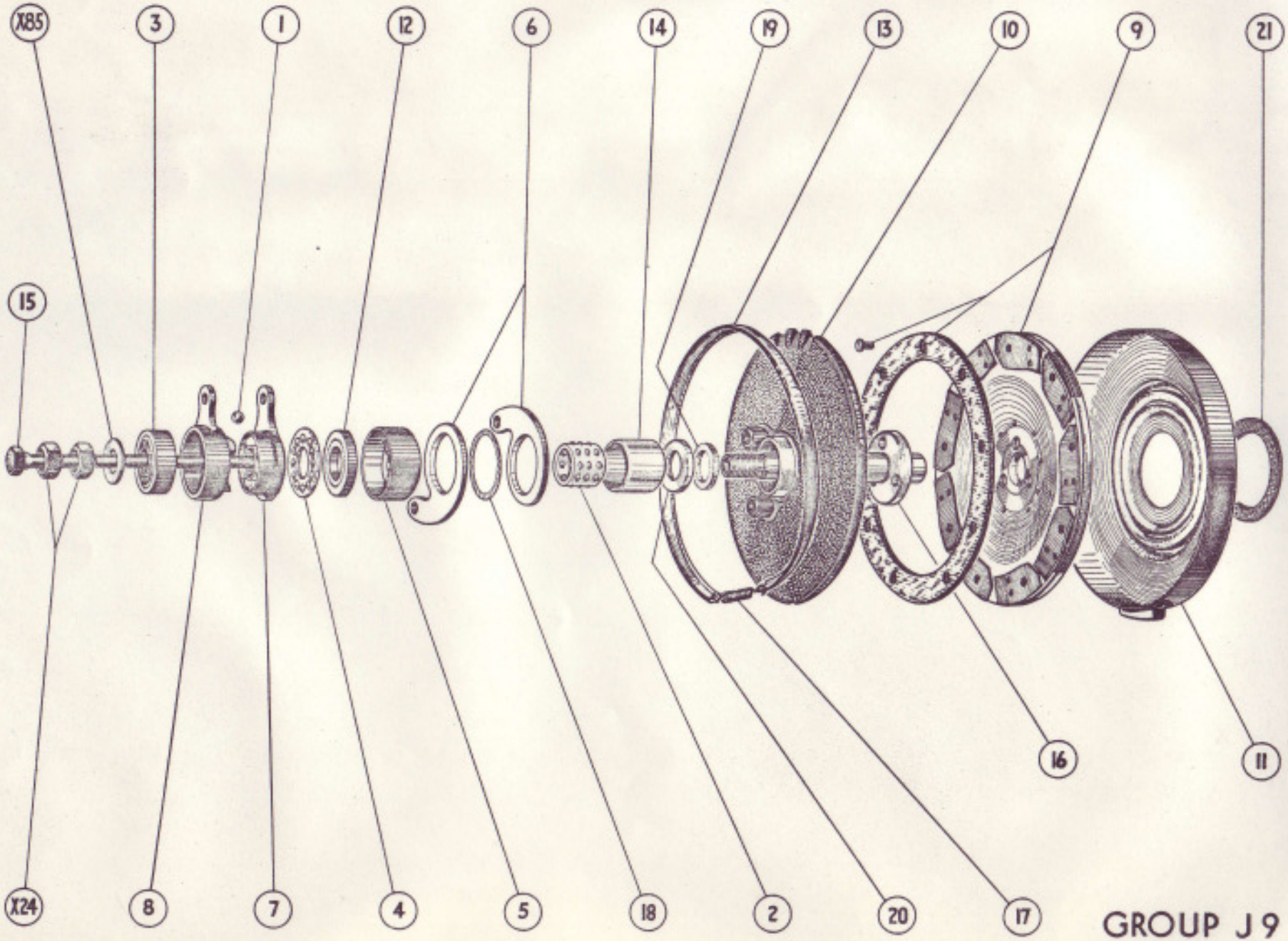

GROUP J 9

PRINTED IN ENGLAND

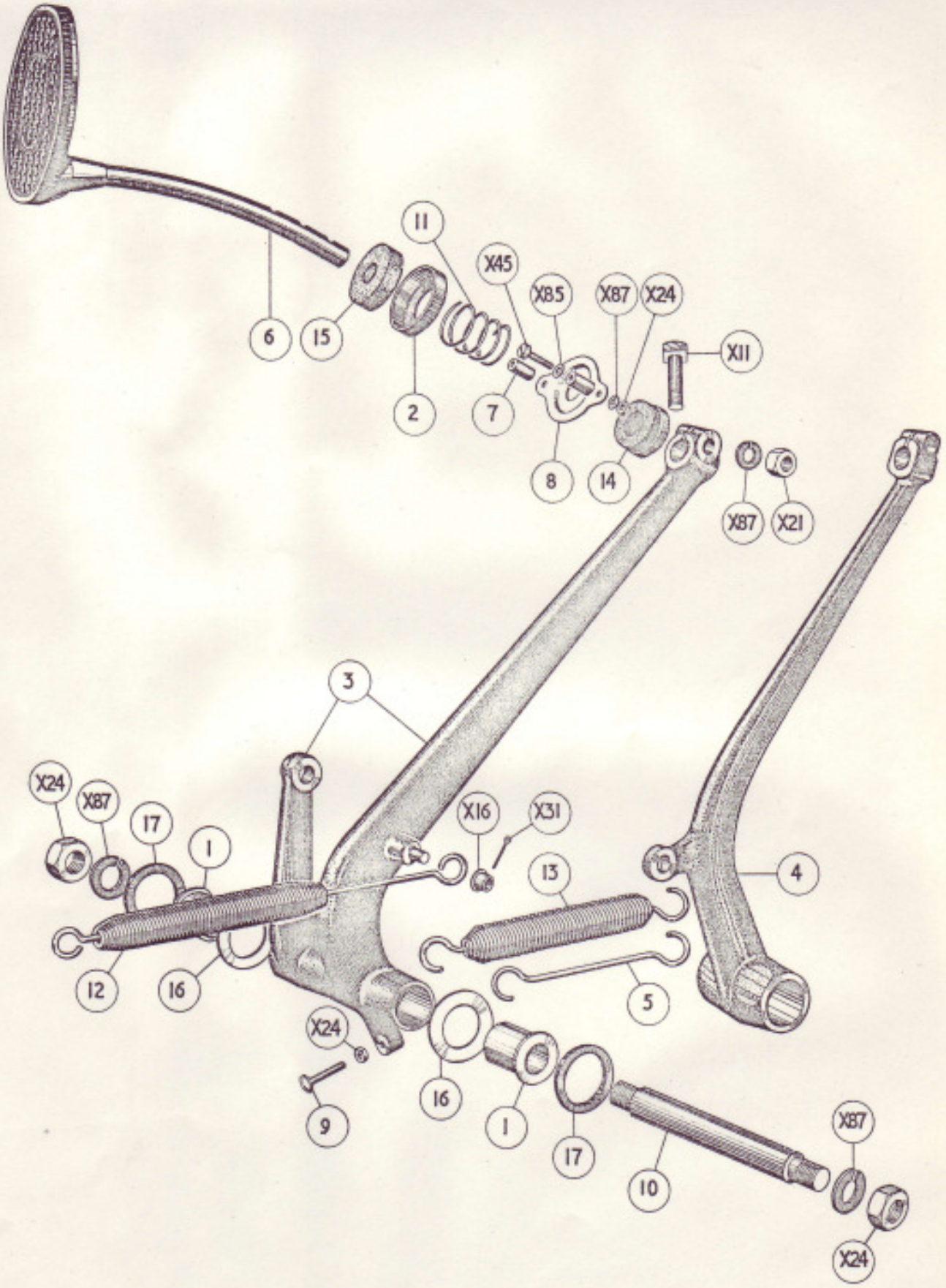

GROUP J10

PRINTED IN ENGLAND

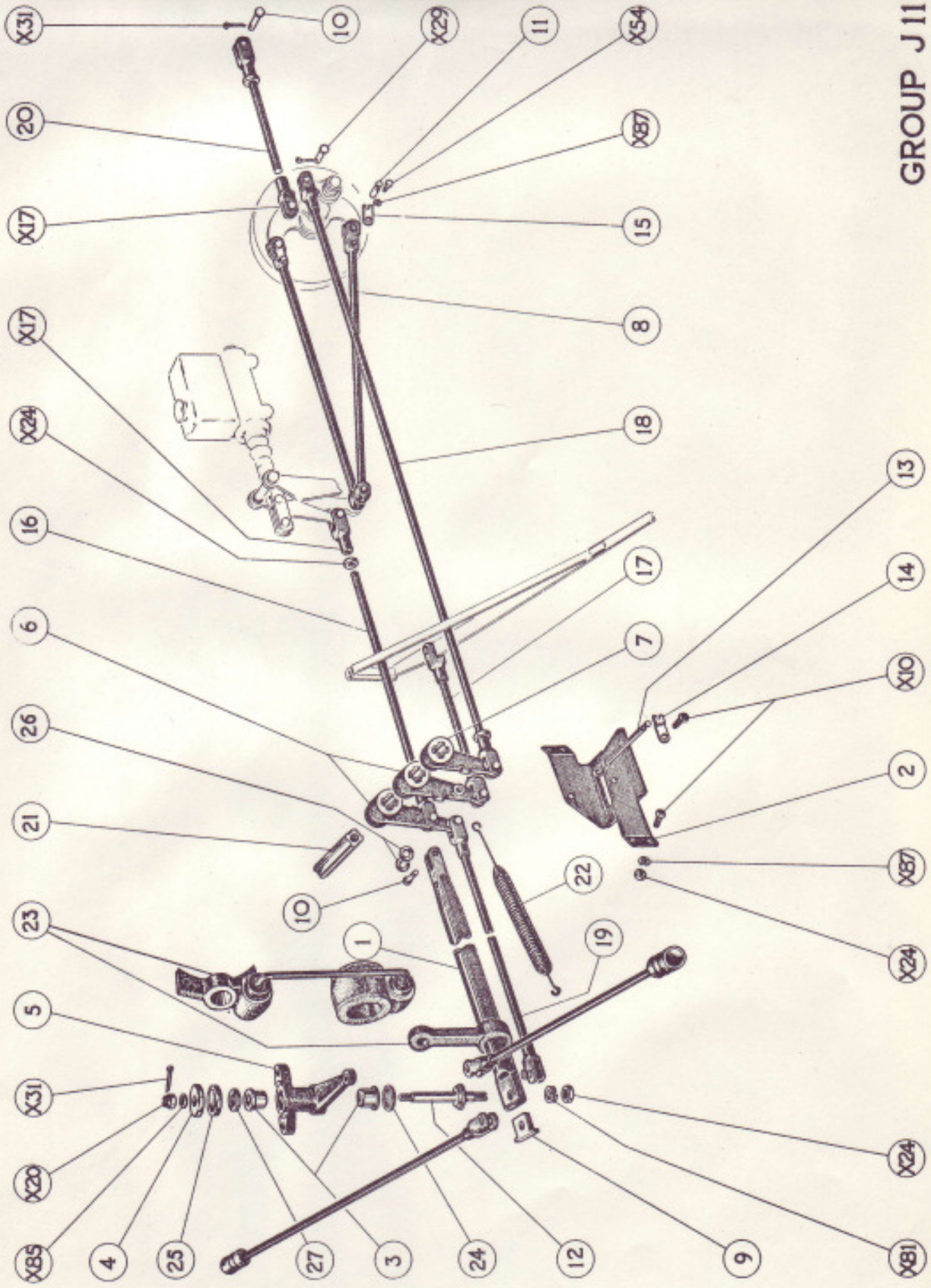
X31
10
X29
11
X54
20
X87
X17
15
8
X17
X24
18
16
13
17
14
6
7
X10
26
2
21
X87
10
22
23
1
19
X24
5
X31
X24
X20
X85
4
25
27
3
24
12
9
X81

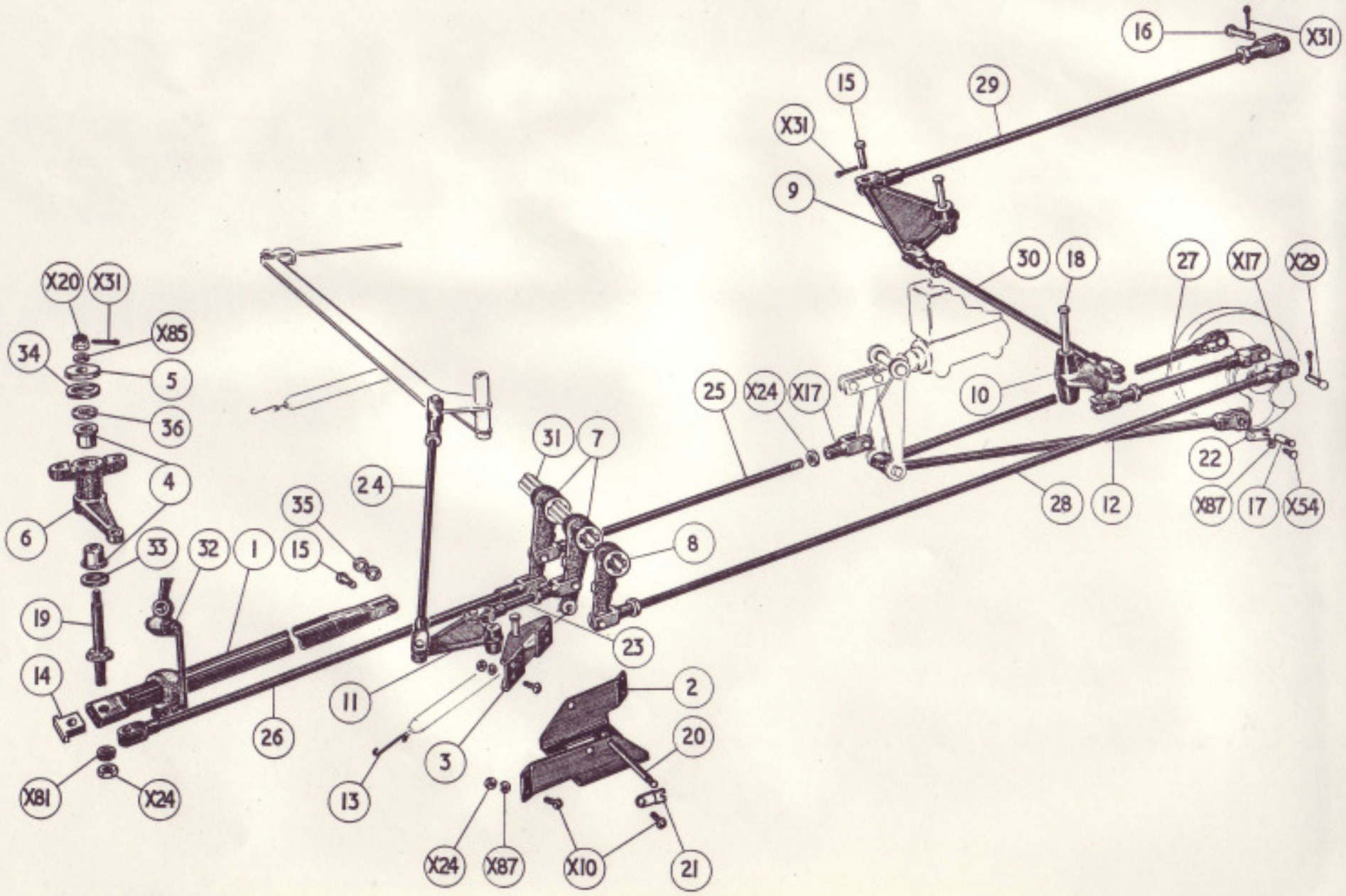

GROUP J11A

PRINTED IN ENGLAND

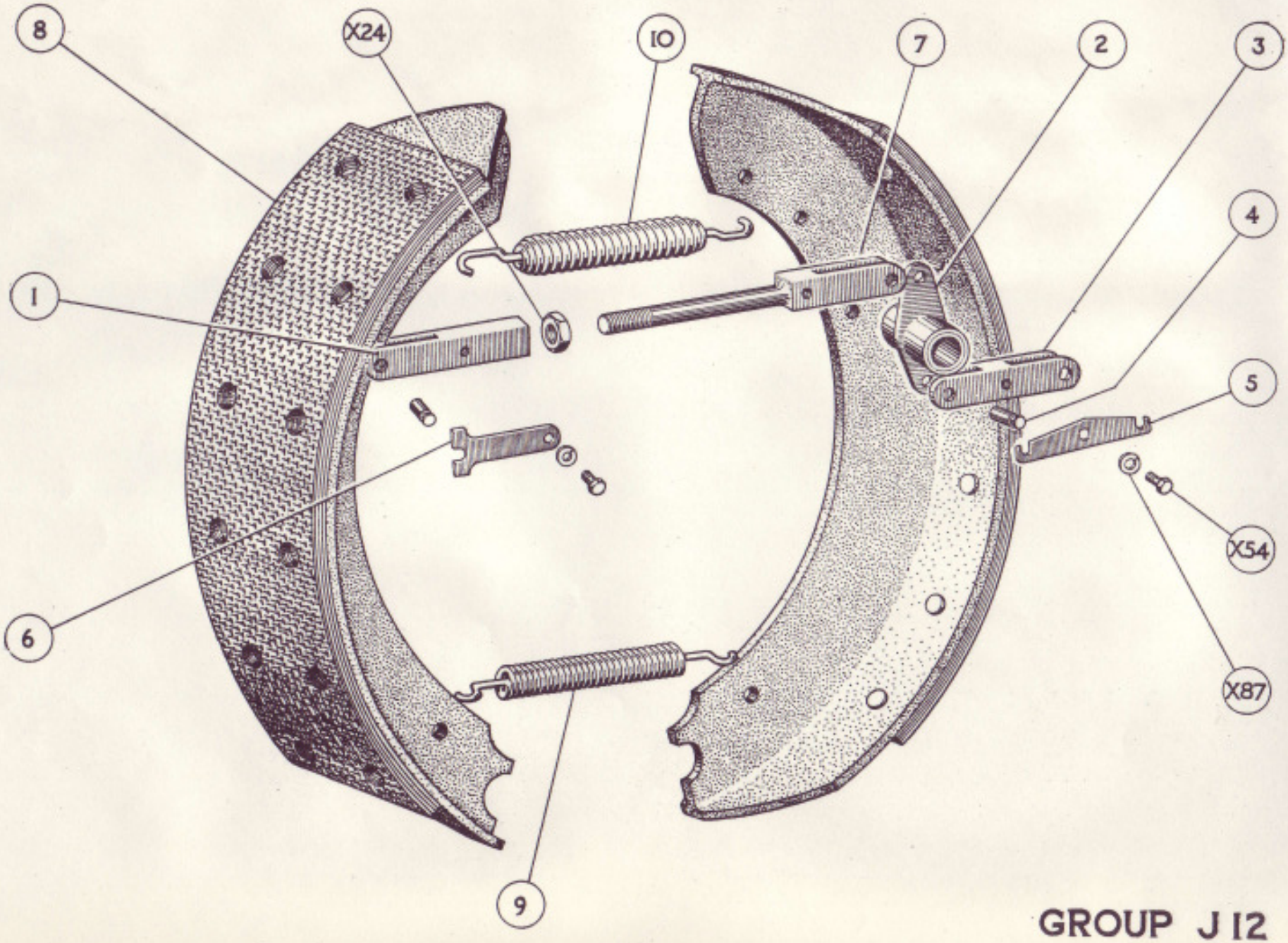

GROUP J 12

PRINTED IN ENGLAND

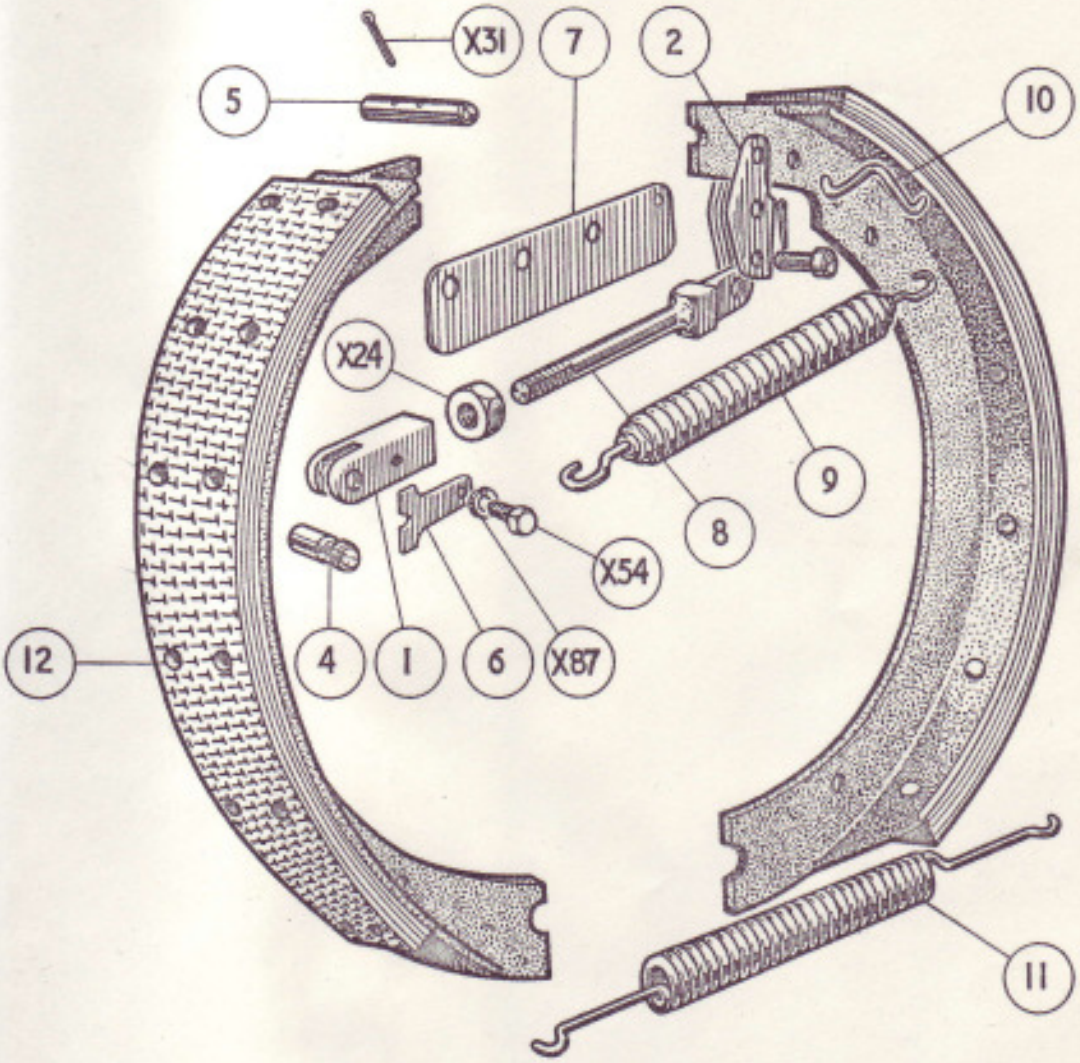

GROUP J12 A

PRINTED IN ENGLAND