Service Bulletins

Bentley Mk VI
Bentley 'R' Type

TSD Publication 552

Printed and Published by
Rolls-Royce Motor Cars Limited
Crewe Cheshire
CW1 3PL England

This publication is a reprint of the original. Whilst the information is given in good faith Rolls-Royce Motor Cars Limited gives no warranty or representation concerning the information and such information must not be taken as forming part of or establishing any contractual or other commitment by Rolls-Royce Motor Cars Limited

©Rolls-Royce Limited 1955

Reprinted by Rolls-Royce Motor Cars Limited 1989

INDEX

TSD 552 SERVICE BULLETINS

Section A - GENERAL INFORMATION

Section B - SPECIAL PROCESSES and SPECIFICATIONS

Section D - LUBRICATION and MAINTENANCE

Section E - ENGINE

Section F - CLUTCH

Section G - GEARBOX

Section J - BRAKES

Section K - FRONT SUSPENSION and FRONT SHOCK DAMPERS

Section L - REAR AXLE

Section M - FUEL SYSTEM

Section N - COOLING SYSTEM-PUMP-FAN

Section P - ELECTRICAL

Section Q - STEERING

Section R - FRAME-REAR SHOCK DAMPERS-ROAD SPRINGS

Section S - EXHAUST SYSTEM

Section T - WHEELS and TYRES

Section U - BODY

CURRENT MODELS.

In order to bring to your notice quickly any important item of information in connection with the servicing of current models, it is proposed to issue a series of Service Bulletins in this form to all Retailers. Any action necessary on the part of Retailers will be instructed from time to time. It is hoped by this means to keep Retailers fully informed of items of special interest where the successful running and maintenance of the car is affected.

A comprehensive Workshop Manual dealing with these cars is in course of preparation, and it is hoped to issue this shortly in loose leaf form. When this manual is available, the Service Bulletins issued from time to time should be filed at the end of the appropriate section in the Workshop Manual.

Additional copies of any Bulletins may be had on request.

Service Bulletins.

ACTION ON MODIFICATIONS.

It has become apparent, following the issue of a number of Service Bulletins on Bentley Mark VI Cars, that a more positive method of defining the urgency of modifications is necessary.

In those Bulletins issued to date, we have endeavoured to indicate the status of a modification by giving appropriate instructions within the context.

It is now considered that this may lead to ambiguity and we therefore propose to institute a scheme for applying a number to each modification to establish the category.

These numbers are as follows:-

Category 1. Urgent modifications or instructions requiring immediate retrospective action.

Category 2. Modifications to be incorporated at a convenient time, e.g., when cars come in for servicing.

Category 3a. Modifications which only require action in the case of an owner's request or complaint.

Retrospective action for Category 1 and 2 modifications is taken during production of cars at the factory at the same time as information is issued to Retailers. Category 3a, modifications on which there is a lower degree of urgency, are also incorporated at the factory but action is not taken on cars in the final stages of assembly if this would involve undue delay in delivery, as, for instance in the case of material shortage. Such modifications need therefore only be introduced when an owner's request or complaint makes them necessary.

These categories, together with the title "Modification", will be applied to all future issues.

Bulletins issued for information only, will not carry this title but will be headed "For Information". Those already issued, should have a category number applied as follows:-

Bentley - Bulletin No.	Category.
BB.1	For Information.
BB.2	" "
BB.3	3a
BB.3a	3a
BB.4	2
BB.7	2
BB.9	2
BB.10	2
BB.11	1
BB.12	2
BB.13	1
BB.5	3a
BB.6	3a
BB.8	For information.

FOR INFORMATION:

CHASSIS SERIES AND NUMBERS

FOR POST WAR CARS.

To facilitate the identification of chassis numbers in relation to modifications, the chassis series in sequence and number of chassis in each series is set out below.

This Bulletin supersedes the previous issue dated 29.11.54, which should be destroyed.

SERIES.	CHASSIS NUMBERS.	REMARKS.
A	B-2-AK to B-254-AK	Even Numbers Only.
	B-1-AJ to B-247-AJ	Odd " "
B	B-2-BH to B-400-BH	Even Numbers Only.
	B-1-BG to B-401-BG	Odd " "
C	B-2-CF to B-500-CF	Even Numbers Only.
	B-1-CD to B-501-CD	Odd " "
D	B-2-DA to B-500-DA	Even Numbers Only.
	B-1-DZ to B-501-DZ	Odd " "
E	B-2-EY to B-500-EY	Even Numbers Only.
	B-1-EW to B-501-EW	Odd " "
F	B-2-FV to B-500-FV	Even Numbers Only.
	B-1-FU to B-601-FU	Odd " "
G	B-1-GT to B-401-GT	Odd Numbers Only.
H	B-2-HR to B-250-HR	Even Numbers Only.
	B-1-HP to B-251-HP	Odd " "
J	B-2-JO to B-250-JO	Even Numbers Only.
	B-1-JN to B-251-JN	Odd " "
K	B-2-KM to B-200-KM	Even Numbers Only.
	B-1-KL to B-201-KL	Odd " "
L	B-2-LJ to B-400-LJ	Even Numbers Only.
	B-1-LH to B-401-LH	Odd " "
M	B-2-MD to B-400-MD	Even Numbers Only.
	B-1-MB to B-401-MB	Odd " "

(Cont'd)

SERIES.	CHASSIS NUMBERS.	REMARKS.
N	B-2-NZ to B-500-NZ B-1-NY to B-501-NY	Even Numbers Only. Odd " "
P	B-2-PV to B-300-PV B-1-PU to B-301-PU	Even Numbers Only. Odd " "
R	B-2-RT to B-120-RT B-1-RS to B-121-RS	Even Numbers Only. Odd " "
S	B-2-SR to B-500-SR B-1-SP to B-501-SP	Even Numbers Only. Odd " "
T	B-1-TO to B-401-TO B-2-TN to B-600-TN	Odd Numbers Only. Even " "
U	B-1-UL to B-251-UL B-2-UM to B-250-UM	Odd Numbers Only. Even " "
W	B-2-WH to B-300-WH B-1-WG to B-301-WG	Even Numbers Only. Odd " "
X	B-2-XF to B-140-XF	Even Numbers Only.
Y	B-1-YA to B-331-YA B-2-YD to B-330-YD	Odd Numbers Only. Even " "
Z	B-1-ZX to B-251-ZX B-2-ZY to B-250-ZY	Odd Numbers Only. Even " "

NOTE:- Where the letter 'L' precedes the chassis series letters, this denotes that it is a left-hand drive chassis. Example B-46-LEY (L.H.Drive). Where a number exists for an L.H. drive chassis, such as the above, this number, i.e. 46 is not duplicated for a right-hand drive chassis.

CONTINENTAL SPORTS SALOON.

SERIES.	CHASSIS NUMBERS.	REMARKS.
A	BC-1-A to BC-26-A	All Numbers.
B	BC-1-B to BC-25-B	" "
C	BC-1-C to BC-78-C	" "
D	BC-1-D to BC-74-D	" "
E	BC-1-E to BC-9-E	" "

This information is strictly confidential.

No.13 is omitted from all chassis series.

FOR INFORMATION (STRICTLY CONFIDENTIAL)

MODIFICATION DATA

To provide Retailers with a summary of the inclusion of the more important modifications on production, the following data, chassis numbers and series are set out below.

In some cases a number of chassis were modified prior to those stated below.

The chassis numbers quoted refer to the commencement of the continuous embodiment of these modifications on production.

A	Servo Damper	B. 70-AK
	Squirt Hole in Connecting Rods	B.126-AK
	Shock Absorber Screwed Inserts	B.250-AK
	Twin Ignition Coils	B. 1-AJ
	Parkerised Tappets	
	Hardened Push Rods	B. 31-AJ
	Modified Horn Push Button	B.185-AJ
B	AC Air Cleaner	B. 2-BH
	SC Carburetter Needles	
	Strengthened Wheel Disc Flange	
	Heater Return Tap Deleted	B. 70-BH
	Heater Drain Tap Added	
	Provision for 5" Dynamo	B.122-BH
	Rocker Cover Breather	B.198-BH
	Modified Interior Door Locks	B.228-BH
	Increased Synchro Cam Angles	B.292-BH
	Modified Distributor Drive Spring Ring	B.398-BH
	Increased Front Shock Absorber Loading	B.185-BG
	Nebar Rocker Cover Joint	B.303-BG
	Export Body Modifications	B.321-BG
C	Aluminium Tappet Doors	B. 2-CF
	Larger Rear Hub Bearings	
	Bronze Exhaust Valve Guides	B. 26-CF
	Modified Clutch Thrust Race	B.164-CF
	Solid Door Striker Plates	B.206-CF
	Horn Suppressor	B.218-CF
	Dunlop Jacks	B.236-CF
	Wider Opening Radiator Shutters	B.320-CF
	2.4" Servo Balance Lever	B.344-CF
	5" Dynamo	B.426-CF
	C. & A. Cylinder Head Gasket	B. 1-CD
	Accelerator Countershaft Guard	
	13° Brake Expanders	B. 17-CD
	25° Servo Cams	
	Modified Coolant Pump	B.115-CD
	Improved Rubber Door Seals	B.347-CD
	Servo Protection Plate	
	Modified Quicklift Window Stop	B.363-CD
	Extended Petrol Tank Breather	B.475-CD
D	Low Lift Camshaft	B. 2-DA
	Lucas Screen Wipers	
	Modified Core Plugs	
	Oil Caps in No. 7 Journal	B. 62-DA
	Bench Type Spring Drive	B.128-DA
	Longer Upper Triangle Levers	B.134-DA
	Short Cylinder Inserts	B.144 DA
	Rear Shock Damper Linkage Modification	B.200-DA
	Battery Charging Plug	B.252-DA
	Larger Frontal Area Radiator	B.270-DA
	Anti-Spill Valve in Radiator	
	Chromium-plated Servo Plate	B.384-DA
	Strengthened Door Hinges	B.420-DA
	Increased Diameter Scuttle Drain	B.492-DA
	⅞" Cylinder Studs	B. 95-DZ
	N.S. Front Window Winder	B.117-DZ
	Improved Window Run Channels	B.131-DZ
	Square Edge Bearing, 1st and 3rd Mot. Shafts	B.150-DZ
D	Strengthened 3rd Mot. Shaft Splines	B.159-DZ
	8¼" Deflection Front Springs	B.193-DZ
	Radiator Heated De-mister	
	Dip and Switch Headlamps	
	Modified Underseat Heater	B.237-DZ
	Export Features on all Cars	
	Fixed Guide to Front Windows	
	22¼" Servo Cams, 3" Balance Levers	B.241-DZ
	Heater Return Tap Re-introduced	B.273-DZ
	Revised Inter-Shoe Brake Linkage	B.493-DZ
E	Split Skirt Pistons	B.2-EY
	Granodised Piston Rings	B.120-EY
	Portable Hand Inspection Lamp	B.162-EY
	Luggage Boot Water Trap	B.264-EY
	Progressive Bump Stops	B.466-EY (B.126-LEY)
	⅞" Dia. Rear Axle Bolts	B.1-EW
	Closer Fitting Tappets	B.57-EW
	Graded Pistons	B.111-EW
	Commonised Dash	B.273-EW
	Forged Rear Spring Shackle Brkt.	B.403-EW
F	Internal Oil Feed to Distr.	B.2-FV
	Longer Gear Lever	B.138-FV
	Modified Rear S.D. Plates	B.444-FV
	Trico Windscreen Washer	B.1-FU
	Modified S.S. Tube Socket	B.244-FU
	Modified X.S. Tube Sockets	B.281-FU
G	Revised Steering Geometry	B.1-GT
	Thicker Lipped Brake Drums	
	Anti-Rumble Brakes	
	2nd Mod. to Rear S.D. Plates	B.67-GT
	Four Foot Mounted Air Silencer	B.111-GT
	Improved Rear No. Plate Box	B.165-GT
	Revised Bijur Pipes to Rear Shackles	
	Reduced Speed Fan	B.213-GT
	Keyhole Sockets on Gear Control	B.281-LGT
	One Piece Rear Brake Equ-Lever	B.381-GT
H	Aluminium Cam Wheel	B.2-HR
	Electric Clock	
	Low Rate Oil Feed to Clutch Thrust	
	11" Clutch (Light Type)	
	3 Bush Rear Brake Equ-Support	
	Mod. Starter Solenoid Switch	
	Lower Bush R.S.D. Link Deleted	B.110-HR
	Speedo Dip Warning Light	B.31-HP
	Large Bore Carburettors	B.83-HP
	Mod. Clutch Spigot Bearing	
	Closer Fitting 2nd & 3rd Speed Bushes	B.95-HP
	Triple Pass De-mister Inter. Scheme	B.149-HP
	Longer Bosses on R.S.D. Plates	B.179-HP
J	Thicker R.S.D. Plates	B.154-JO
	Mod. Water Pump Gland Ring	B.61-JN
K	Triple Pass R.H. De-mister (Final)	B.2-KM
	Modified Ammeter	B.64-KM
	New Type Ignition Condenser	B.117-KL

MODEL: BENTLEY MARK VI

L	Steel Oil Caps in Crankshaft	B-40-LJ
	Oil Feed Adaptor Air Bottle	B-170-LJ
	11" Heavy Type Clutch	B.300-LJ
M	3¼" Bore Engine	B.2-MD
	Thickened C'shaft Webs	
	Full Flow Oil Filter	
	Twin Exhaust System (R.H. cars only)	
	Side Scuttle Ventilators	B.29-MB
	Insulated Dynamo	B.313-MB
N	Increased Front Damping	B.210-NZ
	Twin Condensers	B.292-NZ
	SP Carb. Needles (R.H. cars only)	B.478-NZ
	Short dwell detent on 1st gear selector	B.500-NZ B.360-LNZ
	Repositioned Oil Gauge Conn. on C'case.	B.123-NY
	Mk. II Headlamp	B.169-NY
	Stiffened Clutch Casing	B.253-NY
	3-position Heater and De-mister Switches.	B.311-NY
	120° Opening Ventilator Windows	
	Rear Window De-mister	
P	Reversion to Old Type Front Wheel Studs.	B.22-PV
	Solid Pins and Shield on Servo	B.284-PV
	Hot and Cold Demister	B.53-PU
	Exhaust Heat Shields	B.159-PU
	Needle Rollers in Clutch Release Levers	B.185-PU
	Reduced Friction on Steering Connections	B.215-PU
R	Revised Luggage Boot	B.2-RT
	Automatic SU Carburettors	
	Revised Attitude Rear Springs	
	Revised Rear Shock Damper Linkage	
	Two Speed Windscreen Wiper	
	Pop-out Cigar Lighter	
	Separately Housed Main Fuse	
	Castor Angle Wedges	
	Corrugated Bottom Water Hose Connection	B.68-RT
S	Taper Roller Bearings on Rear Axle Pinion (except 12/41 Axle)	B.380-SR
	3½ Seconds Slow Leak on Front Shock Dampers	B.61-SP
	Parco Lubrized Tappets	B.425-SP
	Taper Roller Bearings on Rear Axle Pinion 12/41 Axle	B.433-SP
T	6.75 Compression Ratio Cylinder Head	B.93-TO
	Deletion of Non-Opposed Springs in Side Steering Tube	B.313-TO
	All Welded Frames	B.349-TQ
	Metal Facia	B.2-TN
	Cable Operated Hot and Cold De-mister and Underseat Heater	
	Hard Clay Gasket	B.372-TN
	Deletion of Reduced Friction Modification on Steering Connections	B.390-TN
	Revised Throttle Controls for Synchromesh Gearbox	B.436-TN
U	Aluminium Flywheel Housing	B-35-UL
	Improved Type Underseat Tool Tray	B-66-UM
	Introduction of B-VI Type Gearbox Tie Rod	B-212-UM
W	Flywheel Inertia Ring on Cars with Auto Gearbox	B-236-WH
	Dynamo Type Mounting Strap on Starter Motor	B-270-WH
	Thicker 3rd Motion Shaft Thrust Washer	B-89-WG
	Compensator Pipe between Front and Rear Servo	B-183-WG
X	Strengthened Jaws on Front Brake Operating Links	B-60-XF
Y	12/41 Rear Axle (all Cars)	B-1-YA
	Elimination of Chromium-plated Servo Pressure Plate	B-123-YD
	Long Stroke Starter Pinion	B-138-YD
	Flexibox Seal on Water Pump	B-160-YD
	Bentley Continental Type Demisting	B-246-YD
Z	Improved Cold Starting Device	B-1-ZX
	2nd Speed Start	B-73-ZX
	Ferodo Washers and Drain Slots in Crankshaft Vibration Damper	B-212-ZY

CONTINENTAL

A	Reduced Compression Height Pistons	BC-19-A
C	Commonised Cylinder Head	BC-4-C
	Deletion of Non-Opposed Springs in Side Steering Tube	BC-18-C
	All Welded Frame	BC-21-C
	Deletion of Reduced Friction Modification on Steering Connections	BC-30-C
	Introduction of B.VI Type Gearbox Tie Rod	BC-50-C
	Flywheel Inertia Rings on Cars Fitted with Auto Gearbox	BC-70-C
	Thicker Third Motion Shaft Thrust Washer	BC-78-C
D	3¼" Bore Engine	BC-1-D
	Compensator Pipe between Front and Rear Servo	
	Strengthened Jaws on Front Brake Operating Links	BC-5-D
	Elimination of Chromium-plated Servo Pressure Plate	BC-12-D
	Flexibox Seal in Water Pump	BC-35-D
	Long Stroke Starter Pinion	BC-37-D
	Improved Cold Starting Device	BC-43-D
	2nd Speed Start	BC-47-D

FOR INFORMATION:

PREPARATION FOR SERVICE AFTER SHIPMENT.

Bentley Mark VI cars prepared for shipment are protected against deterioration in transport in the following manner:-

The engine and gearbox are drained, and a small quantity of mineral oil, insufficient for running purposes, is run into the working parts of both as a protection against corrosion. The cylinder bores are treated with inhibitor and there is no need to prime the cylinders with oil before starting the engine. The rear axle is filled with the recommended grade of lubricant, Wakefield's Special Hi-Press S/C, and requires no attention beyond checking to ensure that the level is still correct.

To prevent the clutch lining fabric adhering to the friction faces the clutch is held in the disengaged position by a wooden block. The engine breather, air silencer and exhaust pipe are blanked off, and an uncharged battery is fitted. In special cases where a fully charged battery is fitted, the terminals are disconnected.

The following procedure is recommended for putting the car into service:-

1. Before Starting the Engine:

(a) Fill engine and gearbox with one of the recommended oils which are as follows:-

	Engine. (Visc.SAE 20)	Gearbox. (Visc. SAE 30)
Price's Motorine.....	E.	M.
Wakefield's Castrol.....	Castrolite.	XL.
Vacuum-Mobiloil.....	Arctic.	A.
Shell.....	Single.	Double.
Duckham's Adcoidised.....	N.P.X.	N.P.XX.
Essolube.....	20	30
Silvertown Speedolene.....	20	T.

The capacity of the engine is 16 pints (9.1 litres) and the gearbox 6 pints (3.4 litres).

(b) Check rear axle oil level.

(c) Remove block holding clutch out.

(d) Remove protecting covers from engine breather, air silencer and exhaust pipe.

(e) Fill radiator with suitable coolant (See Instruction Book)

(f) Fit charged battery if necessary.

Issued by BENTLEY MOTORS (1931) LTD. SERVICE STATION, CREWE.

PRINTED IN ENGLAND

2 Starting and Running Engine:

Start engine in normal way. Run engine slowly until maximum oil pressure is being recorded on the gauge. Open throttle (using throttle lever on quadrant) until the engine is running at approximately 800 revs per minute. This speed is obtained by placing the throttle lever approximately one third up the quadrant from the closed position.

3. Driving:

Take car on the road and work up the engine very slowly from slow running conditions to full power. The longer the time taken and the greater the care with this operation, the better it will be for the future satisfactory running of the car.

Lack of proper attention when first putting the car into commission, e.g. immediately starting up and driving away from the docks. may cause considerable trouble at a later date. With such treatment, the lubrication is inefficient, working parts distort, piston knocks develop, with generally unsatisfactory running and possibly over-heating and over-oiling.

This bulletin cancels all previous Service Bulletins numbered BB-16

PERIODIC LUBRICATION AND ADJUSTMENT

SCHEDULE "A", "B" & "C"

GENERAL:

For the purpose of assisting Retailers with the maintenace of Bentley cars in their areas, a system of periodic lubrication and adjustment on a fixed mileage basis has been evolved.

It is recommended that Retailers institute this as a normal maintenance routine and that appropriate arrangements be made with any owners wishing to avail themselves of this service. We would also stress the value of this service in maintaining a permanent contact with all known owners in a Retailer's territory.

It will be noticed that this system is a consolidation of the various maintenance routines into three sections or schedules, and as such, does not in any way supersede the instructions given in the handbook to owners desirous of carrying out their own maintenance inspections.

The three Schedules "A", "B" and "C" cover the whole vehicle and operate in the following manner:-

SCHEDULE "A" :- To be carried out at the conclusion of every 5,000 miles, covers all the items associated with engine, chassis and coachwork requiring lubrication, cleaning and adjustment.

SCHEDULE "B" :- To be carried out at the conclusion of every 10,000 miles. In addition to the repetition of the whole of Schedule "A", it covers the complete change of lubricant of all the main components, together with the inspection and rectification of those items not included at the lower mileage.

SCHEDULE "C":- To be carried out at the conclusion of every 20,000 miles. This schedule especially covers the requirements of periodic servicing of the automatic gearbox, rear axle and the propellor shaft ball and trunnion joint (where applicable).

SCHEDULE "A"

EVERY 5,000 MILES

LUBRICATION:

1. Bonnet fasteners and locks.
2. Door locks and hinges and boot lid lock.
3. Ignition distributor shaft, contact breaker pivots and cam.
4. Steering column controls, accelerator mechanism.
5. Brake system pivot pins and bearings.
6. Propellor shaft universal joints (3 points) and sliding joint (1 point)

OIL LEVEL CHECKS:

1. Steering box, (or pump reservoir on power assisted steering gear).
2. Chassis lubrication tank.
3. Brake master cylinder reservoir.
4. Gearbox.
5. Rear axle.
6. Front and rear shock absorbers.
7. Drain and refill crankcase. Renew oil filter element.
8. Carburetter air valve guides.

ENGINE AND CHASSIS ADJUSTMENTS:

1. Check coolant level and top up if required (When climatic conditions warrant, check specific gravity of coolant and advise owner if additional anti-freeze is required).
2. Check fan belt and power steering pump driving belts where applicable. Adjust if necessary.
3. Check and reset inlet tappet clearances.
4. Clean sparking plugs. Check and reset gaps.
   Note Lodge CLNP platinum pointed plugs should be cleaned by abrasive means as infrequently as possible. We recommend that this should not be done at intervals of less than 20,000 miles unless the Retailer has Lodge Platinum Plug Special Cleaning Equipment.
5. Clean contact breaker points. Reset gaps check and reset ignition timing.
6. Check functioning of fuel pump (Disconnect electrical leads and check each pump independently).
7. Check and adjust clutch pedal free movement (Synchromesh gearbox).
8. Adjust brakes and servo.
9. Check for excessive leakage at any point in the central chassis lubrication system.
10. Check and adjust tyre pressures.
11. Clean oil bath air filter element if fitted and refill with oil.
12. Clean carburetter air valves.

ELECTRICAL SYSTEM:

1. Check battery acid level. Top up with distilled water if required. Clean, re-vaseline and tighten battery teminals.
2. Check complete electrical system for correct functioning.

ROAD TEST:

1. Test car on road.

SCHEDULE "B"

EVERY 10,000 MILES

1. Repeat Schedule "A".
2. Drain and refill gearbox (Synchromesh type only).
3. Drain and refill rear axle.
4. Check starter motor reduction gear oil level and refill if required.
5. Clean carburetter air filter element.
6. Clean the fuel strainers.
   1. The main fuel filter on the chassis cross member just forward of the petrol tank.
   2. The filter gauze in the carburetter float chamber feed connection.
   3. The filter gauzes in the fuel pumps.
7. Lightly oil dynamo rear bearing.
8. Grease propellor shaft universal joint and sliding joint, where applicable.
9. Check oil level in the suspension dampers.
10. Renew power steering reservoir filter element.

SCHEDULE "C"

EVERY 20,000 MILES

1. Repeat Schedule "B".
2. Drain and refill automatic gearbox. Clean oil breather in top of dipstick.
3. Renew the felt strainer pad in the base of the chassis lubrication pump.
4. Inspect dynamo brushes for wear.
5. Release - but do not remove the drain plug in the fuel tank to allow any accumulated water to escape.
6. Examine the front propellor shaft universal bearing and if there are signs of external grease leakage repack with 1½ ozs of Mobilgrease No.2. Do not disturb unless leakage is apparent.

MODIFICATION

CATEGORY 2

CARBURETTOR.

The S.A.E. viscosity 20 oils hitherto recommended and used in the guide of the carburettor piston air valve, have caused sticking and sluggishness in the rise and fall of the piston, particularly in cold weather. It is therefore recommended that thinner oils of S.A.E. viscosity 10 now be used for this purpose.

The cap nut at the top of the air valve chamber should be unscrewed, the damper plunger withdrawn and the oil in the guide soaked up by means of absorbent material attached to the end of a piece of stiff wire.

Fill up the guide with an S.A.E. 10 oil and replace the damper plunger and cap nut.

Any of the following proprietary brands of oil are of S.A.E. viscosity 10 or lighter, but any good quality S.A.E. 10 oil is suitable.

Price's..... "Motorine U.C.L".

Wakefield's..... "Wakefield Oilit".

Shell..... "Donax A.1".

Vacuum..... "Mobil Handy Oil".

Essolube..... "Esso shock absorber oil light".

LUVAX-BIJUR FOOT OPERATED CHASSIS OIL PUMP

(INTERNAL OIL LEAKAGE BY GRAVITATION)

FOR INFORMATION:

Cases have arisen where there has been a continual oil leak by gravity feed from the chassis oil pump to the centralised oiling system after the piston of the oil pump has reached the end of its stroke, due to the leather piston valve disc (3 Fig.1), not correctly seating against the raised face of the brass strainer plate (8) when the pump is not in operation. Gravity feed from the pump will allow too much oil to reach the various points fed by the pump, especially the bearings of the stub axles and the centre steering lever, causing an external leakage from the latter two points. (Refer to Service Bulletin No: BB-53 Section Q).

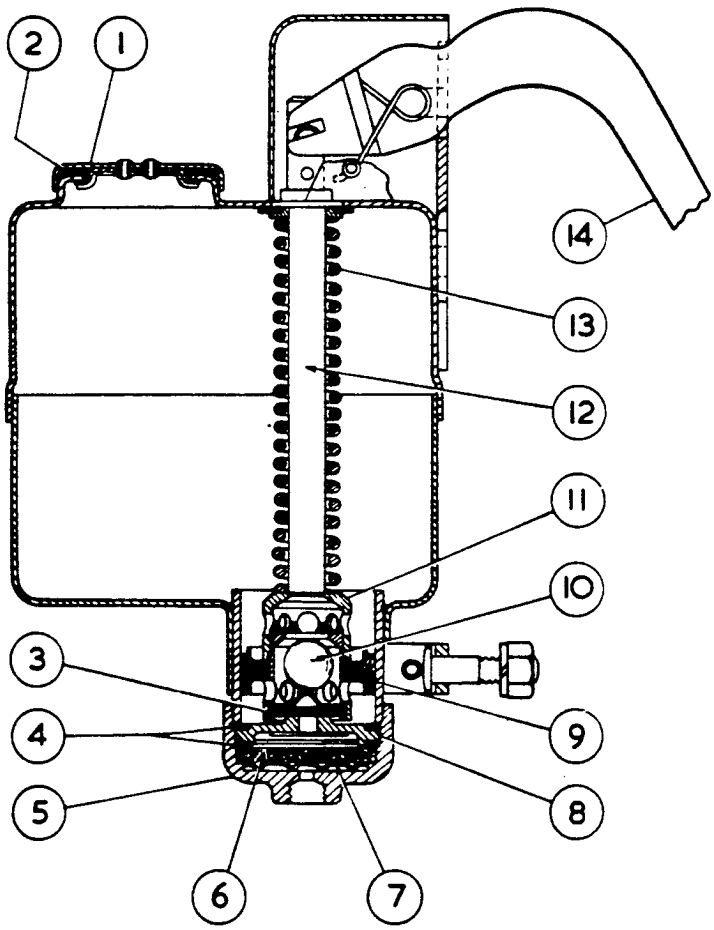

Notation List for Fig.1.

1. Filling Cap.
2. Filling cap joint (washer.
3. Piston valve disc.
4. Strainer plate joint washers (2 Off).
5. Cylinder cap nut.
6. Tank strainer.
7. Tank strainer support
8. Strainer plate.
9. Piston cup.
10. Piston valve ball.
11. Piston rod valve nut.
12. Piston rod.
13. Piston rod spring.
14. Pedal.

Fig.1. Section through Luvax-Bijur chassis oil pump.

1. CAUSE:

(i) The cylinder cap nut (5) insufficiently screwed up thereby preventing the piston valve disc (3) from making contact with the raised face of the strainer plate (8), and also allowing oil to find its way past the two strainer plate joint washers (4).

(ii) Foreign matter on oil sealing face of the piston valve disc and the strainer plate.

(iii) The spun over portion of the piston valve which retains the piston valve disc (3) in position making contact with the face of the strainer plate (8), thus preventing the disc from making contact with the raised portion of the strainer plate.

2. CHECKING FOR OIL LEAKAGE FROM PUMP:

(i) Ascertain that the pump is full of oil.

(ii) With the pedal (14) in the up position, disconnect the two oil feed pipes from the three-way connection at the bottom of the pump.

(iii) Place a piece of paper beneath the three-way connection and note after about half-an-hour, whether any oil has dripped on to the paper. If oil is found to have escaped, then proceed to effect a cure as described in the following paragraph.

3. REMEDY:

(i) Check the cylinder cap nut (5) for tightness. If slack, then fully tighten up and re-check for oil leakage as described in the previous paragraph. After tightening up the nut, it will most probably be necessary to re-align the three-way connection by either fitting a new aluminium joint washer between it and the nut, or adding an additional washer.

(ii) Should screwing up the cap nut not have effected a cure, then remove the nut and examine whether the upper joint washer (4) has been making contact with the lower face of the tank cylinder. Fit two new joint washers if necessary and again re-check for oil leakage. If a leakage still persists, then it will be necessary to remove the pump from the dashboard in order to remove the piston valve assembly for cleaning purposes etc.

(iii) To gain access to the nuts of the three bolts securing the pump to the dashboard, it will first be necessary to lift up the carpet and the insulating material beneath it at the rear of the dashboard sufficiently, so as to allow the removal of the nuts, the bevelled and spring washers. While removing the pump, care should be taken not to lose the three plain washers fitted between the pump and the front of the dashboard.

PRINTED IN ENGLAND

(iv) To remove the piston valve assembly complete with rod and spring, proceed as follows:-

a) Remove the filling cap. Remove the nut and spring washer from the cheese-headed pedal pin and slide the pedal spring cover forwards and remove.

b) Place a piece of cloth over the end of the pedal and the "hairpin" type pedal spring to prevent loss of the latter while removing the pedal pin.

c) Tap out the pedal pin, collect the "hairpin" type spring and slide the pedal off the flats on the piston rod pin and remove the latter from the piston rod (12).

d) Remove the cap nut (5) and then push the piston valve assembly complete with rod and spring downwards to remove. Ascertain that the leather joint washer as fitted to the collar near the top of the piston rod, is in position on the collar, if not, then remove it from the tank and place it on the collar to prevent loss.

(v) Clean out the oil tank, the piston valve assembly and syringe around the piston valve ball (10) to remove all traces of foreign matter.

(vi) If upon examination, there is evidence that the spun over portion of the piston valve has been making contact with the face of the strainer plate (8) denoted by circular markings on the latter, then it will be advisable to re-assemble the parts removed from the pump and fit a replacement one.
NOTE: Reconditioning of an oil pump, which is supplied as a complete unit, is usually not undertaken except by the Manufacturers, and it is customary to fit a complete replacement and return the original one for repair, except in circumstances which render this course impracticable. In the latter case, it will be permissible to attend to the piston valve and strainer plate as follows:-

(vii) Lightly flatten the spun over portion of the piston valve to give clearance between it and the strainer plate, also remove the latter from the cap nut, mount it in a lathe and turn off an amount not exceeding 0.010" (0.25 m/m) from the non-raised face, to ensure an oil tight seating between the raised portion of the strainer plate and the disc (3).

(viii) To re-assemble the parts removed from the pump, proceed as follows:-

a) Oil the piston cup (9). With the leather joint washer in position on the collar near the top of the piston rod (12), fit the piston valve, rod and spring assembly to the tank.

b) Fit the piston rod pin to the top of the piston rod, slide the pedal on to the flats on the pin, pass the pedal pin through the coils of the pedal spring, hook the shorter leg of the spring into the accommodating notch in the pedal and then with the

pedal fully depressed, hook the long leg of the spring under the small projecting pin as shown in Fig.1.

c) Fit the pedal spring cover, making sure that it is pushed fully home against the pedal pin before tightening up the nut of the pin.

d) With the strainer support (7), the strainer (6), the strainer plate (8) and the two joint washers (4), in position in the cap nut (5), fit the nut to the tank and fully screw it up.

(ix) Fill the pump with thin oil or paraffin and test for leakage, and if satisfactory, drain out and refit to car, bearing the following in mind.

Do not omit to replace the three plain distance washers on the pump securing studs prior to offering up the pump to the dashboard. The rubber seal should also be in position against the pedal spring cover. Fill the pump with the recommended grade of oil.

PRINTED IN ENGLAND

GEARBOX LUBRICANTS.

In order to prolong the life of first speed gears, it has been decided to introduce Hypoid oils for the gearbox in place of ordinary mineral oils.

The following are approved, superseding those previously recommended:-

Wakefield's ..... Hypoid 80

Prices EP-80

Shell ..... Spirax EP-80

FOR INFORMATION:

LUBRICANTS

We now recommend that Shell Retinax "A", High Melting Point Grease should be used in place of Shell Retinax "H".

Retailers are therefore advised that this grease should now be used for lubrication of the Front Hubs and the Distributor Lubricator.

The Lubrication Chart, RR/D2b should be altered accordingly until new Charts are available.

MODEL: BENTLEY MARK VI

FOR INFORMATION:

AUTOMATIC GEARBOX

The following information is given for guidance when draining or filling of the gearbox is necessary.

Recommended Fluids;

The Automatic Gearbox should be filled and topped up only with Automatic Transmission Fluid, Type "A", having an Armour Qualification number prefixed by AQ/ATF.

Any of the following may be used:-

Vacuum Oil Co. ...	Mobiloil Fluid 200 ...	Type AQ/ATF.101.
Shell	Donax T.6	Type AQ/ATF.103.
Wakefield's ...	Castrol T.Q. ...	Type AQ/ATF.156.
General Motors ...	Hydra-Matic Fluid	

Capacity ... ... 20 Imp. Pints.

To Drain Gearbox and Fluid Coupling:

It is necessary to remove two drain plugs, one in the gearbox sump and one in the fluid coupling.

(i) Clean the area around the sump drain plug and remove plug.

(ii) Remove the lower bell-housing cover, and if the drain plug on the fluid coupling is not at the lowest point, turn the engine by means of the starter motor to bring plug to this position, and remove the plug.

(iii) After draining, securely replace both plugs.

To Fill a New Gearbox, or, After Complete Draining:

(i) Remove the dipstick, and through the dipstick filling orifice, add 12 Imp. pints (14 U.S. pints) of a recommended gearbox fluid. See Fig.1.

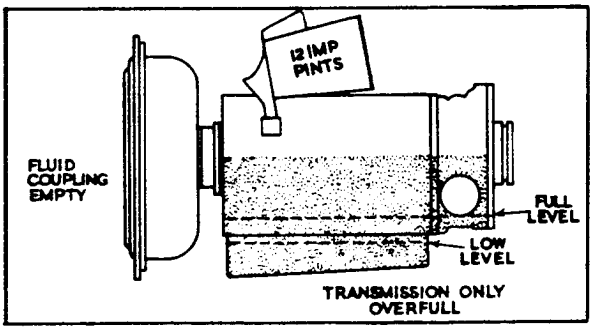

FIG. 1. FIRST FILL-IN.

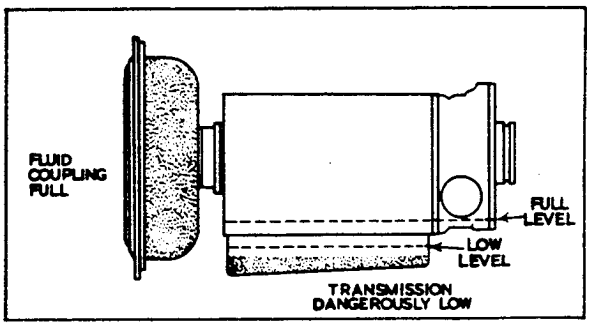

FIG. 2. AFTER FAST-IDLE RUN.

(ii) Check that the control lever is at "N" (Neutral) and that the hand brake is on, and run the engine at a fast idle for approximately 5 minutes. Switch off the engine. See Fig. 2.

(iii) Add a further 6 Imp. pints (7 U.S. pints). Run the engine at a slow idle and check the fluid level with the dipstick. Add further fluid to bring the level up to the "FULL" mark on the dipstick. See Figs. 3 and 4.

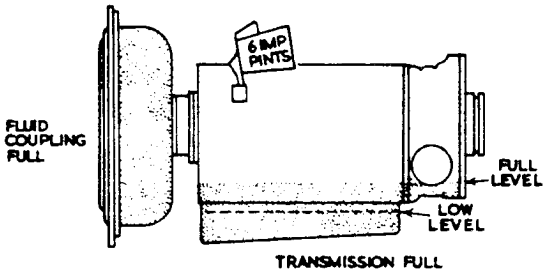

FIG. 3. SECOND FILL-IN.

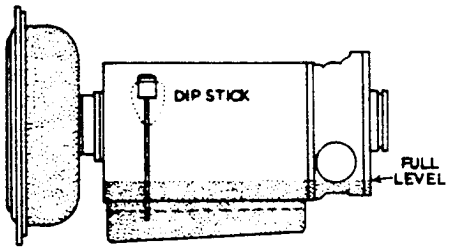

FIG. 4. CHECKING LEVEL.

"LOW" to "FULL" is approximately 2 pints.

NOTE: Do not overfill; if necessary, drain off to obtain correct level.

Always check oil level with engine warm and running at a slow idle, this allows the fluid coupling to fill and so gives an accurate reading. See Fig. 4.

Refilling after Draining Sump only:

(i) Check sump drain plug is securely tightened.

(ii) Add 8 Imp. pints (10 U.S. pints) of a recommended gearbox fluid through the dipstick filling orifice.

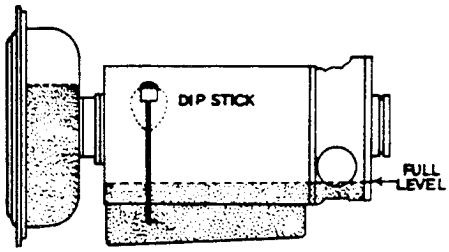

FIG. 5. INCORRECT READING, FLUID COUPLING NOT FILLED BY ENGINE.

(iii) Check that the control lever is at "N" (Neutral) and that the hand brake is on, and run the engine at a fast idle for approximately 3 minutes. Reduce engine speed to a slow idle and check the fluid level with the dipstick. With the engine still running, add further fluid to bring the level up to the "FULL" mark. See "NOTE" above.

Topping-up Gearbox:

(i) Set the control lever in neutral.

(ii) Run the engine for approximately 3 minutes, and check the fluid level while the engine is still running.

(iii) Add fluid as necessary, until the level reaches the mark on the dipstick, taking care not to overfill.

MAINTENANCE DATA CHART

BENTLEY MARK VI, 'R' TYPE & CONTINENTAL SPORTS SALOON.

The accompanying Maintenance Data Chart BM/C1a is intended as a means of easy reference in connection with the periodic maintenance of post-war Bentley cars. It is necessarily abbreviated, and it has therefore been thought advisable to expand the information by means of this explanatory Bulletin.

As continual reference to this Bulletin would detract from the ease and rapidity with which the chart can be used, explanation of the notes on the more commonly used items have been printed on the chart itself.

It will be noted that certain figures differ from those in the Instruction Books and previous technical literature issued by Bentley Motors Ltd., and it should be understood that the information on the chart supersedes any given in previous publications.

EXPLANATION.

NOTE:

F. The poundage is measured by means of a spring balance at 17½" from the axial centre line of the assembly with the radial driving springs removed. The figure quoted will be satisfactory under normal conditions, but a variation of plus or minus 1-lb. is permissible to suit individual engines. Generally speaking, a lower setting is beneficial in dealing with a low speed period on pick-up, while a higher poundage may be better to damp out periods at engine speeds of 2,000 - 3,000 r.p.m.

G. The clearance between the friction liner and the pressure plate is set by means of the inner nut on the servo shaft. Slacken the outer locknut, tighten the inner nut until the pressure plate is just in contact with the liner, then slacken the nut back one third of a turn. This gives .018" clearance between the two surfaces. Secure the locknut.

H. The front end ball joint of the side steering tube and the ball joints of the cross steering tubes are spring loaded and not adjustable. The rear end of the side steering tube is adjusted as follows:-
Screw in the rear end slotted retaining nut until the assembly is choc-a-bloc, slacken the nut back .200 inches and split pin.

M. Relating to INDIA "SPEED SPECIAL" TYRES only. It is of the utmost importance in the interests of safety that the tyre pressures quoted on the chart for these tyres are maintained.

O. The Factory setting for toe-in on new cars is from 3/32" to 3/16"; this allows for the settling down of the various Silentbloc rubber bushes of the front suspension and this setting should be used if the Silentbloc bushes are renewed. Under normal running conditions, the toe-in must be set to within the limits of 1/16" to ⅛".

For Information.

ENGINE OIL.

We now recommend that the engine oil should be changed at periods of 2,500 miles.

This recommendation does not affect the oil changes at Schedules A & B, but Owners should be advised to arrange to have the engine oil changed midway between each Schedule.

FOR INFORMATION

LUBRICANTS: BENTLEY MARK VI CARS

The following Esso Engine Oil has now been officially approved for use in Bentley Mark VI motor cars:-

Esso Extra Motor Oil, 20W/30 grade

Will all Retailers and Service Personnel please make this addition to The Lubricants Chart until such time as the chart is reprinted.

CATEGORY C

AUTOMATIC TRANSMISSION FLUIDS

Automatic transmission fluids made to the Dexron specification are now available. The purpose of this Service Bulletin is to advise Distributors, Retailers and Service personnel that fluids made to the Dexron specification and shown in the following chart are approved for topping-up or refilling the Four Speed Automatic Gearbox fitted to Bentley 'R' type cars.

It is most important however that a new or reconditioned automatic gearbox should initially be filled with a Type A Suffix A fluid shown in the following chart. On completion of the first 12,000 miles (20000 km.), or 12 months of Service life, the automatic gearbox should be drained and then refilled with any fluid shown in the chart.

Type A Suffix A fluids and Dexron fluids are miscible and therefore either can be used for topping-up purposes.

Continued...

APPROVED FLUIDS - Four Speed Automatic Gearbox

	Type A Suffix A Fluids	Dexron Fluids - U.S.A. and Canada only	Dexron Fluids - All countries other than U.S.A. and Canada
B.P.	B.P. Automatic Transmission Fluid	B.P. Autran DX (Dexron)	B.P. Autran DX (Dexron)
CASTROL	Castrol TQ	Castrol TQ Dexron ®	Castrol TQ Dexron ®
ESSO	Esso Automatic Transmission Fluid	Esso Automatic Transmission Fluid (Dexron)	Esso Automatic Transmission Fluid (Dexron)
MOBIL	Mobilfluid 200 AQ/ATF 752 A OR AQ/ATF 2320 A	Mobil ATF 220 Dexron	Mobil ATF 220 (Dexron)
REGENT	-	Regent Texamatic Dexron	Regent Texamatic Dexron
SHELL	Donax T6	Shell Donax T6 (Dexron ®)	Shell Automatic Transmission Fluid (Dexron ®)

Note: Dexron is a registered trade name.

MODIFICATION

ENGINE OIL FILLER CAP WASHER.

Owing to the reported loss of oil filler cap washers in service, it is considered advisable that this washer be permanently fixed in its recess.

This modification is now being incorporated on all cars prior to delivery, but a certain number of cars were delivered before the alteration took place and it is necessary that these cars should receive attention.

The process consists of sticking the rubber washer into the cap using Postik No.772, care being taken that surfaces are clean and free from oil before adhesive is applied.

It is a simple matter to verify whether any particular car has been modified, as a washer which has not been stuck down is easily removable from its cap, and Retailers should take the necessary action when cars come in for servicing.

Will all Retailers kindly inform this Service Depot Concerning cars on which they carry out this alteration.

FOR INFORMATION. CANCELS BB43 dated 4.1.54.

REPLACEMENT OF TAPPETS.

This Bulletin supercedes Bulletin BB43 dated 4.1.54. which should be destroyed.

1. INTRODUCTION.

It has been found that a greater running clearance is desirable with the two window type tappet now being supplied for replacement purposes. This tappet, having two windows less than the earlier type, is more rigid, has a greater bearing surface and is slightly heavier, all factors which may cause the tappet temporarily to stick in the bore when the lubricating oil is cold.

Fitting in accordance with previous instructions may lead to this overtightness which is evidenced by considerable valve gear noise when lightly revving a cold engine. The noise is not unlike that of slack pistons. It will occur only when tappets have recently been replaced in service and should not be confused with tappet noise due to wear after considerable mileage.

Briefly, the new instruction is to fit tappets one size smaller than is found by 'feel fit' as previously recommended. The full procedure is detailed in the following paragraphs.

2. COLOUR CODING OF TAPPETS.

A range of tappets is available allowing selective fitting in steps of .00025" on the diameter as set out below. The tappets are colour coded as indicated and do not bear separate part numbers. Replacement orders should be by colour only. Both inlet and exhaust tappets are coloured similarly.

Tappet Diameter	Colour
1.18675 to 1.1870	Blue
1.1870 to 1.18725	Green
1.18725 to 1.1875	Yellow
1.1875 to 1.18775	Black
1.18775 to 1.1880	Black and Yellow
1.1880 to 1.18825	Green and Yellow

Retailers are advised that a set of six of these latest type tappets should be held for gauging purposes. Any of the earlier four window type now held in stock should be used up on repairs and not held as gauges in order to avoid confusion when re-ordering due to previous colour code changes.

3. TAPPET SELECTION AND FITTING.

Tappets are selectively fitted and should be a close clearance fit in their bores. A master set of six should be used for gauging purposes.

(i) Carefully wipe clean the tappet bore. Select a tappet from the set of gauges that will just slide down the bore without lubricant with the finger pressing lightly on the top.

(ii) Select a new tappet from stock that is one size less than the gauge tappet. Thus if a 'yellow' gauge tappet is found to give the required feel fit a 'green' tappet should be selected for fitting to the bore. Repeat for all the tappet bores.

(iii) Wash and wipe clean the new tappets without removing the 'Parkerising' from the bottom face. This surface, as well as being rustproof, is of value during running in. Etch the appropriate number from 1 to 6 on the top of each tappet to correspond with its bore, inlet or exhaust, commencing from the front of the engine.

(iv) Fit the tappets to the bores smearing the sides and bottom face with Gargoyle grease 234 or Mobilgrease 234. These greases have a high film strength and will assist in obtaining a good bedding surface during running in. They may be obtained in small quantities from the manufacturers.

Whenever the cylinder head is removed for decarbonising the tappets should be checked for pitting on the bottom face. Pitted tappets should be renewed. Serviceable tappets should be replaced in their original bores.

CATEGORY 2

STICKING OF THROTTLE CONTROLS.

This modification is introduced in order to prevent the possibility of complaints of sticking throttle controls, due to seizure of the lower throttle countershaft mounted in the frame. Briefly, the action to be taken consists of increasing the diametrical clearance between the countershaft and its bearings by reaming the bushes to .320" + .002" dia. or in the event of a reamer of this size being unobtainable, by reducing the diameter of the shaft by approximately .004" to .306" dia. by carefully polishing with emery cloth.

On chassis nos. B-297-CD, B-347-CD and all subsequent cars no action is required as the bores of the countershaft bushes are .320" + .002" diameter, giving the required clearance of .008" to .012".

PROCEDURE.

(i) Remove the R.H. front and rear undersheets to gain access to the countershaft.

(ii) Remove the lever from the outermost end of the countershaft, that is, remove the lever from the end of the countershaft which is situated inside the box section of the frame. This operation requires some ingenuity owing to the comparative inaccessibility of this end of the shaft.

(iii) Disconnect the control rod from the lever on the inner end of the countershaft, then, to provide withdrawal clearance for the countershaft, prop the clutch pedal in the disengaged position with the aid of a piece of wood of suitable length, and then remove the countershaft.

(iv) Ream the bushes to .320" + .002" dia. It may be necessary to remove the flywheel lower cover in order to obtain the necessary working clearance to carry out the reaming operation.

If a suitable reamer is not available, the countershaft should be reduced in diameter by approximately .004" to .306" - .002" dia. by carefully polishing with emery cloth. The reduced diameter should be localised to the two areas in contact with the bushes.

Continued

(v) Re-assemble the countershaft to its bracket after cleaning and lubricating the bushes. Check that the shaft possesses end play, the exact amount is not important as long as some is present.

(vi) As a means of identification to show that this modification has been carried out, the letter "R" should be stamped on the chassis frame just beneath the rearmost nut of the countershaft bracket.

Will all Retailers please notify this Service Station of the chassis numbers of cars on which the modification is carried out.

TIGHTENING DOWN THE CYLINDER HEAD.

FOR INFORMATION:

Further to Paragraph 2 of Service Bulletin BB-42, it is not now recommended that a break back or torque loaded spanner should be used since there is a danger of stretching the cylinder head holding down studs at a tension of 280-lbs/ins. on the 5/16" diameter studs. It should be particularly noted therefore that the only reliable and satisfactory method of tightening down the cylinder heads is under the control of a skilled fitter using a box spanner with a fixed length of tommy bar. The recommended tommy bar length is 6", and the nuts should be tightened down evenly working from the centre until by experienced "feel" the nuts are as tight as is wise having regard to the elasticity of the studs.

It may also be noted for information, that until recently 5/16" studs with standard 5/16" nuts were used. In order to improve the tensile properties of the studs, a special heat treatment operation was introduced. It will also be found that later cars have cadmium plated nuts, and as this has the effect of reducing the thread friction, extra care is necessary in tightening down.

Present production cars are now fitted with $\frac{3}{8}$" diameter studs and nuts. These will stand a greater degree of tension in tightening down.

The chief points arising out of these instructions are as follows:-

1. Klingerite gaskets where available, may be used up.
2. Future deliveries of gaskets will be copper asbestos.
3. It is advisable to use a jointing compound along the exhaust side of the C & A gaskets.
4. Care must be taken in tightening down the 5/16" holding down studs. Do not use an excessive length of tommy bar and tighten down uniformly keeping within the elastic limit of the stud.
5. Latest engines have $\frac{3}{8}$" diameter nuts and studs.

FOR INFORMATION:

CORE PLUGS.

Bentley Service Bulletin BB-19 deals with the replacement of engine core plugs on a Category 2 basis, conditional upon partial or complete overhaul.

The following illustration gives fuller details of the location of the core plugs to be replaced, together with replacement part numbers.

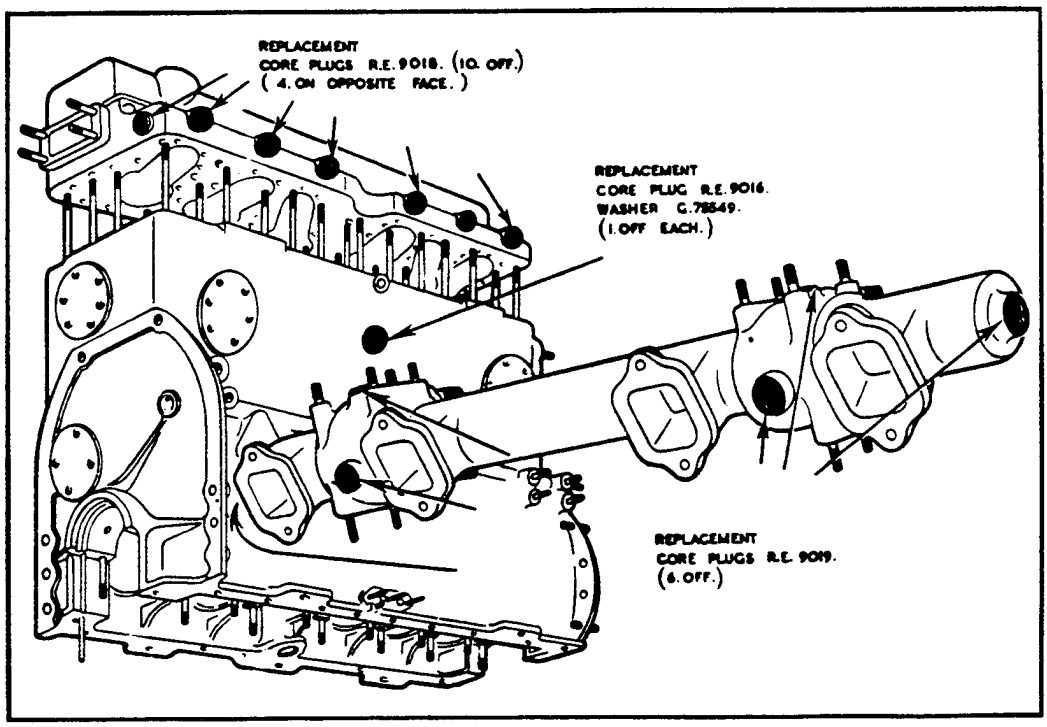

It should also be noted that if a coolant leak develops from any of the core plugs when the engine is fitted with the pre-modified type, this may indicate that a state of corrosion exists in other core plugs caused initially by the engine remaining drained of coolant for lengthy periods of storage or shipment. If a leak is apparent therefore, the instructions given in Bulletin BB-19, limiting this modification to overhaul cases only, must be disregarded, and all core plugs replaced with the modified type.

FOR INFORMATION:

CORE PLUGS - ADDENDUM.

When the modification detailed in Bentley Service Bulletin BB-19 is effected, an aluminium alloy crankcase core plug, additional to those illustrated in Service Bulletin BB-65, must be replaced by the modified type.

This core plug is positioned under the coolant pump mounting adaptor and in order to facilitate replacement, the coolant pump and adaptor must be removed.

The replacement core plug is the type specified for the crankcase side (RE.9016) and must be fitted with an aluminium washer (G.75549.) The amended list of parts necessary to incorporate this modification is as follows:-

RE. 9016	Core Plug	2	Off	(Crankcase)
G. 75549	Washer	2	Off	(Crankcase)
RE. 9018	Core Plug	10	Off	(Cylinder Head)
RE. 9019	Core Plug	6	Off	(Induction Pipe)

FOR INFORMATION:

ENGINE TUNE-UP.

The recommended operations necessary for a tune-up of the engine.

1. SPARKING PLUGS:

Clean the sparking plugs and reset the gaps to .025" (.635 m/m).

2. IGNITION SYSTEM DISTRIBUTOR:

Remove, clean and reset the gaps of the contact breakers of the distributor as follows:-

(i) Remove the rotor arm from the top of the spindle.

(ii) Loosen the small bolt attaching the spring of 'A' Contact breaker, Fig.1, to its anchorage and remove the breaker arm complete with its fibre adjusting washer/s. Remove the locking screw 1, (Fig.1) and remove the contact plate. It is essential that each contact breaker arm, their respective fibre adjusting washer/s and contact plate should be kept together and refitted to the same side of the distributor from which they were removed. Carry out the same procedure for 'B' contact breaker - removing the locking screw 2.

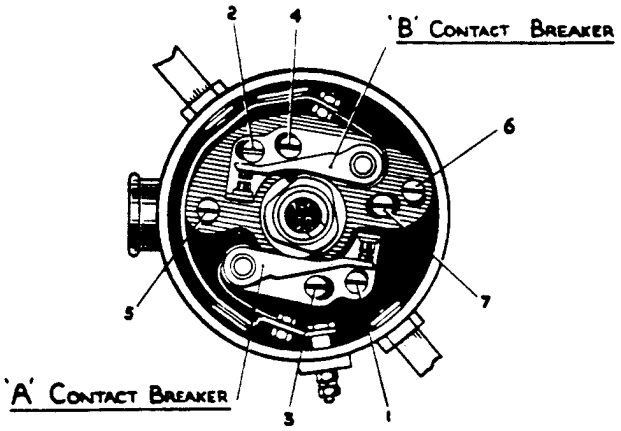

FIG. 1. PLAN VIEW OF DISTRIBUTOR.

(iii) Trim up the points as necessary with a fine carborundum stone until the faces close flush with each other. All raised portions of the contact surfaces should be removed, but it is not necessary to remove the pit marks. If the points are badly pitted, then they should be renewed.

(iv) Refit the contact plates, adjusting washers and breaker arms to their original position. Apply a few drops of engine oil to the felt wick at the top of the distributor spindle and one drop of oil to the rocker arm pivot pins. Smear a trace of Mobiloil Grease No. 2 on the cam surface and refit the rotor.

Note: Should it be found necessary to fit one or two pairs of new contact breakers, care must be taken to ensure that the contact faces of the points close flush with each other. It is usually found that this is obtained by refitting the original fibre adjusting washers, but if this does not suffice, an additional washer R-3975 (thin) or R-3977 (thick) can be fitted or one removed as found necessary.

(v) Turn the engine until the fibre heel of 'A' contact breaker arm is on a lobe of the cam to give maximum opening, loosen the contact plate locking screw, 1, and turn the adjusting screw 3, to obtain the correct gap between the points i.e. .020" (0.508 m/m), and then retighten the locking screw (1). Check that the setting of the gap has not been disturbed by the tightening of the locking screw. Carry out the same procedure for B' contact breaker arm by loosening the locking screw 2, and turning the adjusting screw 4.

3. CLEANING THE CARBURETTORS:

(i) With the ignition switched off, remove the petrol feed pipe from each of the carburettor float chamber covers. Take out and clean the small gauze filter located in each of the covers.

(ii) Remove the float chamber covers, lift out the floats and wipe out the bottom of the float chambers.

(iii) Refit the covers, and replace the small filters with the open end outwards. If necessary, fit four new C & A washers (Part No. EB.4580) to the banjo joints of the petrol feed pipe connections.

(iv) Remove the air valve assembly from each carburettor; first unscrew the knurled cap from the top of each air valve cylinder and carefully remove the plunger (attached to the cap). Next remove the cylinder, then lift out the piston, taking great care not to bend or damage its needle valve or to transfer the pistons. Wipe the piston, cylinder and guide with a piece of clean cloth dipped in petrol. If the piston is found to be "gummy", it is permissible to clean it with metal polish with the exception of the large diameter grooved portion of the piston. On replacement, refill the oil damper reservoir with a viscosity S.A.E.10 oil, any of the following may be used:-

Price's	Motorine U.C.L.
Wakefield's	Wakefield Oilit
Vacuum	Mobil Handy Oil
Shell	Donax A.1.
Essolube	Esso Shock Absorber Light.

4. FUEL STRAINER:

Remove and clean the filter gauzes of the fuel strainer located on the cross-member in front of the main tank. Drain and clean the strainer sump. If necessary, fit a new cork joint washer (Part No. F-89195) to the cover.

5. TO RESET IGNITION TIMING:

After attention to the contact breakers as described in paragraph 4, it is essential that the ignition timing should be re-timed. Proceed as follows:-

(i) Start up the engine and allow it to run for a few minutes and then remove the sparking plugs to relieve the compressions.

(ii) Slacken the nut of the cover of the flywheel marking inspection hole and ease back the cover. The cover is situated on the left-hand side of the clutch casing adjacent to the starter motor.
Note: Owing to the fact that a friction-damped spring drive is used for driving the valve gear and the distributor, and that the starting handle operates to turn the crankshaft through the medium of this spring drive, it is essential that the crankshaft is rotated for timing purposes from the flywheel end as described below. Also the starting handle should not have been used at all since the engine was last running, and should not be used again until the ignition timing has been reset.

(iii) To enable the crankshaft to be turned for timing purposes, jack up the left-hand rear road wheel, engage top gear and release the handbrake.
Note: A method of determining precisely when the contact points break, is to connect one lead of a 12 volt inspection lamp (or a 12 volt buzzer) to the contact breaker terminal on the side of the distributor and the other lead to the distributor body (earth). To view the flywheel marking, a small mirror will be necessary.

(iv) With the distributor cover removed, turn the crankshaft in its normal direction of rotation by means of the rear L.H. wheel until the distributor rotor approaches the No.1. cylinder firing position (approximately 11-o'clock on the distributor), continue to turn slowly until the I.O. (Inlet Opens) marking on the flywheel registers with the pointer. The I.O. marking is $3\frac{1}{2}^{\circ}$ past the IGN/T.D.C. marking.
Note: Normally, with the use of high octane fuels (No.1 spirit) the contact points of the distributor are set to break on the IGN/T.D.C. marking, but owing to the present use of low octane fuels in certain countries, it is now recommended that the contact points are set to break on the I.O. marking of the flywheel, i.e. $3\frac{1}{2}^{\circ}$ later in order to prevent engine detonation.

(v) Connect the leads of a 12 volt inspection lamp (or buzzer) to the distributor as previously described and switch the ignition ON.

(vi) Slacken the screw of the distributor head clamp, and holding the rotor in its fully retarded position (anti-clockwise), rotate the complete distributor body until the points of 'A' contacts just break, i.e. indicated by the lighting of the inspection lamp. Tighten the screw of the distributor head clamp, taking care not to over-tighten to such an extent that the distributor drive bush is distorted.

(vii) Turn the crankshaft through two revolutions and check the break of the points against the I.O. marking on the flywheel. If necessary, re-adjust and re-check.

Having set the timing of No.1 cylinder on 'A' set of contacts, it will now be necessary to check the timing of No.6 cylinder controlled by 'B' contacts.

(viii) Turn the crankshaft so that No.6 piston is approaching T.D.C. and the distributor rotor approaching the firing position for that cylinder (approximately 5-o'clock); continue to turn slowly until the I.O. marking on the flywheel registers with the pointer.

(ix) Slacken the screws 5 and 6 Fig.1, and with the aid of the inspection lamp (or buzzer), adjust the break of 'B' contact points by rotating the adjusting screw . Retighten the screws 5 and 6.

(x) Turn the engine through two revolutions and check the break of 'B' contact points against the I.O. marking on the flywheel. If necessary, re-adjust and re-check and then switch off the ignition. The contact breaker arms will now have been synchronised.

6. INLET VALVE ROCKER CLEARANCE - TO ADJUST:

Before commencing to adjust a rocker clearance, it should be ascertained that that particular tappet is on the base of the cam i.e. not on the cam contour, which is best done by turning the crankshaft by hand until the valve has opened and closed, and then cranking half a revolution beyond this point. The standard clearance for the inlet rockers is .006" (.152 m/m) with the engine cold. If, after this setting, the inlet tappet mechanism should prove to be a little noisy, then the clearances may be set to .006" with the engine hot.

The correct clearance for the exhaust tappets is .012" (.305 m/m) with the engine cold. These should need no attention between decarbonising periods of the engine.

7. ADJUSTMENT OF THE CARBURETTORS: (Mixture Control and Slow Running).

If after carrying out the above mentioned operations, and upon running the engine until it attains its normal running temperature, it is found that the slow running is uneven, it will be necessary to adjust the carburettors as described below:-

NOTE: There are only two adjustments on the S.U. Carburettor i.e. the jet adjusting nut (4 Fig.2) for the mixture, and the idle adjusting screw (3) for the idling speed.

PRINTED IN ENGLAND

The jet adjusting nut is actually a "stop" against which the jet head (5) should bear. Screwing up the nut weakens the mixture and unscrewing it strengthens the mixture.

If the mixture is weak, the exhaust note will be irregular and splashy, whereas, if the mixture is too rich, the exhaust note will have a constant rhythmical uneven beat, known as "hunting".

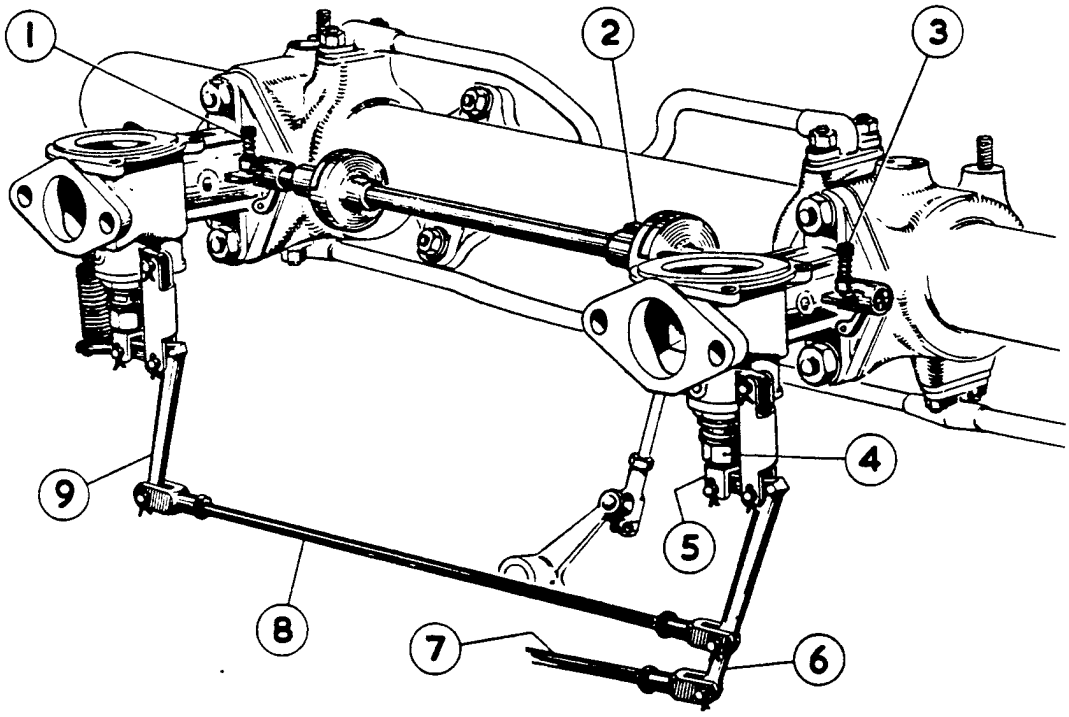

FIG. 2. VIEW OF CARBURETTOR CONTROLS (CARBURETTORS PARTLY DISMANTLED FOR CLARITY).

TO ADJUST:

(i) Disconnect the bottom control rod (7) from the mixture lever (6) of the front carburettor by removing the pin.

(ii) Disconnect the control rod (8) from the mixture lever (9) of the rear carburettor by removing the pin.

(iii) While pushing the lower end of the mixture lever (6) towards the rear of the engine, so as to keep the back of the jaw of the jet head (5) against the jet adjusting nut (4). Turn the latter three or four flats in either direction to determine which position gives the most even slow running. Repeat for the rear carburettor. The degree of movement of the engine on its flexible mountings and the rotation of the fan give a useful indication of the evenness of firing.

(iv) With the mixture control lever on the steering wheel in the position marked "Run", push the lower end of the mixture lever (6) of the front carburettor towards the rear of the engine and while lightly pulling the bottom control rod (7) towards the mixture lever offer up the jaw of the rod to the lever and check whether the pin holes are in line with each other, if not, adjust the jaw on the rod until they line up. Fit the control pin and secure with a new split pin.

(v) Again push the mixture lever (6) towards the rear, and offer up the jaw of the control rod (8) to the mixture lever (9) of the rear carburettor, line up pin holes as found necessary. Fit the control pin and secure with a new split pin.

(vi) With the hand throttle lever on the steering wheel placed at the bottom of its range, adjust, if found necessary, the throttle stop adjusting screw (3) of the front carburettor until the correct idling speed has been obtained.

8. SYNCHRONISING THE THROTTLES:

If after the adjustment of the carburettors as described above, it is still found that the slow running is uneven, then proceed to synchronise the throttles as follows:-

1. Unscrew the oiler caps and remove the hydraulic dampers from both carburettors.

2. Thoroughly warm up the engine and adjust the front carburettor throttle stop screw to give a fast idle (about 500-600 R.P.M.) sufficient to lift the suction pistons slightly.

3. With a pencil, depress the piston of the front carburettor and listen to the air noise or "hiss".

4. Repeat the operation with the rear carburettor.

5. If the hiss is not the same for both carburettors, slacken the pinch bolt (2) of the inter-throttle linkage and adjust the throttle stop screw of the carburettor which does not produce the correct amount of hiss, until both carburettors sound the same.

6. When synchronised, clamp up the pinch bolt (2).

7. Unscrew the rear throttle stop screw until it no longer makes contact with the stop.

8. Using the throttle stop screw of the front carburettor only, adjust the slow running to give a tick-over of approximately 500 RPM

9. Make a final check of the synchronisation.

10. Replace the oiler caps and hydraulic dampers.

CANCELS BB-91 dated 12.6.52.
and BB-161 dated 22.12.52.

FOR INFORMATION

VALVE TIMING

This Bulletin sets out the latest instructions for valve timing and cancels Bulletins BB-91 of 12.6.52 and BB-161 of 22.12.52, which should be destroyed.

Basically, owing to the possibility of camshafts and flywheels having been replaced in service, valve timing should be carried out in accordance with the camshaft fitted and not necessarily in accordance with the markings on the flywheel fitted.

1. CAMSHAFTS.

The following camshafts have been fitted to the Bentley Mark VI engine on production.

Chassis Nos: B-2AK to B-501-CD	Camshaft RE.5157.
Chassis Nos: B-2-DA and onwards	Camshaft RE.6885.

Camshaft RE.6885 is the shaft available as a replacement and, where fitted to replace camshaft RE.5157, the letter 'C' should be stamped on the top left-hand side wall of the aluminium wheelcase (timing case) for recognition purposes. Wheelcases of engines reconditioned by the London Service Station are already being stamped in this way where the later shaft has been substituted.

It will be appreciated that, as the camshaft part number is engraved on the end of the shaft near the flywheel, an external mark is essential for recognition where the original shaft has been replaced, so that valve timing may be checked without unnecessary stripping.

Where the camshaft has not been replaced, it may be recognised from the Chassis Number.

It is advised for information that a third camshaft RE.19517 will shortly be introduced on production but this shaft differs from RE.6885 only in the method of retaining the camshaft gear. Eight setscrews are used in place of four studs.

2. FLYWHEEL MARKINGS.

Early type flywheels are marked as shown in Fig. 1 and 2. Later type flywheels and replacement flywheels, will be marked as shown in Fig. 3. It will be noted that the T.D.C. mark only is shown with additional markings at five degree intervals from 5° to 20° on either side of the T.D.C. mark designated EARLY and LATE.

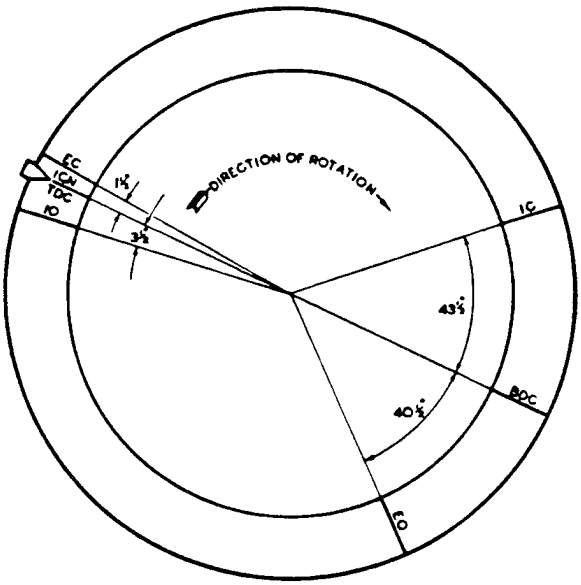

FIG.1 OLD TIMING MARKINGS ON FLYWHEEL, LEFT-HAND DRIVE CARS.

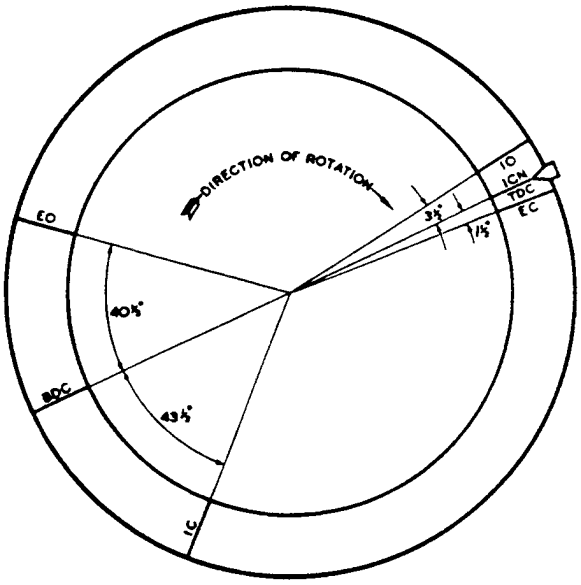

FIG.2 OLD TIMING MARKINGS ON FLYWHEEL, RIGHT-HAND DRIVE CARS.

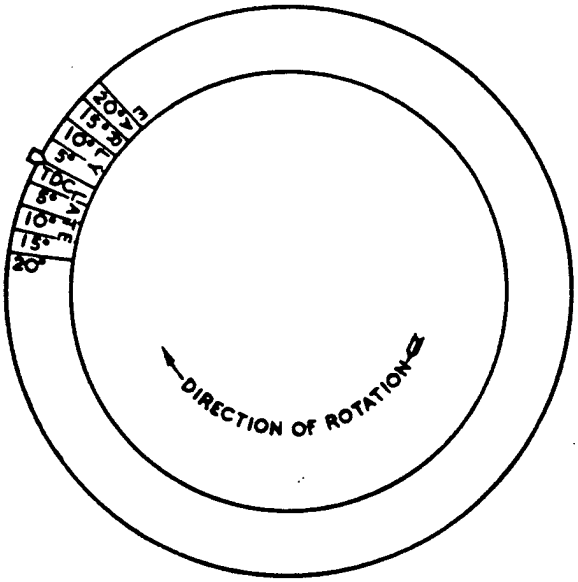

FIG.3 NEW TIMING MARKINGS ON FLYWHEEL, LEFT-HAND DRIVE CARS.

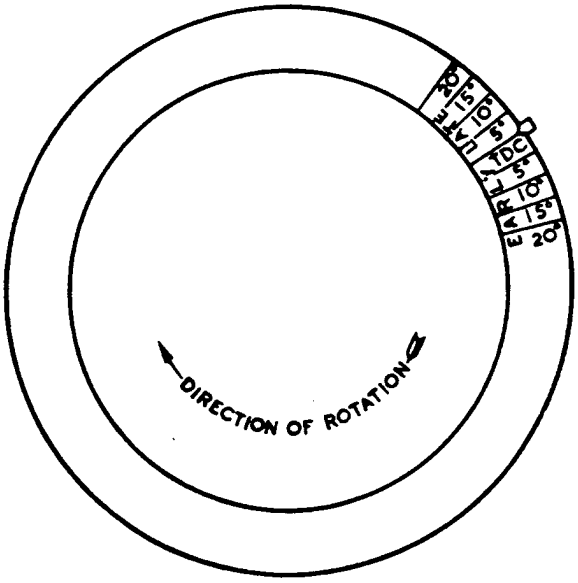

FIG.4 NEW TIMING MARKINGS ON FLYWHEEL, RIGHT-HAND DRIVE CARS.

3. VALVE TIMING DATA

(i) Engines fitted with Camshaft RE.5157.

	Timing Mark	
	Old Flywheel Markings	New Flywheel Markings
Inlet opens $3\frac{1}{2}^{\circ}$ A.T.D.C. with .030" valve clearance	I.O.	$3\frac{1}{2}^{\circ}$ LATE ($\frac{1}{8}$" on flywheel represents 1°)

(ii) Engines fitted with Camshaft RE.6885 or RE.19517

	Timing Mark	
	Old Flywheel Markings	New Flywheel Markings
Inlet opens at T.D.C. with .030" valve clearance	IGN/T.D.C.	T.D.C.

The timing with camshaft RE.6885 has been altered to inlet opens at T.D.C. to give increased torque and engines should be timed to the new setting whenever retiming is necessary.

4. PROCEDURE FOR VALVE TIMING

A flywheel marking inspection hole and pointer is provided on the right-hand side of the clutch casing when viewed from the front. It has a small cover secured by a setscrew. On left-hand drive vehicles, the inspection hole is on the left-hand side of the clutch casing.

Special Tools Required:

1617/T1003	Extractor (or 3759/T1016 Extractor
3759/T1007	Serrated Box Spanner

A. WITH CAMSHAFT DAMPER AND CAMSHAFT GEAR REMOVED

NOTE: The four camshaft gear fixing studs should not be fitted to the camshaft until after timing has been completed, as they do not allow sufficient clearance for the camshaft gear to be removed after the crankshaft damper has been fitted. Two hexagon headed set screws ($\frac{1}{4}$" B.S.F. -26 T.P.I.), Part No. KC-904/Z, are temporarily required as substitutes. Four of these setscrews were used to fix the early fabric type camshaft gear.

(i) Screw the two setscrews into the hub of the camshaft and rotate the shaft with a lever in its running direction until the inlet valve of No.6 cylinder commences to open. No.1 piston will then be on its firing stroke. Set and lock the inlet valve clearance on No.1 cylinder to exactly .030" clearance (.762 mm).

(ii) Again turn the camshaft in its running direction until the inlet valve of No.1 cylinder just commences to open, as ascertained by the 'nip' on the push rod which should be just turnable.

With the camshaft set in position, the procedure differs according to the type of crankshaft damper fitted. The early or 'Pre-Bench' type, was fitted from Chassis Nos. B-2-AK to B-126-DA inclusive and the later 'Bench' type from Chassis No. B-128-DA and onwards. The two dampers may be distinguished by the fact that the 'Pre-Bench' type has twelve studs (D, Fig.5) fitted to the rim of the rear damper wheel, whereas the 'Bench' type has six bolts (E, Fig.6).

With the 'Pre-Bench' Type Damper.

(iii) Remove the bottom cover from the clutch casing and turn the crankshaft from the flywheel until the appropriate timing mark on the flywheel lines up with the timing pointer.

(iv) With the thrust plunger and spring in position, fit the camshaft gear to the camshaft. Fit the locking plate and secure with the two temporary setscrews.

(v) Offer up the rear half of the damper, assembled as shown in Fig.5, to the crankshaft nose, and align the three key-ways in the bore of the damper hub with the keys in the crankshaft nose.

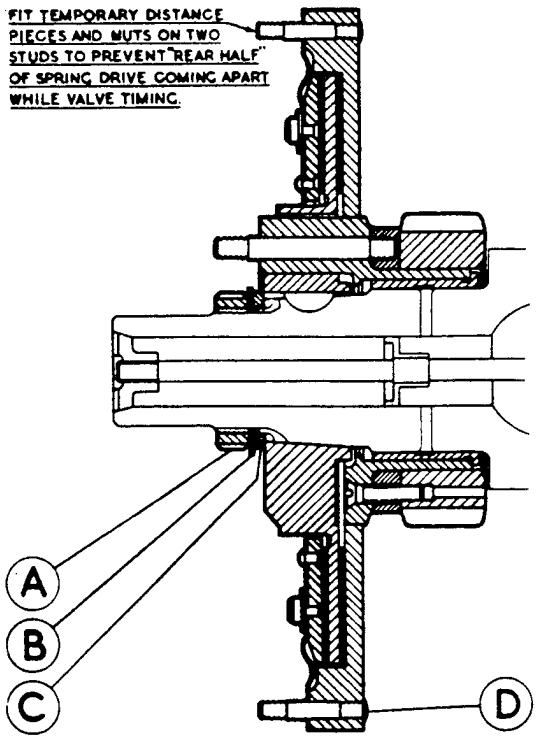

FIG.5 SECTION - 'REAR HALF' OF 'PRE-BENCH' TYPE CRANKSHAFT DAMPER (SPRING TYPE)

Note the tooth on the camshaft gear which most nearly mates with the crankshaft pinion and turn the damper and pinion in a CLOCKWISE direction, two teeth relative to the camshaft gear. Turn the crankshaft in its running direction just sufficiently to re-align the keys and key-ways and press the damper forward on to the crankshaft nose, engaging both keys and gears. To ease the full engagement of the gears. Rock the crankshaft at the flywheel end whilst urging the damper fully home.

(vi) Fit the plain washer (C, Fig.5), a new locking washer 'B' and the serrated retaining nut 'A'. Tighten the nut with tool 3759/T1007 but do not lock.

(vii) Check that No.1. inlet valve commences to open on the appropriate flywheel marking.

(viii) If the timing is incorrect, the location of the camshaft gear on the camshaft must be changed and eight holes are provided in the camshaft gear for this purpose. Turning the gear through 45° to the next stud hole will alter the setting by a quarter of a tooth, equivalent to 7/16" (11 mm) on the flywheel periphery; turning the gear through 90° will alter the setting by half a tooth, equivalent to ⅞" (22 mm) on the flywheel periphery.

First loosen the serrated nut 'A' (Fig.5) and with extractor 3759/T1016 or tool 1617/T1003, withdraw the damper about 5/16" from its fully home position on the crankshaft nose. Remove the camshaft gear and reposition it as required, ensuring that the circular locking plate is refitted.

(ix) When the correct timing has been obtained, fit two of the four camshaft gear fixing studs, new lockwashers and nuts. Fully tighten and lock the nuts. Remove the two temporary setscrews and similarly fit the other two studs. Tighten and lock the serrated damper retaining nut (A Fig.5).

(x) Reset No.1 inlet valve clearance to .006" (.15 mm).

(xi) Fit the front damper wheel complete with the eight damper springs (and adjusting washers if fitted behind the springs), ensuring that the co-relation marks 'O' on both damper wheels are in alignment. Tighten the four hub nuts and lastly the twelve rim nuts, locking with new lockwashers.

(xii) Align and refit the wheelcase and remaining components.

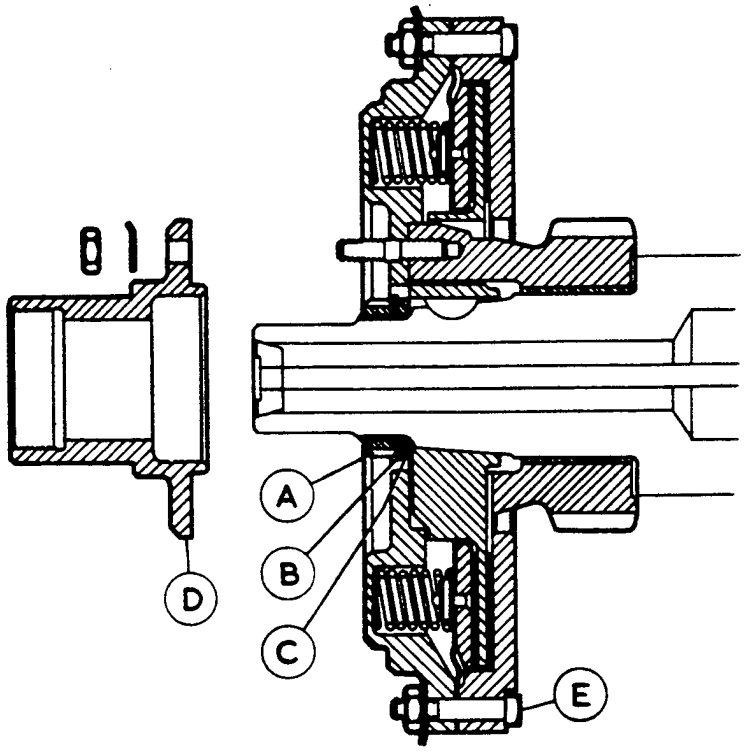

FIG.6 SECTION 'BENCH' TYPE CRANKSHAFT DAMPER
(SPRING DRIVE)

With the 'Bench' Type Crankshaft Damper.

(xiii) Set the inlet valve clearance of No.1 cylinder to .030" and set the position of the camshaft as in sub-paras. (i) and (ii).

(xiv) Fit the damper, assembled less the flanged hub D as shown in Fig.6, to the crankshaft nose. Fit the plain washer 'C', a new lockwasher 'B' and the serrated nut 'A'. Tighten the nut with tool 3759/T1007 but do not lock.

(xv) Turn the crankshaft by the serrated spanner, or the flywheel, until the appropriate timing mark registers with the timing pointer.

(xvi) With the thrust plunger and spring in position, place the camshaft gear on the camshaft hub, carefully engaging the teeth with those of the crankshaft pinion. Gently push the gear home on the camshaft. Check the alignment of the stud holes in the camshaft with the correcponding holes in the gear. If they line up, fit the locking plate and two temporary setscrews. If they do not, re-mesh the camshaft gear (without moving the camshaft or crankshaft) until they do.

(xvii) Check the timing, if necessary repositioning the camshaft gear; fit the camshaft gear fixing studs and re-set the valve clearance as in sub-paras. (vii), (viii), (ix) and (x) above. It is not necessary to withdraw the 'Bench type damper 5/16" to remove the camshaft gear.

(xviii) Refit the flanged hub 'D', Fig.6 to the damper, ensuring that the co-relation marks 'O' on the front damper wheel and the hub are in alignment.

First tighten and lock the six rim nuts of the damper wheels and then tighten and lock the four hub nuts.

(xix) Align and refit the wheelcase and remaining components.

B. WITH THE CRANKSHAFT DAMPER ONLY REMOVED.

If the crankshaft damper only has been removed, the procedure for timing is the same for both dampers.

(i) With No.1 piston on its firing stroke, set the No.1 inlet valve clearance to exactly .030" (.762 mm) and turn the camshaft until No.1 inlet valve just commences to open as ascertained by the 'nip' on the push-rod which should be just turnable.

(ii) Turn the crankshaft from the flywheel until the appropriate timing mark on the flywheel lines up with the timing pointer.

(iii) Offer up the rear half of the 'Pre-Bench' type damper assembled as in Fig.5, or the 'Bench' type damper less the flanged hub as in Fig.6, to the crankshaft nose, and align the three keyways in the bore of the damper hub with the keys in the crankshaft nose. Note the tooth on the camshaft gear which most nearly mates with the crankshaft pinion, and turn the damper and pinion in a CLOCKWISE direction two teeth relative to the camshaft gear. Turn the crankshaft in its running direction just sufficiently to re-align the keys and keyways and press the damper forward on to the crankshaft nose, engaging both keys and gears. To ease full engagement of the gears, rock the crankshaft at the flywheel end whilst urging the damper fully home.

(iv) Fit and tighten the serrated damper retaining nut with its plain and lock washers, and check the timing of No.1 inlet valve commencing to open against the appropriate flywheel marking.

(v) If incorrect, remove the damper with the extractor and re-mesh the gears until correct timing has been obtained.

(vi) Lock the serrated retaining nut, re-assemble the damper and align and refit the wheelcase.

(vii) Reset the clearance of No.1 inlet valve to .006" (.15 mm).

FOR INFORMATION:

CYLINDERS

REBORING & FITTING LINERS.

This Bulletin supersedes Bulletin No.BB-92 (Section E) reference SB/GF.29.3.50, and also cancels BB-137 (Section E) reference SB/LT.1/SF.22.11.51. The contents of this Bulletin cover the following:-

a) Standard oversize cylinder bore diameters and corresponding replacement pistons (Para.1).

b) Fitting a set of short liners ('E' Fig.2) to a 3.500" dia. bore engine on which the upper portion of the bores were previously "Flash Chromed" (Para.2).

c) Boring a cylinder block to a standard oversize diameter on which short liners were originally incorporated (Para.3).

d) Fitting twin cylinder bore liners to a 3.500" dia. bore engine when one or more of the bores are deeply scored (Para.4).

e) Fitting twin cylinder bore liners to a 3.625" dia. bore engine when one or more of the bores are deeply scored (Para.5).

Originally, the cylinders of the 3.500" dia. bore engine were "Flash Chromed" to a thickness of .00075" = .02 m/m(.0015" on bore dia.) for a distance of 2.250" (57.15 m/m) from the top of the bores. "Flash Chroming" commenced at Chassis No.B-2-AK up to Chassis No.B-142-DA, although certain engines in this range of cars have since been fitted with short "Bricrome" liners. Commencing at Chassis No.B-144-DA and onwards, short "Bricrome" liners are fitted.

The following items, 'a', 'b', 'c', 'd' and 'e' should be noted prior to reboring and finally honing the cylinders and 'f' after these operations have been carried out.

a) The recommended grades for the honing stones, together with the spindle speed are as follows:-

(i)	Rough	Carborundum	C-180	- N - VGN or equivalent.
(ii)	Fine	Carborundum	C-320	- N - VGN or equivalent.
(iii)	Spindle speed. 180 R.P.M.			

The recommended lubricant when honing, is Vaclar Cutting Oil.

b) A Tungsten Carbide tipped cutter should be used for boring; operating at about 250 R.P.M., no lubricant is required. The radius on the tip of the cutter should not be less than .020" (.5 m/m) and not exceed .025" (.63 m/m).

PRINTED IN ENGLAND

c) Depending upon the type of equipment available, it may be necessary to remove the cylinder head holding down studs, in which case, they must be refitted prior to the final honing operation, because small local "high spots" occur in the upper end of the cylinder bores when tightening down the studs, which disappear during final honing. The studs vary in length, therefore due note should be taken before removing them of the position which they occupy on the crankcase upper face.

d) The coolant pump support bracket (secured by five nuts) must be left bolted to the cylinder block.

e) The camshaft must be removed and the crankcase cleaned to prevent adhesion of swarf and dust.

f) Prior to refitting the camshaft, it is of the UTMOST IMPORTANCE that the crankcase should be thoroughly washed and cleaned and the various oilways, drilled oil passages and the oil gallery blown out with paraffin and air under pressure. It will be necessary to remove the two core plugs from the front and rear end of the oil gallery, (situated on the front and rear end face of the crankcase). The oil gallery on R.H. side of engine is integral with the crankcase; running from end to end.

1. STANDARD OVERSIZE CYLINDER BORE DIAMETERS & CORRESPONDING REPLACEMENT PISTONS:

The tables 'a' and 'b' below, show the cylinder bore oversizes for the 3.500" dia. small bore engine and the 3.625" dia. large bore engine together with the available corresponding oversize pistons.

For Chassis Series 'A' to 'L' (B-2-AK to B-401-LH).

a) Cylinder bore diameter (finished sizes after final honing). Piston oversize

3.5005"	(89.04 m/m)	.005"	(.13 m/m)
3.5105"	(89.17 m/m)	.010"	(.25 m/m)
3.5155"	(89.29 m/m)	.015"	(.38 m/m)
3.5255"	(89.55 m/m)	.025"	(.63 m/m)
3.5355"	(89.80 m/m)	.035"	(.89 m/m)

NOTE: It is permissible to be +.001" (.025 m/m) on the bore size but NO MINUS LIMIT IS ALLOWED.

For 'M' Series Chassis and onwards (commencing at B-2-LD).

b) Cylinder bore diameter (finished sizes after final honing). Piston oversize.

3.6305"	(92.21 m/m)	.005"	(.13 m/m)
3.6355"	(92.34 m/m)	.010"	(.25 m/m)
3.6405"	(92.47 m/m)	.015"	(.38 m/m)
3.6505"	(92.72 m/m)	.025"	(.63 m/m)
3.6605"	(92.97 m/m)	.035"	(.89 m/m)

NOTE: It is permissible to be + .001" (.025 m/m) on the bore size but NO MINUS LIMIT IS ALLOWED.

2. TO FIT A SET OF SHORT "BRICROME" LINERS TO A 3.500" DIA.BORE ENGINE ON WHICH THE UPPER PORTION OF THE BORES WERE PREVIOUSLY "FLASH CHROMED":

Note: Should one or more of the cylinder bores be found to be deeply scored, then consideration should be given to fitting twin liners.(See Para.4).

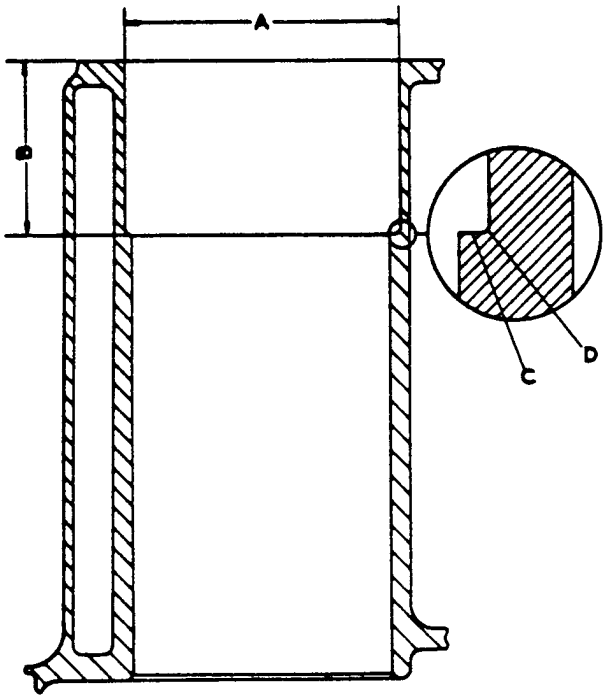

FIG.1. SECTION - CYLINDER-SHOWING COUNTERBORE.

(i) To assist in obtaining the required interference of .0025" to .0035" (.06 to .09 m/m)between the liner and the cylinder counterbore, 'A' Fig.1, the liner RE-6017, is colour coded(graded)in the bore as follows:-

a) Those marked with blue paint, have an external diameter of 3.628" to 3.6285" (92.15 to 92.16 m/m).

b) Those marked with yellow paint, have an external diameter of 3.6285" to 3.629" (92.16 to 92.17 m/m).

(ii) Set up the crankcase on a boring machine,taking care that the cylinder bore is CONCENTRIC with the boring cutter, at a position about 2.500" (63.5 m/m) down the cylinder bore. Next, adjust the boring cutter so that the first cut is heavy enough to get underneath the original chromium plating and counterbore the cylinder to a depth of 2.245" to 2.250" (57.02 to 57.15 m/m). See 'B' Fig.1.

(iii) Re-adjust the cutter and continue the counterboring to a depth as above and to a diameter that will allow a liner to have an interference fit of .0025" to .0035". The number of secondary cuts will of course, depend upon the depth of the initial cut, but it is recommended that these are kept to a minimum.

The bottom face, 'C' Fig.1, of the counterbore must be machined perfectly true. Any slight discrepancy on this end will cause a gap on one part of the "butt" joint.

(iv) Repeat for the remaining bores.

(v) Before pressing in the liners, ensure that the radius, 'D' Fig.1, is smaller than the chamfer ('F' Fig.2) on the lower end of the liners, so that there will be no interference at the butt joints when the liners are pressed fully home.

NOTE: If, when measuring the diameter of a counterbore ('A'Fig.1), it exceeds 3.6265"(92.11 m/m), it will be necessary to fit an R-4610 oversize short liner. This liner is marked with white paint and has an external diameter of 3.631" to 3.632" (92.23 to 92.25 m/m), and one should be selected that will not allow an interference exceeding .004" (.1 m/m), or less than .0025" (.06 m/m).

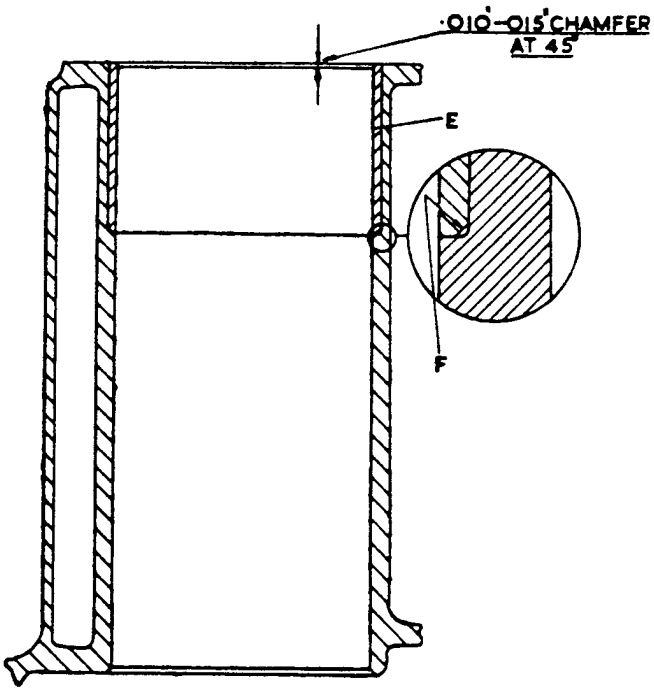

FIG.2. SECTION - CYLINDER - SHORT LINER IN POSITION.

(vi) Press each selected liner into its appropriate cylinder by means of a hydraulic press. The load required will be 2 to 2½ tons.(2,032 to 2,540 Kgs.) The liners should be pressed in dry.

(vii) Face off the upper ends of the liners flush with the top surface of the cylinder block.

(viii) Bore straight through the liners and the original cylinder bores in stages, to the nearest standard oversize diameter to which the lower portion of the cylinders will clean up to: LEAVING .003" (.08 m/m) FOR FINAL HONING. The hardness figure of the liners is V.P.N. 320 to 370.

(ix) With a half-round scraper, cut a .010" to .015" (.25 to .38 m/m) chamfer at about 45° at the upper end of each liner, as shown in Fig.2.

(x) If removed, replace the cylinder head holding down studs.

(xi) Next, hone the bores to the required standard oversize diameter. (See table 'a' of Para.1). Due to the difference in textures of the liners and the cast iron cylinders, special care should be taken when honing to guard against the possibility of scoring.

3. TO BORE A CYLINDER BLOCK TO A STANDARD OVERSIZE DIAMETER ON WHICH SHORT LINERS WERE ORIGINALLY INCORPORATED(CHASSIS NO.B-144-DA AND ONWARDS):

The following also applies to any chassis prior to Chassis No.B-144-DA on which short liners have been fitted during the course of repairs as described in Para.2.

(i) Set up the crankcase on a boring machine, taking care that the cylinder bore is CONCENTRIC with the boring cutter at a position about .187" = 4.7 m/m (unworn portion of bore) down the cylinder and machine straight through the liners and the cylinder bores in stages to the nearest standard oversize diameter to which the cylinders will clean up to; LEAVING .003" (.08 m/m) FOR FINAL HONING. For standard oversize diameters, refer to table 'a' or 'b' of Para.1.

NOTE: Honing instead of boring may be carried out for the removal of metal up to .010" (.25 m/m) on diameter, but beyond this point, it will be preferable to bore and then finally hone.

(ii) With a half-round scraper, cut a .010" to .015" (.25 to .38 m/m) chamfer at about 45° at the upper end of each liner as shown in Fig.2.

(iii) If removed, replace the cylinder head holding down studs.

(iv) Next hone the bores to the required standard oversize diameter.

4. TO FIT TWIN CYLINDER BORE LINERS TO A 3.500" DIA. BORE ENGINE:

General: The following scheme consists of fitting twin liners when one or more of the bores are deeply scored. A long cast iron liner RE-9922 is fitted to the lower portion of the bore and a short "Bricrome" liner (RE-9921) to the upper portion, after which, the cylinder/s can be rebored to the same diameter as the remaining bores and a new piston/s fitted. This scheme may also be used, if after boring a cylinder block to the maximum standard oversize diameter of 3.5355" to 3.5365" (89.8 to 89.82 m/m), one or more of the bores have not cleaned up. Twin liners should then be fitted to all the cylinders; and they should be bored and finally honed to the standard diameter of 3.5005" to 3.5015" (88.91 to 88.93 m/m). This scheme is applicable to Chassis No.B-2-AK and up to Chassis No.B-401-LH.

If short liners ('E' Fig.2) have not been incorporated (on chassis prior to B-144-DA), it will be necessary to counterbore the unaffected (unscored) cylinders at their upper end and fit a short Bricrome liner, RE-6017; irrespective to fitting twin liners to one or more of the bores.

If short liners are already incorporated, the liner must be removed before fitting twin liners. To determine if short liners have been fitted to an engine, note top of cylinder bores; there is a difference in colour and grain between the steel liner and the cast iron block.

Machining & Fitting Procedure:-

Where short liners have not been incorporated, proceed as follows for bores which do not require twin liners:-

(i) Refer to sub-para.(i) of Para.2 concerning the external diameter and interference fit of the short liners, RE-6017.

(ii) Carry out the operations as described in sub-paras.(ii) to (viii) inclusive, of Para.2.

(iii) If short liners are already incorporated, proceed as follows to remove a liner from a scored bore:-

a) Set up the crankcase on a boring machine, taking care that the cylinder bore is CONCENTRIC with the boring cutter at a position about .187" = 4.7 m/m (unworn portion of bore) down the cylinder.

b) Bore out the short liner in stages, until it has a wall thickness of not more than .015" (.38 m/m). This operation must be carefully carried out in order that the boring cutter does not contact the cylinder counterbore. As a guide when boring, it should be borne in mind that the external diameter of the liner (in position) is 3.625" (92.07 m/m) i.e. the same diameter as the counterbore 'A' Fig.1. From the upper face of the cylinder block, the liner should be bored to a depth of 2.250" to 2.255" (57.15 to 57.27 m/m).

c) With a sharp suitable hand tool, carefully break away the upper end of the liner from the cylinder wall and remove the remaining portion.

(iv) To assist in obtaining the required intereference of .0025" to .0035" (.06 to .09 m/m) between the cylinder and the liners, the short and long liners (RE-9921 and RE-9922) are colour coded (graded) in their bores as follows:-

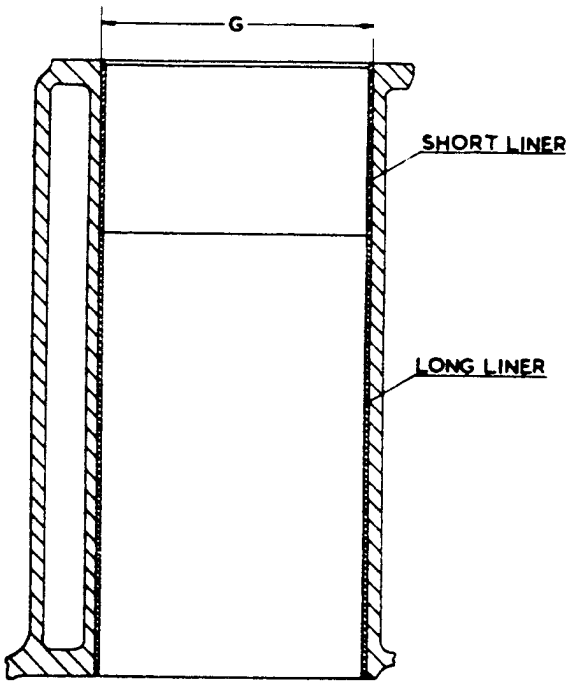

FIG.3. SECTION - CYLINDER - TWIN LINERS IN POSITION (3 500" DIA. BORE ENGINE).

a) Those marked with blue paint have an external diameter of 3.638" to 3.6385" (92.40 to 92.42m/m)

b) Those marked with yellow paint have an external diameter of 3.6385" to 3.639" (92.42 to 92.43m/m)

(v) Apart from the liner dimensions given above, the long liners should be measured at six different diametrical points; take the mean of these measurements for the external diameter. Select a suitable short liner to match with the obtained measurement. It is not necessary to similarly measure a short liner; refer to the colour coding.

(vi) Again set up the crankcase on the boring machine with the upper end of the 3.625" (92.07 m/m) dia. counterbore CONCENTRIC with the boring cutter and bore out the cylinder in stages, the whole of its length, (See G Fig.3), to a diameter that will allow the correct interference fit between the cylinder and the pair of matched liners. The finish of the bore must be a MACHINED AND NOT A HONED FINISH, prior to pressing in the liners.

(vii) Lightly smear the selected long liner with engine oil and with the chamfered end facing downwards, press in the liner by means of a hydraulic press, until the upper face is flush with the top surface of the cylinder block. The load required is from 2 to 3 tons (2,032 to 3,054 Kgs).

(viii) With the chamfered end of the short liner also facing downwards, place it on top of the long liner and press both into position. Do not oil the short liner. The liners should be pressed in until the upper face of the short liner stands .010" to .015" (.25 to .38 m/m) proud of the top surface of the cylinder block.

(ix) Face off the upper end of the liner/s flush with the top surface of the cylinder block.

(x) Bore straight through the liners in stages, to the required diameter LEAVING .003" (.08 m/m) FOR FINAL HONING.

NOTE: If the cylinders were originally fitted with short liners and the remaining unaffected (un-scored) bores are for example of standard size, i.e. 3.5005" to 3.5015" (88.91 to 88.93 m/m), then the cylinder/s to which twin liners have been fitted should be bored and honed accordingly. If the unaffected bores are already to a standard oversize diameter, then the re-conditioned cylinder/s should be bored and honed to match, this also applies if short liners have been incorporated during the course of these repairs. For standard oversize cylinder bore diameters, refer to table 'a' of Para.1.

(ix) With a half round scraper, cut a .010" to .015" (.25 to .38 m/m) chamfer at about 45° at the upper end of the liner/s as shown in Fig.2.

(xii) If removed, replace the cylinder head holding down studs PRIOR TO FINAL HONING.

5. TO FIT TWIN CYLINDER BORE LINERS TO A 3.625" DIA. BORE ENGINE. (M SERIES CHASSIS AND ONWARDS:)

General : The following scheme also consists of fitting twin liners when one or more of the bores are deeply scored. A long cast iron liner (RE-9927) is fitted to the lower portion of the bore and a short "Bricrome" liner (RE-9926) to the upper portion, after which, the cylinder/s can be rebored to the same diameter as the remaining bores and a new piston/s fitted.

This scheme may also be used if, after boring a cylinder block to the maximum standard oversize diameter of 3.6605" to 3.6615" (92.97 to 93 m/m) it is found that one or more of the bores have not cleaned up, in which case, twin liners should be fitted to all the cylinders; they should then be bored and finally honed to the standard diameter of 3.6255" to 3.6265" (92.08 to 92.11 m/m)

The machining and fitting procedure is the same as for the 3.500" dia. bore engine.

(i) Remove the short liner from the scored bore as described in Sub-para.(iii) of para.4 and note that when boring out the liner prior to removal that the external diameter (in position) is 3.750" (95.25 m/m) i.e. the same diameter as the cylinder counterbore.

(ii) To assist in obtaining the required interference of .0025" to .0035" (.06 to .09 m/m) between the cylinder and the liners, the short and long liners are colour coded (graded) in their bores as follows:-

a) Those marked with blue paint have an external diameter of 3.763" to 3.7635"(95.58 to 95.60 m/m).

b) Those marked with yellow paint have an external diameter of 3.7635" to 3.764"(95.60 to 95.62 m/m).

(iii) Measure the long liners (RE-9927) and select a suitable short liner (RE-9926) to match as described in Sub-para.(v) of Para.4.

(iv) Again set up the crank-case on the boring machine with the upper end of the 3.750" (95.25 m/m) dia.counter-bore CONCENTRIC with the boring cutter and bore out the cylinder in stages, the whole of its length (See 'J' Fig.4) to a diameter that will allow the correct interference fit between the cylinder and the pair of matched liners.

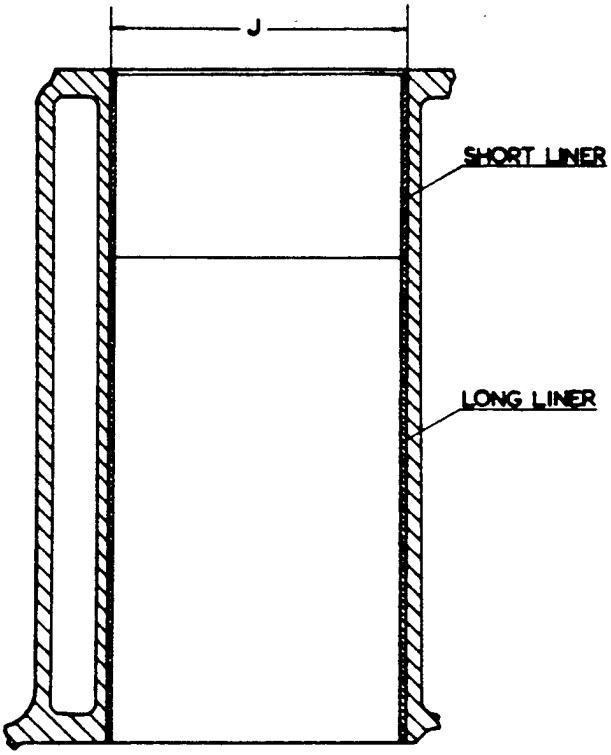

FIG.4. SECTION - CYLINDER-TWIN LINERS IN POSITION (3.625" DIA.BORE ENGINE).

(v) Next, proceed as described in Sub-paras.(vii),(viii),(ix) and (x) of Para.4.

NOTE: If the remaining bores are unaffected and are for example of standard size, i.e. 3.6255" to 3.6265"(92.08 to 92.11m/m)dia.,then the reconditioned cylinder/s(to which twin liners have been fitted), should be bored and honed accordingly. If the unaffected bores are already to a standard oversize diameter, then the reconditioned cylinder/s should be bored and honed to match. For standard over-size cylinder bore diameters,refer to table 'b' of Para.1.

(vi) Finally, refer to Sub-paras.(xi) and (xii) of Para.4.

FOR INFORMATION.

MAIN & BIG END BEARING BUSHES.

The following information and instructions will be of assistance when fitting a new or re-conditioned crankshaft to an engine, together with a set of new main bearing bushes and big end bearing bushes if necessary.

1. FITS & CLEARANCES.

(I) Crankshaft.

	DIMENSIONS NEW INS.	M/M
Standard diameter of Main journals.	2.750"-.0005.	69.85-.01.
Standard diameter of crankpins.	1.999"-.0005.	50.77-.01.
Radius on Main journals.	.093"-.010.	2.36-.25.
Radius on Crankpins.	.093"-.010.	2.36-.25.
End float of Crankshaft in centre Main bearing.	.002" to .006"	.05 to .15.
Overall thickness of each (2 off) crankshaft Thrust Washer.	.092"-.002.	2.33-.05.

(II) The diameter of the bores of the Main and big end bearing bushes are "pre-sized" to suit the diameter of the journals and crankpins respectively. This of course also applies to a re-conditioned crankshaft on which the journals and crankpins if necessary have been ground to a smaller diameter. New bearings with undersize bores are then supplied to suit.

(III) The running clearance between the main bearings and the crankshaft journals is, .002"-.0035" (.05-.088 m/m).

(IV) The running clearance between the big end bearings and the crankpins is, .0015"-.0025" (.04-.06 m/m) but not less than .0015".

(V) All crankshafts are "Nitride" treated. This process gives the requisite degree of surface hardness.

1a. CRANKSHAFT OIL RETAINING CAPS.

When a new or reconditioned crankshaft is supplied it is not fitted with journal and crankpin oil retaining caps therefore it will be necessary to remove the caps from the original crankshaft and clean and fit them to the new shaft.

There may be signs of pitting (corrosion) on the inside of the crankpin caps, but if not serious, the existing caps can be used again. Badly pitted caps should be replaced.
On certain crankshafts No.7 journal bore is not adapted to take oil retaining caps, therefore, when this type of crankshaft is supplied a rubber sealing plug, RE.7578, will also be supplied which should be fitted to the bore of No.7 journal as described in the relevant part of Service Bulletin No. BB-32 (Section F).

When a crankshaft is supplied on which No.7 journal bore is adapted to take oil retaining caps, these caps and a stud will also be supplied and should be fitted to the shaft.

It will be necessary when transferring the caps from the original crankshaft to the new one to fit new aluminium washers to the studs to prevent the possibility of oil leakage.

Additional necessary parts.

12. RE.6976 Aluminium Washer (2.B.A.) - Crankpin Stud.
13. KB.1076 Aluminium Washer (.250" DIA.) - Journal Stud.
6. KA.4602 Split Pin (.062" dia.) - Crankpin Stud.
7. K.4602 Split Pin (.062" dia.) - Journal Stud.

2. MAIN BEARING BUSHES. (Copper, lead-indium lined steel shells)

The main bearing bushes are of the "Thin Wall Precision" type. They are so accurately made that no hand fitting is required in any way. The circumferential length or "Shut Height" is held to very fine limits (this also applies to the big end bearing bushes) so that when the housing caps of the crankcase are pulled down to their correct position, the bearing will have sufficient pressure exerted on it to make it conform exactly with the housing; being flexible it will take up the exact shape of it and obtain the maximum support. It will be obvious from the above that the following points should be observed:-

a) Do not file or touch the joint faces of the bearing shells, or, touch the bores with a scraper. An internal micrometer should not be used on the bores.

b) Do not file or touch the joint faces of the housings and bearing caps.

3. WASHING AND CLEANING DISMANTLED PARTS.

NOTE:- It is of the utmost importance that all dismantled parts should be thoroughly cleaned prior to fitting new bearings.

(I) In order that the crankcase can be thoroughly cleaned and the various oilways, drilled oil passages and the oil gallery blown out with paraffin and air under pressure, it will be necessary to remove the camshaft and the two core plugs from the front and rear end of the oil gallery, i.e., from the front and rear end face of the crankcase. The oil gallery (on R.H. Side of engine) is integral with the crankcase running from end to end of it.

(II) Clean and blow out all external oil pipes.

(III) In addition to the above it will be necessary to dismantle and clean out the oil pump, the oil relief valve unit and the By-Pass Filter, fitting a new element to the latter. Also clean the wire screen of

the oil pump intake strainer.

4. TO REMOVE AND REFIT THE CAMSHAFT.

(I) With the exhaust valves, inlet and exhaust tappets removed from the crankcase first mark the position of the camshaft driving gear in relation to the camshaft by scribing a line on the hub of the gear, then removing the screws or nuts securing the gear to the camshaft and scribing a corresponding line on the camshaft.

(II) Remove the three $\frac{1}{4}$" (B.S.F.) nuts securing the camshaft thrust plate to the crankcase and carefully withdraw the camshaft. The camshaft must be supported during its removal to prevent damaging the Babbitt lined steel bearings in the crankcase.

NOTE: If the camshaft driving gear is of the Fabroil type this should be discarded and replaced by an Aluminium gear. In such case it will also be necessary to change the crankshaft pinion as this is a mated gear and is supplied as a pair with the Aluminium gear.

(III) After cleaning the crankcase refit the camshaft to the crankcase and the driving gear to the camshaft. Parts required, 7 New KB.7106 Lockwashers for locking the nuts of the thrust plate and the hexagon headed nuts of the gear.

(IV) Place a new aluminium washer (E.75427) on to each core plug, smear plugs and washers with a jointing compound and refit to the oil gallery.

NOTE: The core plugs especially the rear one should be refitted to the crankcase prior to placing the crankshaft and flywheel in position.

5. TO FIT A NEW SET OF MAIN BEARING BUSHES.

A set of Main bearings comprise the following:-

Main bearing - Front - Top.	1 off.
Main bearing - Front - Bottom.	1 off.
Main bearing - Intermediate - Top.	4 off.
Main bearing - Intermediate - Bottom.	4 off.
Main bearing - Centre - Top.	1 off.
Main bearing - Centre - Bottom.	1 off.
Main bearing - Rear - Top.	1 off.
Main bearing - Rear Bottom.	1 off.
Thrust Washer - Top.	2 off.
Thrust Washer - Bottom.	2 off.

(I) All main bearings should be numbered (etched) in pairs, i.e., the top and bottom half of a bearing should bear the same number. The numbers, 1 to 7, commencing from the front of the engine, should be etched on the lug of the steel shell. If an etching apparatus is not available then use a sharp pointed scriber. When carrying

out the above, care must be taken not to damage the bearings in any way.

(II) All top main bearing halves have two oil passage holes drilled in each half, which should correctly register with the corresponding oil passages drilled in the crankcase bearing housing. It will be noticed however, upon assembling the top halves that the oil passage hole in No.6 housing is drilled slightly off centre, this being a feature of design. No attempt should be made to elongate the corresponding hole in the top half of the bearing.
It will also be observed that No.1,3,5 and 7 housings have two oil passage holes drilled in each housing, whereas Nos.2,4 & 6 housings have only one oil passage hole. The reason for this is, there are no camshaft bearing bushes fitted to Nos.2,4 & 6 camshaft bearing housings therefore no oil feed is required.

(III) Lightly smear the back of each top half main bearing with engine oil and place them in their corresponding housings in the crankcase. Repeat for the bottom halves and place them in their corresponding caps.

NOTE:- All bearing surfaces must be perfectly clean and all bearings and bearing surfaces should be freely lubricated with engine oil. The flat faces of the main bearing caps should be lightly smeared with grease.

(IV) With the balance weights of No.3 & 4 crankpins in a horizontal position, gently lower the crankshaft and flywheel into position taking care to avoid damaging the bearings.

(V) The next operation is to fit the crankshaft thrust washers to No.4 bearing housing and cap and check the end float of the crankshaft. It is recommended that a new set of thrust washers are fitted.

Proceed as follows:-

a) Etch the letter "X" on the steel side of a top and bottom half thrust washer near the cut. This washer should be fitted to the side of the housing and cap (No.4) nearest the front of the engine. This is advisable in case the thrust washers have to be removed for any purpose; they can then be replaced in their original positions.

b) Oil the thrust washers and slide the two top halves into the recess on each side of the bearing housing. The Babbitt (white-metal) grooved side of the thrust washers must be fitted against the crank face, i.e. the Babbitt lined surface must face the crankshaft thrust face.

c) Likewise, place the two bottom halves of the thrust washers on each side of the bearing cap ascertaining that the tab of each washer correctly locates in the slots of the bearing cap.

d) Fit the bearing cap in position, place two new lockwashers, KB-7108, on to the studs and progressively tighten the nuts with a box spanner and check the crankshaft for freedom. The recommended tommy bar length is 6" (152 m/m) and this should be centrally placed in the spanner.

NOTE: When tightening the main bearing cap do not slacken back a nut to accommodate a lockwasher continue to tighten.

e) Fix a dial type indicator to the front of the crankcase, lever the crankshaft to and fro and note the amount of end float, which should be .002"-.006" (.05-.15 m/m). In the unlikely event of the end float being less than .002" it would be necessary to reduce the two washers (four halves) an equal amount and to the amount required by having the steel sides wet surface ground and re-etching the washers as necessary. After grinding, the four halves should be of equal thickness. It is important that no grinding dust should be allowed to find its way onto the Babbitt lined faces, they should therefore be examined with a magnifying flass before refitting. The overall thickness of a new thrust washer is .092"-2 (2.33-.05 m/m).

f) After the end float of the crankshaft has been checked, assemble and progressively tighten down the remaining bearing caps (placing a new lockwasher, KB.7108 under each nut) in the following order:-

No.1. No.7. No.3. No.5. No.2. & No.6.

After tightening down a bearing cap check the crankshaft for freedom. When all the caps have been tightened down it should be possible to turn the crankshaft (by hand) quite easily with the flywheel.

NOTE: In the unlikely event of a new bearing being found to be too tight, preventing free rotation of the crankshaft, then the only alternative is to replace the bearing.

g) The nuts of the main bearing caps should be locked after the oil pressure tests have been carried out (see paragraph 8, sub-paragraph IV). The fitting of new oil seals to No.7 main bearing cap should also be carried out after the oil tests. (See paragraph 9).

6. BIG END BEARING BUSHES (Copper, lead-indium lined steel shells).

The big end bearing bushes are also of the "Thin Wall Precision" type and like the main bearings they are so accurately made that

no hand fitting is required in any way.
The following points should therefore also be observed:-

a) Do not file or touch the joint faces of the bearing shells or, touch the bores with a scraper. An internal micrometer should not be used on the bores.

b) Do not file or touch the joint faces of the connecting rods and caps.

7. TO FIT A SET OF NEW BIG END BEARING BUSHES.

(I) All top and bottom bearing halves (12 off) are identical with one another. Each having a .125" (3.17 m/m) dia. hole drilled in it. The oil hole in the half bearing to be fitted to a conn. rod, as distinct from the cap of the rod, should register correctly with the corresponding oil hole drilled in the rod, through which oil passes to lubricate the small end bush.

(II) The bearing bushes should be numbered (etched) in pairs (1 to 6) i.e., the top and bottom of a bearing should bear the same number. They should be etched on the lug of the steel shell on each half of the bearing.

(III) Smear with engine oil the back of each top and bottom half of bearing and place them in their corresponding rods and caps.

(IV) The following points should be borne in mind during the assembling of the connecting rods (complete with pistons) to the engine.

a) On the large majority of engines a small hole is drilled in the side of the connecting rods which allows a fine squirt of oil to be projected on to the walls of the cylinders to assist lubrication of the bores. When re-assembling the rods to the engine these "squirt holes" must face the thrust side of the engine, i.e., not the camshaft side.

b) If split skirt pistons are used, the split must face the camshaft side of the engine.

c) The markings (Nos.) on the connecting rods should be on the camshaft side of the engine.

(V) With the pistons in place on the connecting rods space the rings so that the end gaps are approximately 120° apart. Position the crankcase so that the cylinders are horizontal.
The pistons should be placed in the cylinders and the connecting rods assembled to the crankpins in the following order:-

No. 1 & 6. No. 2 & 5. & No. 3 & 4.

(VI) Place No.1 crankpin half way down its stroke. Using a piston ring clip, lightly tap No.1 piston into its bore with the aid of a small hammer shaft. Pull the rod towards the crankpin and rotate the crankshaft until No.1 crankpin is at the bottom of its stroke and pull the rod (bearing) on to the crankpin.

(VII) Place the two bolts in position on the rod making sure that the lugs on the bolts enter and correctly locate in the recess provided on the rod.

(VIII) Fit the cap (with Nos. on cap and rod corresponding with each other) and progressively tighten the nuts with a box spanner until the split pin holes are in line. The recommended tommy bar length is 6" (152 m/m) and this should be centrally placed in the spanner.

NOTE: Do not slacken back a nut to accommodate a split pin, i.e., tighten up until pin hole registers with next castellation on nut.

(IX) Check the rod for freedom of end float on the crankpin and gudgeon pin.

(X) Refit the remaining rods in a similar manner but do not secure the nuts with split pins until the oil tests have been carried out.

8. OIL TESTS.

(I) It will be necessary to connect to the crankcase a source of oil supply (hand operated gear type pump, for example) and a reservoir with a reliable pressure gauge in circuit. To carry out the oil tests proceed as follows:-

a) Blank off oil relief valve passages situated externally on right-hand side of crankcase, by means of a suitable blanking plate and joint, utilising the three studs which secure the oil relief valve unit to the crankcase.

b) On early type crankcases, the right-hand side of the engine carries two tapped bosses which lead into the oil gallery. With an aluminium washer and a bolt .375" dia. (B.S.F.) 20.T.P.I. - RH, blank off the tapped boss (hole) situated midway along the oil gallery. The bolt should have a length of .500" (12.7 m/m) to .625" (15.8 m/m) beneath the head and fully threaded. (Before blanking off see paragraph (d) below.).

c) With an aluminium washer and a bolt .4375" dia. (B.S.F.), 18.T.P.I. - R.H. blank off the other tapped boss situated towards the rear of the oil gallery. This bolt should also have a length of .500"-.625" beneath the head and fully threaded.

d) On later type crankcases the boss towards the rear of the oil gallery is not used, the external oil feed pipe being deleted. An internal high pressure oil jet is used to spray oil direct on to the distributor drive gears from the oil gallery. The jet is 5.375" (136.5 m/m) long and is removable, being screwed into position through the tapped boss midway along the oil gallery. It is advisable to leave the jet in position but if absolutely necessary it can be removed by use of a suitable screwdriver. It can be cleaned in place by first passing the end of a piece of wire about 10" (254 m/m) long through the .0468" (1.17 m/m) diameter orifice at its inner end (the inner end is not visible) and subsequently blowing out the interior of the jet with paraffin and air under pressure through the boss midway along the oil gallery. During the oil tests a fair amount of oil should escape from it and flow down the side of the crankcase. Blank off the tapped boss (midway along the oil gallery) as described in (b).

e) Blank off the four oil feed holes in the front end of the crankshaft by means of two suitable Jubilee clips and two strips of rubber.

f) Make a suitable adaptor (for connecting up the external oil supply) and attach it to the oil pump pipe connection flange, (inside the crankcase) by means of the two existing setscrews and connect up the oil supply.

g) Using oil to correct specification (S.A.E.20) raise and maintain oil pressure at 20-25 lbs per sq.in. Turn the crankshaft slowly and ascertain that there are no oil leakages past any of the oil retaining caps and their studs as fitted to the bores of the journals and crankpins.

(II) Bearing leak should not be excessive, but it should be confirmed that oil reaches all main journals, big ends and gudgeon pins.

(III) If the connecting rods are provided with a small squirt hole on the side of the rod as mentioned in paragraph 7, a check should be made, while slowly turning the crankshaft, that a squirt of oil emerges from each rod twice during a revolution of the crankshaft. While maintaining the oil pressure and continuing the slow turning of the crankshaft also turn the camshaft slowly until a free flow of oil emerges from the oil hole drilled at the front end. Also ascertain that the camshaft rear bearing cover and the front and rear end plugs of the oil gallery are oil tight.
All leaks should be corrected.

(IV) After the completion of the oil tests, lock the 14 nuts of the main bearing caps and secure the nuts of the conn. rod bolts with 12 new

split pins, E.84689, bending the legs of the pins around the nuts.

9. TO FIT NEW OIL SEALS TO THE REAR MAIN BEARING CAP.

The next operation is to fit two new circular oil seals, RE.7144, to the rear main bearing cap and crankcase (having previously removed the original ones). These seals are made of White Pine and are provided with a square head for tapping in purposes. Tap the new seals into position as far as they will go i.e. until they make contact with the upper face of the bearing cap housing of the crankcase. Neatly cut off the heads with a sharp knife flush with the crankcase facing. They should be a light drive fit.

NOTE:- Before replacing the crankcase lower half a final check should be made that all necessary parts have been correctly locked. This also applies before replacing the wheelcase.

10. TO REFIT CRANKCASE LOWER HALF.

The following is the correct procedure:-

a) Place the crankcase lower half in position and assemble all setscrews finger tight then nip up one setscrew on each side of the lower half at the front end.

b) Place the wheelcase in position and nip up all nuts and setscrews.

c) Progressively tighten up all lower half setscrews and repeat for the wheelcase. After the road test/s have been carried out all the setscrews of the lower half should be checked for being tight.

Will all Retailers kindly inform the London Service Station whenever the Main or Big End Bearings have been replaced.

FOR INFORMATION

ALUMINIUM CAMSHAFT DRIVING GEAR.

Retailers are advised that the material of the camshaft driving gear has been altered from Fabroil to aluminium and the latter should be used for all replacements.

Will Retailers kindly note that whenever an engine is being overhauled or whenever the radiator or engine front is dismantled for other reasons this opportunity is to be taken to change the camshaft driving gear. With this in view we are arranging to send small stocks of the necessary parts to all Overseas Retailers.

In addition to changing the camshaft driving gear it will also be necessary to replace the crankshaft pinion in view of the fact that the gears are paired to obtain the correct amount of backlash.

The gears are paired on a rig to give a backlash of .002" - .004" (.05 - .10m/m) but when fitted to an engine the backlash may be found to be .006" (.15 m/m). This should not cause any disability. After fitting an aluminium gear, the letter 'A' should be stamped on the top nearside (L.H. Side) wall of the aluminium wheelcase (timing case) where it will be easily visible on lifting the bonnet.

The original crankshaft pinion should be returned to the London Service Station as soon as possible for re-grinding and re-pairing to a new aluminium camshaft driving gear.

Will all Retailers please notify the London Service Station of the chassis number of the car, whenever they incorporate this alteration.

1. PARTS REQUIRED.

The following parts and incidental parts will be required when the Spring Drive fitted to the engine is of the "Wraith" type (i.e. "Pre-Bench" type). See page 2 of Sub-Section BE-9, of the Workshop Manual.

a)

Part No.	Title.	No. off.
RE.12120.	Camshaft Driving Gear.	1.
RE.146.	Crankshaft Pinion.	1.
R.4420.	Camshaft Driving Gear.	1.)
R.4418.	Crankshaft Pinion.	1.)
		(Alternatives to RE.12120 & RE.146.)
RE.163.	Driving Pin.	2.
K.2819.	Countersunk Screws - Pinion Assy.	2.
RE.7172.	Locking Plate - Gear.	1.
KB.752/Z	Studs - Gear.	4.
K.4310/Z	Nuts - Studs.	4.
KB.7106	Lockwashers - Nuts.	4.

b) Incidental Parts required due to dismantling the Spring Drive.

E.54566.	Lockwasher - Damper Wheel.	12.	
KB.7106.	Lockwasher - Pinion to Dog.	4.	
EB.3228.	Lockwasher - Crankshaft Nut.	1.	
EW.935.	Friction Washer (Cotton Duck).	2.	When replacement is necessary.
RE.6341.	Joint, Wheelcase to crankcase.	1.	
RE.3589.	Rubber Hose - Radiator Pipes.	2.	

1A. PARTS REQUIRED.

The following parts and incidental parts will be required when the Spring Drive fitted to the engine is of the "Bench" type. (See page 2 of Sub-Section BE-9).

a)

Part No.	Title.	No. off.	
RE.12120.	Camshaft Driving Gear.	1.	
RE.3938a.	Crankshaft Pinion.	1.	
R.4420.	Camshaft Driving Gear.	1.	) Alternatives to
R.4419.	Crankshaft Pinion.	1.	) RE.12120 & RE.3938a.
RE.7172.	Locking Plate - Gear.	1.	
KB.752/Z.	Studs - Gear.	4.	
K.4310/Z.	Nuts - Studs.	4.	
KB.7106.	Lockwashers - Nuts.	4.	

b) Incidental Parts required due to removal of the Spring Drive.

RE.3947.	Lockwasher - Damper Wheel.	6.	
EB.3228.	Lockwasher - Crankshaft Nut.	1.	
KB.7106.	Lockwasher - Pinion Studs.	4.	
EW.935.	Friction Washer (Cotton Duck).	2.	When replacement is necessary.
RE.6341.	Joint, Wheelcase to crankcase.	1.	
RE.3589.	Rubber Hose - Radiator Pipes.	2.	

Note:- A full description of the "Wraith" ("Pre:Bench" Type) and the "Bench" type Spring Drive is given in Sub-Section BE-9, of the Workshop Manual, including the fitting of new Cotton Duck friction washers and setting the damper poundage (slipping load).

2. TO REMOVE THE RADIATOR, WHEELCASE AND THE SPRING DRIVE.

(i) Refer to paragraphs 4 & 5 of Sub-Section BE-9. If the Spring Drive is of the "Bench" type then refer to paragraphs, 14 & 15 concerning the removal of the Wheelcase and the removal of the Spring Drive from the crankshaft.

(ii) After removal of the outer and inner radial driving springs from the friction drum and the driven dog of the Spring Drive it will

be necessary where a "Wraith" type Spring Drive is fitted to dismantle the crankshaft pinion assembly and fit the new pinion as described in the following paragraph.

3. TO DISMANTLE THE CRANKSHAFT PINION ASSEMBLY OF A "WRAITH" TYPE SPRING DRIVE AND FIT THE NEW CRANKSHAFT PINION.

(i) Remove the two (2 BA.) countersunk screws from the crankshaft pinion assembly. With a flat ended steel punch .150" (3.8 m/m) dia; drive out the two driving pins (3. Fig.1). These pins are a tight drive fit. With an aluminium drift remove the crankshaft pinion (4) from the driven dog (1). These two parts have a taper of 1 in 200.

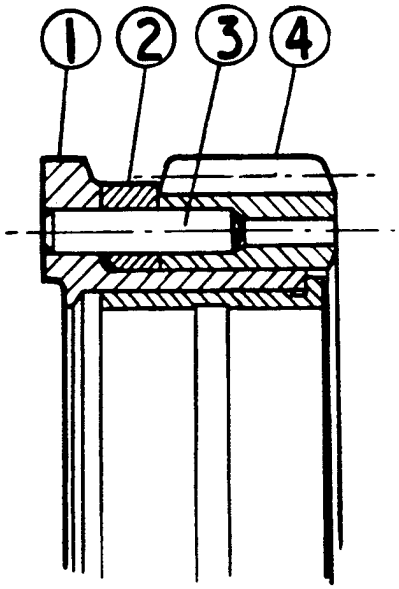

1. Driven Dog.
2. Distance Piece.
3. Driving Pin (2 off).
4. Crankshaft Pinion.

FIG.1. Scrap Section - Crankshaft Pinion Assembly. ("Wraith" type Spring Drive).

(ii) From a piece of Silver Steel rod .250" (6.4 m/m) dia., make two dummy aligning pins about 3.000" (76 m/m) long for lining up the driving pin holes in the driven dog, distance piece and the crankshaft pinion prior to fitting the new driving pins (RE.163). Try these dummy pins in the two driving pin holes in the new pinion which have a depth of .425" (10.79 m/m) if found to be tight reduce one end of each dummy pin until they are a light push fit in the pinion. With all parts free from any burrs, place the distance piece (2) and the new crankshaft pinion on to the driven dog. The chamfer on the distance piece should mate with the radius on the driven dog as shown in Fig.1.

Line up the driving pin holes and insert the dummy aligning pins into the driven dog, distance piece and pinion and press or tap the pinion fully on to the driven dog. Screw in the two countersunk screws (K.2819) and fully tighten. Remove one dummy pin and pass a .250" dia., parallel reamer down the driving pin hole in order to ream the hole in the new pinion. Remove swarf and drive in a new driving pin which must be a tight drive fit. Repeat for the other hole. Pean over metal of driven dog to secure the pins.

(iii) Place the crankshaft pinion on to the crankshaft. Attach a dial type indicator to the front end of the crankcase and check the crankshaft pinion for backlash in four places.

Note:- In the unlikely event of being unable to obtain the correct backlash then the only alternative would be to try another set of gears.

5. TO ASSEMBLE THE SPRING DRIVE ON THE BENCH AND CHECK THE DAMPER POUNDAGE.

(i) At this stage it will be necessary to assemble the spring drive (less the outer and inner radial driving springs) on the bench and check the damper poundage; fitting two new Cotton Duck friction washers should it be found necessary and re-fitting the inner and outer radial driving springs.

6. TO REFIT THE "REAR HALF" OF THE SPRING DRIVE ("WRAITH" TYPE) AND CHECK THE VALVE TIMING.

Refer to paragraph 9, of Sub-Section BE-9 of the Workshop Manual.

7. TO ALIGN AND REFIT THE WHEELCASE AND THE REMAINING DISMANTLED PARTS ("WRAITH" TYPE SPRING DRIVE).

Refer to paragraph 10, of Sub-Section BE-9, of the Workshop Manual.

8. TO REFIT THE SPRING DRIVE ("BENCH" TYPE) AND CHECK THE VALVE TIMING.

Refer to paragraph 19, of Sub-Section BE-9. of the Workshop Manual.

9. TO ALIGN AND REFIT THE WHEELCASE AND THE REMAINING DISMANTLED PARTS. ("BENCH" TYPE SPRING DRIVE).

Refer to paragraph 20, of Sub-Section BE-9, of the Workshop Manual.

NOTE:- As studs have been fitted to the camshaft in place of the original setscrews it will be necessary when carrying out the valve timing, (i.e., when altering the position of the camshaft driving gear, rotationally, in relation to the camshaft) to remove the spring drive.

After timing the engine and finally tightening up the four nuts securing the camshaft driving gear to the camshaft do

NOT omit to bend back the tabs of the lockwashers. Also prior to re-fitting the wheelcase check that all other necessary parts have been correctly locked.

FOR INFORMATION:

ALUMINIUM CAMSHAFT DRIVING GEAR

(Addendum)

With reference to Service Bulletin No. BB-103 (Section E), it should be noted that chassis numbers bearing the suffix letters, AK, AJ, BH, BG, CF, CD, DA, DZ, EY, EW, FV, FU, and GT, have been fitted with a Fabroil camshaft driving gear unless the wheelcase has been stamped with the letter 'A' as described in Bulletin No. BB-103, denoting that an aluminium gear has been fitted.

Commencing at chassis No. B-2-HR (Series H) and onwards an aluminium camshaft driving gear is fitted.

NOTE:

Where Retailers have fitted an aluminium gear to a car, prior to the issue of Bulletin No. BB-103, will they please arrange, where possible, to stamp the wheelcase with the letter 'A' at the first opportunity.

FOR INFORMATION:

ALUMINIUM CAMSHAFT DRIVING GEAR.

Concerning Service Bulletin Nos: BB-103 and BB-103a, we wish to point out that the name "Fabroil" has been loosely applied to the original camshaft driving gear, this name, should not have been used, being the registered trade mark of a particular manufacturer, and the gears were not a product of this manufacturer.

Will Retailers and other persons interested, kindly refer to these gears as fabric and not "Fabroil".

FOR INFORMATION:

ALUMINIUM CAMSHAFT DRIVING GEAR

ADDENDUM.

Concerning Paragraph 4 on Page 1 of Service Bulletin No.BB-103 (Section E), the camshaft driving gear should be checked for run-out and backlash as follows:-

(i) After dismantling the spring drive unit, including the removal of the crankshaft pinion assembly, temporarily fit the new gear to the camshaft. Prior to checking the backlash, place the registering member of a dial indicator on the front face of the camshaft gear (just beneath the teeth) as shown in Fig.1 and check the gear for run-out which should NOT exceed .002" (.05 m/m). This operation is carried out without the crankshaft pinion in position.
NOTE: The small diameter counterbore of the camshaft gear registers with the camshaft.

(ii) Place the crankshaft pinion on to the crankshaft. Secure the dial indicator to the crankcase as shown in Fig.2 and check the camshaft driving gear for backlash at four equidistant places. The registering member of the dial indicator should rest on a driving lug of the pinion as shown in the illustration and at a radius of 1.680"(42.7 m/m) from the centre of the crankshaft.

In the unlikely event of the backlash being less than .002"(.05 m/m) or exceeding .006" (.15 m/m), then the only alternative would be to try another set of gears.

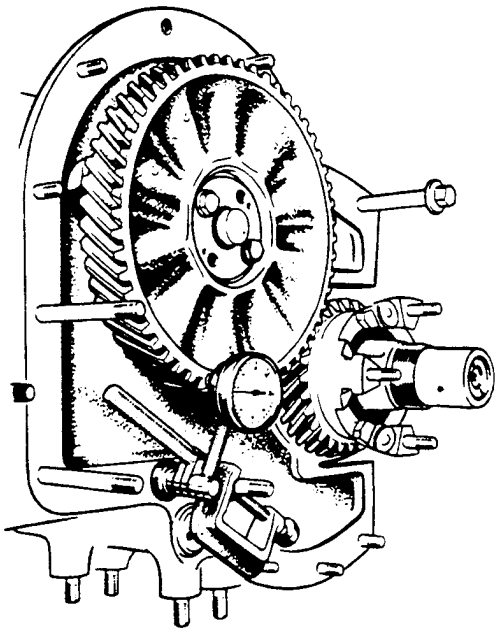

FIG. 1. CHECKING RUN-OUT OF CAMSHAFT GEAR.

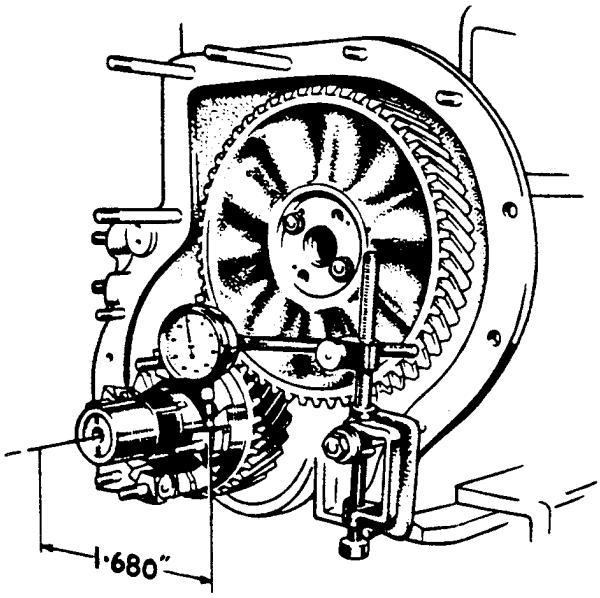

FIG.2. CHECKING BACKLASH BETWEEN PINION & CAMSHAFT GEAR.

FOR INFORMATION:

C & A CYLINDER HEAD GASKETS.

Retailers are advised that the correct procdure when fitting replacement C & A cylinder head gaskets in service is to ensure that these are fitted with the plain face uppermost and the rolled, or lapped, face to the cylinder block.

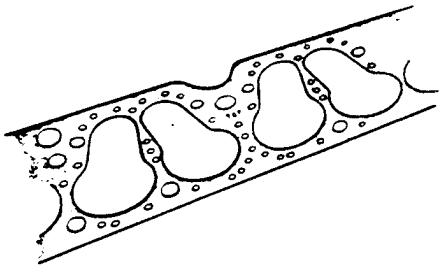

PLAIN (TOP) FACE.

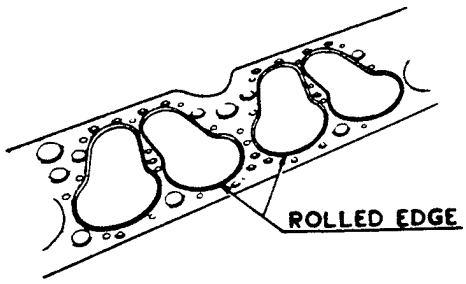

ROLLED (BOTTOM) FACE.

As an aid to recognition the characteristic differences between the top and bottom faces of the gasket are illustrated in the above two sketches. A further means of identification is provided by the word "TOP" which will be found stamped between Nos. 3 & 4 cylinder openings on the plain face as shown.

NOTE: It should be particularly noted that the only reliable and satisfactory method of tightening down the cylinder head is by means of a box spanner with a fixed length of tommy bar under the control of a skilled fitter. The recommended tommy bar length is 6", and the nuts should be tightened down evenly, working from the centre, until by experienced "feel" these are as tight as is wise having regard to the elasticity of the studs.

FOR INFORMATION:

ENGINE LUBRICATION SYSTEM.

There is a possibility that two plugs used on the external oil pipes of the engine lubrication system may be transposed if the engine is dismantled.

The attached diagram illustrates the two plugs in question, and as they are dimensionally interchangeable, it is important that their respective functions should be recognised.

Plug 'A' in the diagram (Part No.E-85380) is a normal swivel plug which transfers low pressure oil to the rocker mechanism. The diameter of the visible hole in the centre is .201" and is obviously not intended to be a restrictor.

Plug 'B' (Part No.EB-4036) is a restrictor plug in the high pressure oil feed to the skew gears driving the oil pump and distributor.

If the two plugs are interchanged, Plug 'A' with the large hole, will deliver less oil to the bearings because of the increased amount bled off to the skew gears, Plug 'B' fitted in the low pressure system will cut off most of the oil to the rocker mechanism.

The above only applies to cars prior to Chassis No.B-2-FV, as the design was subsequently changed to incorporate the high pressure jet in an internal feed from the main oil gallery, and the question of interchangeability does not arise.

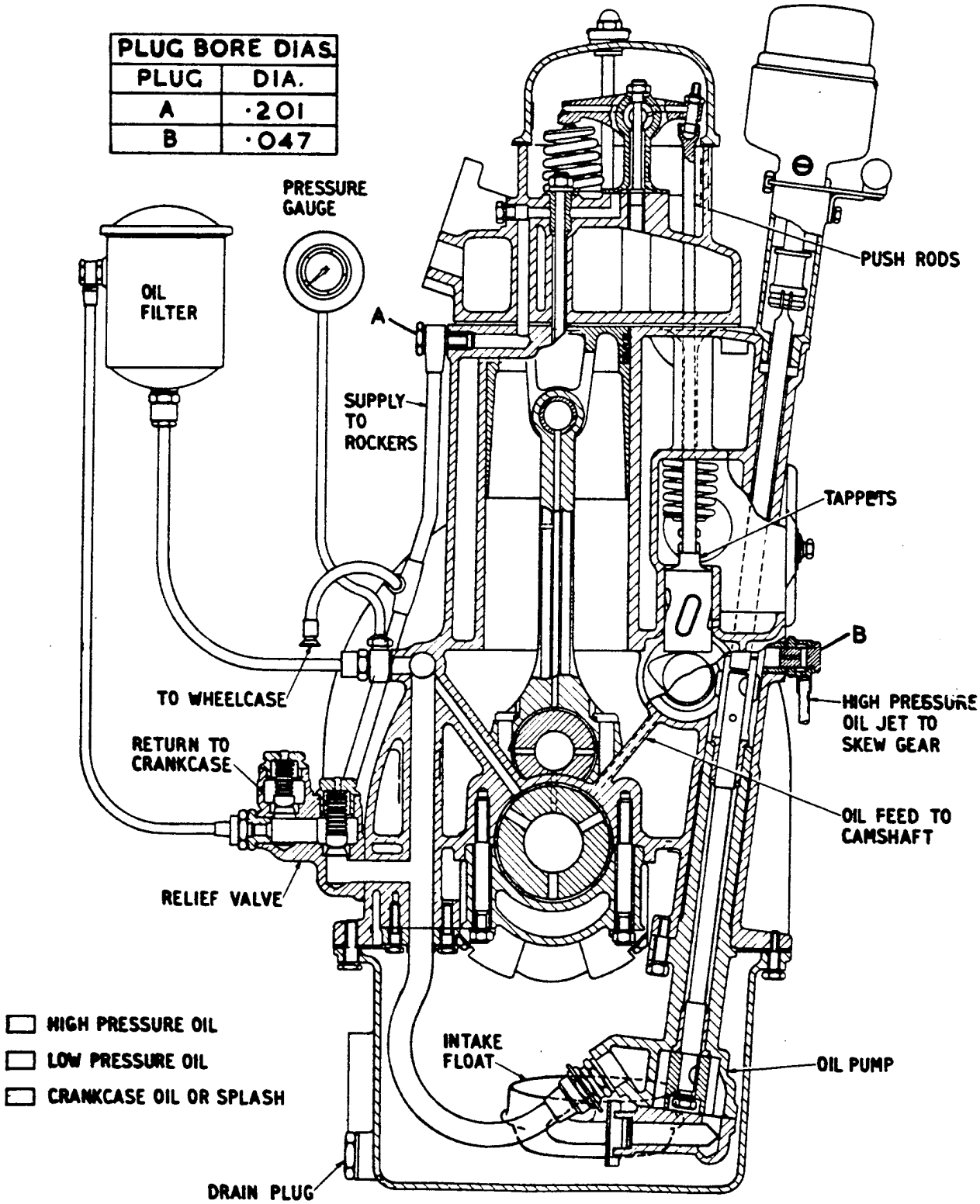

ENGINE LUBRICATION SYSTEM

FOR INFORMATION & ACTION:

FULL FLOW ENGINE OIL FILTERS.

A full flow oil filter is fitted to all engines from Chassis No.B-2-MD onwards, and it is of the UTMOST IMPORTANCE THAT THE ELEMENT SHOULD BE RENEWED AT PERIODS OF 5,000 MILES RUNNING.

If the element becomes clogged, a filter by-pass device comes into operation to ensure the continued supply of oil, but in this case there is no filtration and further running may harm the engine.

Will Retailers please ensure that they have adequate stocks of elements and that this operation is always included in the Schedules A and B at 5,000 and 10,000 miles.

An appropriate insert has been placed in Owners Handbooks, but your co-operation is requested in advising owners in your territory, who have full flow filters fitted, of the necessity for this periodic maintenance.

FOR INFORMATION & ACTION:

FULL FLOW OIL FILTERS.

RENEWAL OF FILTER CARTRIDGE:

When renewing the cartridge in full flow oil filters, the container should be filled with engine oil to a depth of 1" above the circular groove on the type with the six bolt fixing and 2" above the groove on the centre bolt type, before refitting.

If the container is replaced empty, there will be a certain time lag before oil pressure is registered on restarting, while the container is filling up. This delay in the supply of oil to the engine may have a detrimental effect on the ultimate life of bearings.

ACCESSIBILITY:

On right-hand drive cars, access to the filter is easier if the carburettor intake branch is removed.

FOR INFORMATION:

FULL FLOW ENGINE OIL FILTER.

GENERAL:

Full flow filtration was introduced on Chassis No.B-2-MD.

The scheme dispensed with the By-Pass filter and embodied a Vokes Type E-30 filter interposed in the oil delivery line between the oil pump and the crankcase oil gallery which feeds the main bearings.

The crankcase casting was altered for this purpose, the vertical passage to the gallery being diverted to the lower orifice of a new "external" facing approximately 3"(76m/m) above the oil relief valve unit; the upper orifice in this facing communicating with the gallery. The pipes leading to and from the Vokes filter, and also the oil pressure gauge pipe, are connected to an adaptor mounted on the facing. Fig.3 illustrates the external layout, but depicts a Vokes E-62 filter(centre bolt lid fixing)which is now used instead of the E-30 type (six bolt lid fixing).

In order to meet requests for the installation of full flow filtration on cars prior to B-2-MD, two separate schemes are described later in this Bulletin.

SCHEME 'A' conforms to the layout shown in Fig.3, and is relatively simple in installation, being confined to external alteration only. It can be applied to engines, the crankcase of which have the adaptor facing referred to above. Generally speaking, this modification to the crankcase was first introduced at the commencement of 'H' series to provide a means of employing full flow filtration on unit test, and in anticipation of the scheme becoming standardised later. Crankcases of this type may be recognised by reference to Figs. 1 & 2, which show special adaptors used in conjunction with the original By-Pass Filters.

SCHEME 'B' is applicable where the adaptor facing is non-existent, and other means of diverting the main oil supply are necessary, involving crankcase drilling and internal alteration of oilways. For this reason, the work is best undertaken with the engine out of the chassis, on the grounds of both accessibility and cleanliness.

THE REMOVAL OF SWARF FROM THE SYSTEM FOLLOWING MODIFICATION CANNOT BE TOO GREATLY STRESSED.

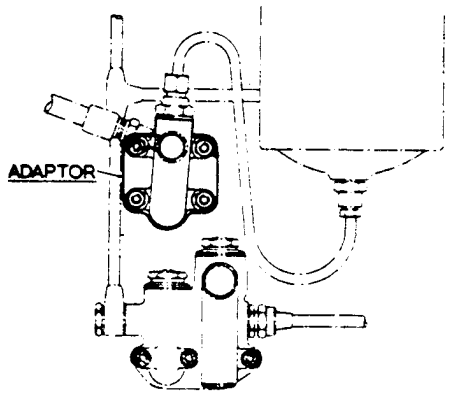

FIG.1.ADAPTOR-OIL FEED(EARLIER TYPE)

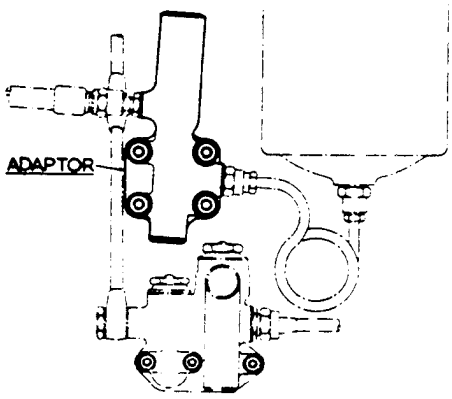

FIG.2.ADAPTOR-OIL FEED(LATER TYPE)

SCHEME 'A'

1. PARTS REQUIRED:

Part No.	Title.	No. Off.	Fig.No.	Ref.
RE-15088	Inlet pipe assembly - filter to adaptor	1	3	10
RE-15090	Outlet pipe assembly " "	1	3	6
RE.13894	Adaptor casing - oil feed	1	3	12
RE-9425	Joint - adaptor casing to crankcase	1		-
KB.359/Z	Stud " " "	4	3	14
K-4310/Z	Nut " " "	4		-
KB-7304	Core plug - adaptor casing	1	3	8
KB-1089	Washer - core plug.	1		-
RE-13938	Screw plug - adaptor casing	1	3	13
KB-1078	Washer - screw plug	1		-
RE-6240	Union - adaptor casing	2	3	7
KB-1186	Washer - union - adaptor casing	2		-
KB-5101/Z	Union - pressure gauge conn.adaptor casing	1	3	9
KB-1096	Washer - union - adaptor casing.	1		-
RE-13818	Vokes Oil Filter - Type E-62	1	3	4
RE-6424	Union - filter cover.	2	3	2
AGS-568/F	Washer - Union - filter cover.	2		-
RE-13935	Mounting plate - filter	1	3	5
RE-13939	Distance piece - mounting plate	1		-
KB-751/Z	Stud " "	1	3	1
K-9008/Z	F.S.Washer " "	1		-
K-4310/Z	Nut " "	1		-
K-4410/Z	Plain Washer " "	2		-
KC-277/Z	Setscrew - filter to mounting plate.	2	3	3
K-4407/Z	Plain washer " " "	2		-
K-9009/Z	F.S.Washer " " "	2		-
KB-7301	Core plug - oil relief valve casing.	1	3	15
KB-1081	Washer - core plug.	1		-
EB-3953	Joint - oil relief valve unit.	1		-

2. SPECIAL TOOLS THAT MAY BE REQUIRED:

Title.	No.Off	
Twist drill, .213" (5.41 m/m) dia.	1	These tools are also included in Para.6 in connection with Scheme 'B'.
Taper Tap, .250" dia. 26 T.P.I.-R.H.	1	
Plug Tap, .250" dia 26 T.P.I.-R.H.	1	

3. INSTRUCTIONS FOR FITTING: (REFER TO FIG.3)

Having removed the induction pipe, the existing By-Pass filter, adaptor (Fig.1 or 2), the connecting pipes and the oil relief valve unit, proceed as follows:-

(i) Measure the length of the four adaptor studs (in position) and if these are less than 1.350" (34.3 m/m), fit the new studs, KB-359/Z.

(ii) Remove the union from the oil relief valve unit, and with a suitable pin spanner, fit the core plug(15)and joint washer. Refit the unit to the crankcase including a new joint, EB-3953.

(iii) Fit the following parts to the adaptor casing(12). The two unions (7), the core plug (8), the union(9), and the screw plug(13), together with their joint washers. Fit the adaptor and its joint to the crankcase.

(iv) Observe whether the crankcase front lug, 'A' Fig.8(situated at top of cylinder block on R.H.side of crankcase,) has been machined back and tapped to take stud (1). If not, proceed as follows:-

a) File back the face of the lug until the filter mounting plate(5) when offered up to the crankcase lies FLAT against this lug and the two lower studded lugs.

b) With the filter mounting plate in position, centralise its two lower holes with the existing studs on the crankcase and temporarily secure in position. Using the mounting plate as a template, mark off the lug and drill a .213"(5.41m/m)dia. hole to a depth of .450"(11.42 m/m) and tap .250" dia. 26 T.P.I.-R.H. Remove the mounting plate and fit the stud(1) KB-751/Z. This makes the 3rd fixing point for the filter mounting plate.
NOTE: If the lug referred to above has been machined back, then it will be necessary to fit the circular distance piece,RE-13939, to the stud interposing it between the mounting plate and the lug when carrying out the next operations (v).

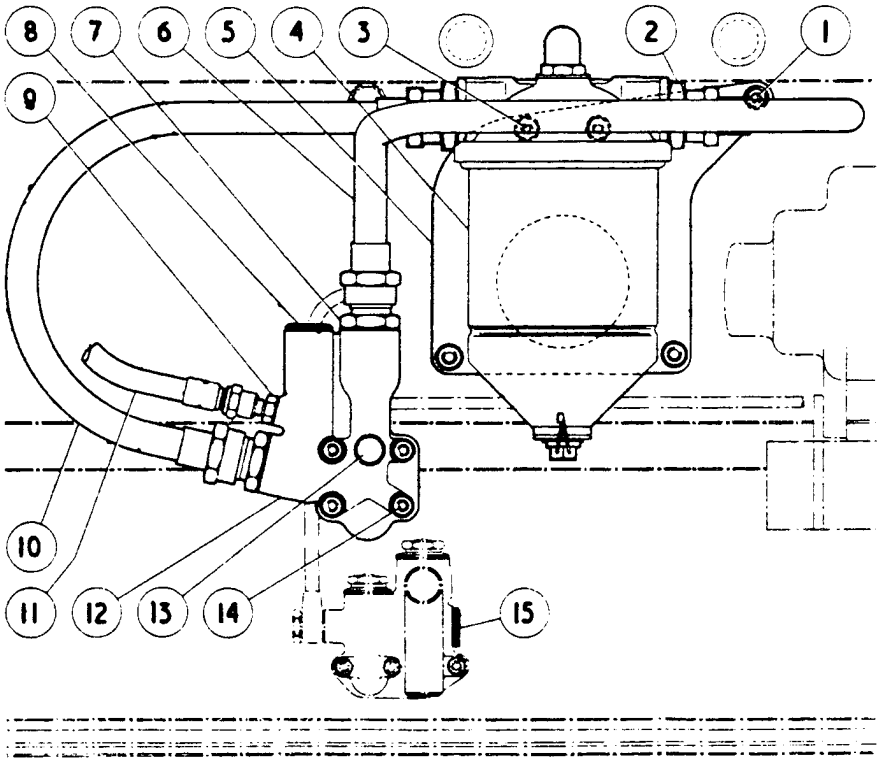

FIG. 3. FRONT ELEVATION - FULL FLOW OIL FILTER.

(v) Fit the two unions (2) and joint washers to the filter. Attach the filter to the mounting plate (5), by means of the two set-screws (3), spring and plain washers and fit the assembly to the crankcase.

(vi) With a syringe, inject a recommended S.A.E.20 engine oil into the filter through EACH of the two unions until it is full, then connect the inlet and outlet oil pipes (10 & 6) to the transfer block and filter.

(vii) Connect the existing flexible oil feed pipe, 11, (from pressure gauge) to the adaptor.

(viii) After the installation of the Full Flow oil filter, the filter system must be primed with engine oil as follows:-

a) Before starting up the engine, unscrew the union nut of the inlet oil pipe (10) from the union on the filter, and with a syringe, fully prime the pipe and then prime the oil filter. Reconnect the union nut.

b) When starting up the engine, allow it to idle until pressure shows on the oil gauge.

c) When engine is warmed up, check all connections for oil leaks.

4. LEAFLETS:

(i) The following leaflets will be sent under separate cover which must be inserted in the Owner's Handbook to advise him of the change and the necessary alterations for maintenance which this modification has involved.

Leaflet SB/3/51. (English)
Leaflet SB/4/51. (English)

(or)

Leaflet SB/3/51. (French)
Leaflet SB/4/51. (French)

(ii) Will Retailers please notify the London Service Station of the chassis number of the car whenever they fit a Full Flow Oil Filter, either to Scheme 'A' or 'B'.

SCHEME 'B'

5. PARTS REQUIRED:

Part No.	Title.	No Off.	Fig.No.	Ref.
R-4596A	Inlet pipe assembly-filter to transfer block.	1	9	6
R-4597A	Outlet pipe assembly-filter to transfer block.	1	9	8
R-4598A	Oil pipe assembly-relief valve to crankcase & wheelcase.	1	9	15
RE-3523	Washer-banjos-LP Oil pipe assy.	4		-
R-4652A	Oil feed pipe-pump to stand pipe.	1	10	20
R-4469	Transfer block - crankcase.	1	9	10
R-4536	Adaptor-transfer block.	2	9	9
KB-1089	Washer-adaptor-transfer block.	2		-
R-4497	Joint-transfer block to crankcase.	1	10	16
KB-659/Z	Stud " " "	1	9	14
KB-757/Z	Stud " " "	2	9	13
KB-1075	Washer " " "	1		-
KB-1076	Washer " " "	2		-
K-4006/Z	Nut " " "	1		-
K-4310/Z	Nut " " "	2		-
KB-660/Z	Stud-oil relief valve unit to transfer block.	3	10	18
K-4006/Z	Nut " " " " "	3		-
K-9006/Z	Spring washer " " " "	3		-
EB-3953	Joint " " " "	1	10	17
KB-7301	Core plug-oil relief valve unit.	1	9	11
KB-1081	Washer - core plug.	1		-
R-4472	Stand pipe - crankcase.	1	10	21
KB-1091	Washer - stand pipe.	1		-
RE-13935	Mounting plate - filter.	1	9	5
RE-13939	Distance piece - mounting plate.	1	10	23
KB-751/Z	Stud " "	1	9	1
K-9008/Z	Spring washer " "	1		-
K-4310/Z	Nut " "	1		-
KC-277/Z	Setscrew-filter to mounting plate.	2	9	3
K-4407/Z	Plain washer " " "	2		-
K-9009/Z	Spring washer " "	2		-
RE-13818	Vokes Oil Filter Type E-62	1	9	4
KB-5132	Union - filter cover.	2	9	2
KB-1186	Washer - Union.	2		-
RE-5720	Cover - Feed to oil gallery.	1	10	22
KB-7106/Z	Lockwasher - cover.	2		-
KC-202/Z	Setscrew "	2		-
EB-4035	Swivel Plug - oil gallery.	1	9	7
RF-3274	Washer - swivel plug.	2		-
K-1813	Cheese head screw 3-BA-plug crankcase.	1		-
KB-7104	Lockwasher-Oil baffle-sump.	4		-

6. SPECIAL TOOLS REQUIRED TO MODIFY CRANKCASE:

Part No.	Title.	No.Off	Application
R-4743	Piloted parallel reamer, .703"(17.85m/m)dia.	1	Reaming crankcase for oil feed stand pipe.
	Taper tap .750"dia 20 T.P.I.(RH)	1	Tapping crankcase for oil feed stand pipe.
	Plug tap .750"dia 20 T.P.I.(RH)	1	
R-4670	Spot facing tool and pilot.	1	Spot facing seating for standpipe.
	Taper tap, 3-BA 34.8 T.P.I.(RH)	1	Tapping taper pin hole on RH side of crankcase.
	Twist drill .375"(9.5m/m)dia.	1	Drilling through crankcase oil relief valve facing
R-4671	Drilling template.	1	For use with the .375" dia. drill.
	Twist drill, .213"(5.41)dia.	1	Enlarging the two outer stud holes in crankcase oil relief valve facing and drilling hole in crankcase lug.
	Taper tap, .250"dia 26 T.P.I.(RH)	1	Tapping outer stud holes in crankcase oil relief valve facing and stud hole in crankcase lug.
	Plug tap, .250"dia 26 T.P.I.(RH)	1	

7. INSTRUCTIONS FOR FITTING:

Having removed the induction pipe, the existing By-Pass filter and connecting pipes, the oil relief valve unit and pipes and the crankcase lower half, proceed as follows:-

(i) Remove the oil relief valve overflow pipe, (11/16"dia) from the interior of the crankcase, by twisting to shear the small securing taper pin. With a suitable punch tap out the remaining portion of the pin from the crankcase. For position of pin, refer to point 'A' Fig.7. Remove the sheared portions.

(ii) Plug the pin hole by first tapping it with the 3-BA taper tap sufficiently to make the screw, K-1813 an interference fit. To prevent the screw protruding into the bore of the overflow pipe hole, shorten it to $\frac{3}{8}$" (9.5m/m) measured from underside of head. Fit screw and remove head flush with crankcase and finally peen over to secure.

(iii) With the R-4743 (.703"dia) piloted parallel reamer, ream out the hole in the crankcase from which the overflow pipe has been removed and tap .750"dia 20 T.P.I.-R.H. using both taper and plug taps(See Fig.4).

(Cont'd)

The hole should be tapped sufficiently to allow the threaded end of the pilot of the spot facing tool, R-4670 to be a 'feel' fit when screwed into position, this will also allow the threaded end of the stand pipe, (21 Fig.10) to be a similar fit, i.e. not tight or slack, when fitted. As the wall thickness of the hole may vary from engine to engine, the reaming and tapping operations should be carefully carried out.

(iv) Screw the pilot of the spot-facing tool into the tapped hole and spot face 1.000" (25.4m/m)dia. until a clean surface is obtained (See Figs. 4 & 5). Check fit of stand pipe in hole and then remove it.

(v) Place the drilling template R-4671 (Fig.6) in position against the oil relief valve facing of the crankcase and secure. Drill a .375" (9.5m/m) dia. hole through the side of the crankcase(See Fig.7) and remove the template. Remove the three 2-BA studs from the facing, and with the .213"(5.41m/m) dia. drill, open out the two OUTER stud holes and tap .250"dia. 26 T.P.I.-R.H. (See Fig.7.)

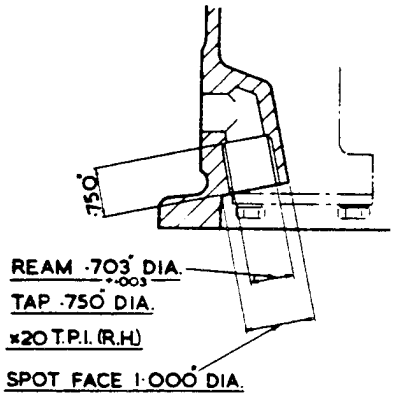

FIG.4. SECTION SHOWING MODIFICATION TO CRANKCASE FOR OIL FEED STANDPIPE.

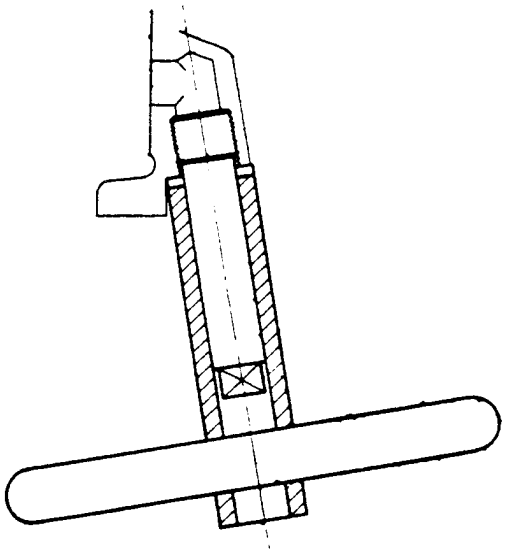

FIG.5. VIEW SHOWING SPOT-FACING TOOL IN POSITION ON CRANKCASE.

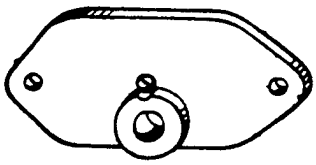

FIG.6. DRILLING TEMPLATE - CRANKCASE OIL RELIEF VALVE FACING.

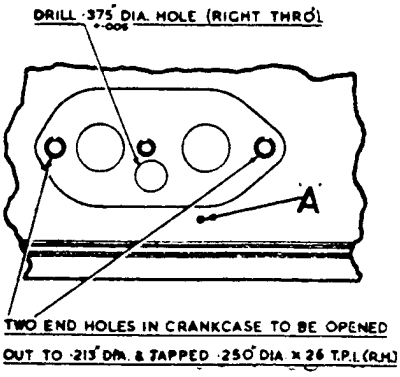

FIG. 7. SCRAP VIEW SHOWING DRILLING ETC. OF CRANKCASE OIL RELIEF VALVE FACING.

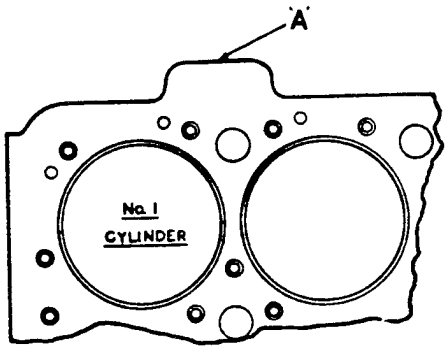

FIG.8. SCRAP VIEW SHOWING CRANKCASE LUG ('A').

(vi) File back the face of the crankcase front lug, 'A' Fig.8 and fit the stud (1) KB-751/Z as described in sub-para. (iv) of Para. 3 for Scheme 'A'.
NOTE: In the unlikely event of the lug having been machined back on an engine prior to 'H' series chassis, then it will be necessary to fit the circular distance piece (23 Fig.10) interposing it between the filter mounting plate and the lug when fitting the mounting plate and filter assembly to the crankcase as described in Sub-para.xv.

On very early crankcases, the lug may be absent altogether in which case, refer to Para. 8.

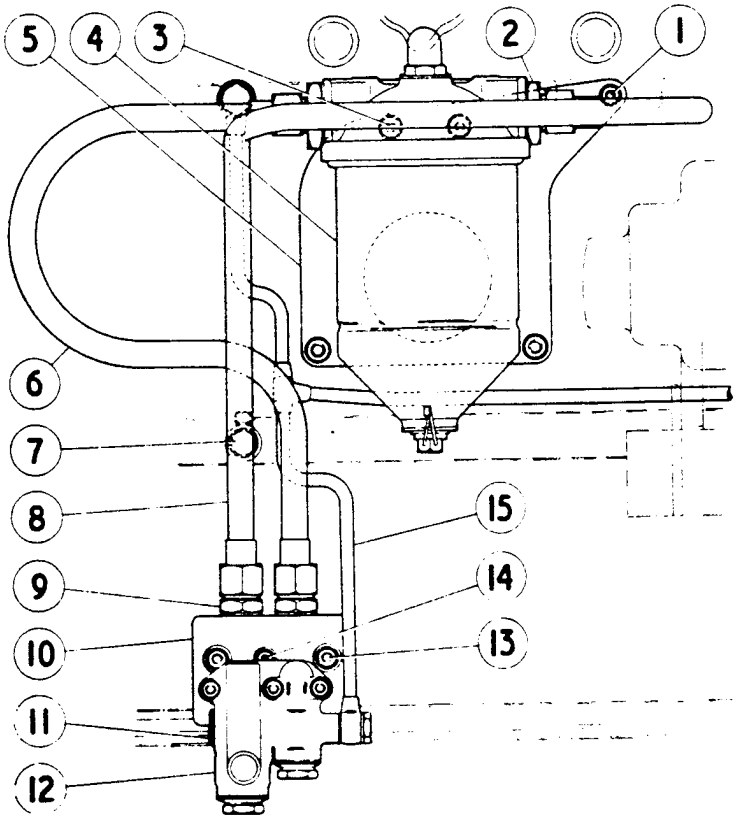

FIG.9. FRONT ELEVATION - FULL FLOW OIL FILTER.

(vii) After removing ALL TRACES OF SWARF from the crankcase, blank off the original vertical oil feed hole to the oil gallery inside the crankcase by fitting the cover, 22 Fig.10, securing it with the two setscrews and lockwashers. Thoroughly clean internally all oil pipes.

(viii) Fit the standpipe (21) and joint washer to the .750" dia. tapped hole in the crankcase. With the oil pump in position, fit the new oil feed pipe (20), securing the union nut(near pump) with the existing locking plate(19). SET NEW PIPE IF NECESSARY TO AVOID ANY STRAIN ON STANDPIPE WHEN UNION NUTS ARE TIGHTENED UP.

(ix) Fit the two studs, 13 (.250"dia. x 1.575" long) to the outer tapped holes of the oil relief valve facing of the crankcase, then fit the centre stud (2-BA x 1.500" long).

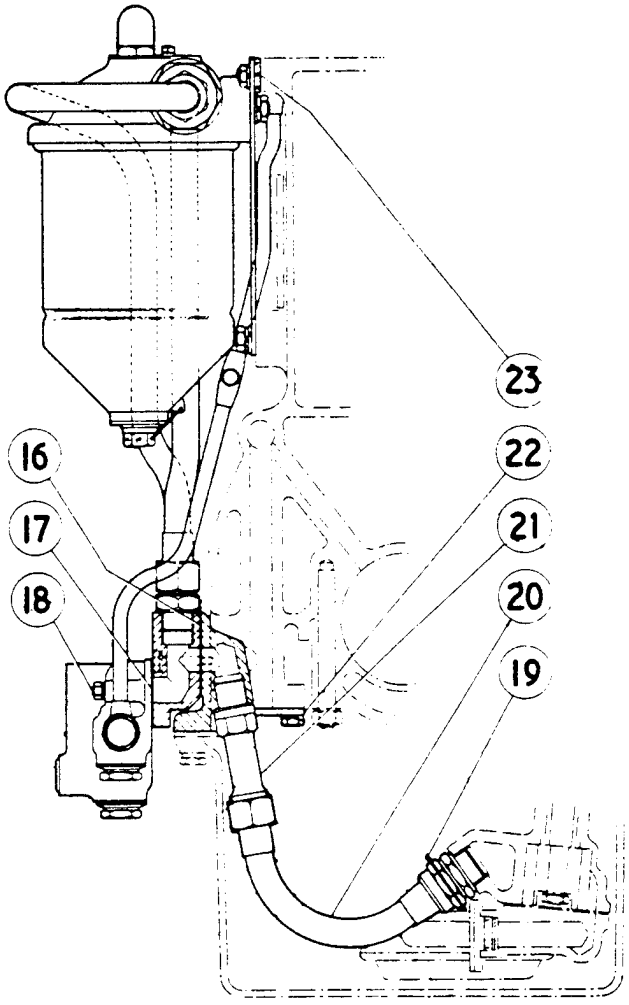

FIG.10. END ELEVATION - FULL FLOW OIL FILTER.

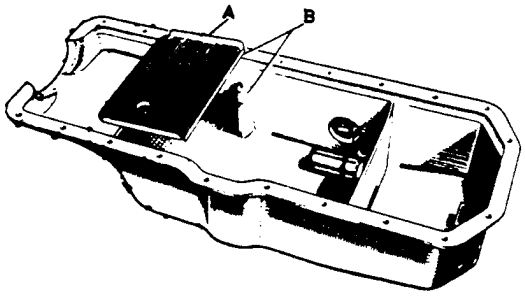

FIG. 11. CRANKCASE LOWER HALF.

(x) Fit the three studs, 18 (2-BA x 1.600" long) to the transfer block (10 Fig.9), also the two adaptors (9) and joint washers. Place the block complete with its Vellumoid joint R-4497, on to the crankcase. NOTE: As the joint is similar to the joint (EB-3953) for the oil relief valve unit except for a .375"(9.52m/m) diameter hole in the former, it is important the the CORRECT joint is fitted. Place an aluminium washer only on to each of the three studs and secure. (NO OTHER WASHERS ARE REQUIRED).

(xi) Remove the union from the oil relief valve unit and fit the core plug (11) and joint washer. Place the unit and the Vellumoid joint (EB-3953) on to the transfer block. While tightening up the three nuts to secure, check that the end of the centre stud (14) or nuts securing the transfer block to the crankcase do not foul the casing of the oil relief valve unit. The unit is inverted for fitting under this arrangement as shown in Fig.9.

(xii) Remove the existing two-way feed swivel plug from the tapped boss situated midway along the oil gallery on R.H. side of engine. Place the banjo connection of the existing flexible oil feed pipe (to pressure gauge) and joint washers on to the new one-way feed swivel plug, EB-4035 and screw it into the boss.

(xiii) When offering up the lower half of the crankcase, it will be found that the union nut securing the oil feed pipe to the standpipe (21) fouls the oil baffle ('A' Fig.11) and the locating lug at points 'B'. Remove the baffle and file the lug until it just clears the nut and then file the edge of the baffle to suit. It may also be necessary to file the inside of the lower half of the crankcase to clear the nut. Refit the baffle.

(xiv) With the crankcase lower half assembled to the engine, fit the low pressure oil pipe assembly, (15) and joint washers.

(xv) Fit the two unions (2 Fig.9) and joint washers to the filter and attach it to the mounting plate by means of the two setscrews, (3) spring and plain washers. Fit the assembly to the crankcase. (See "Note" under Sub-para. vi of Para. 7, concerning the circular distance piece, 23 Fig.10). With a syringe, inject a recommended S.A.E.20 engine oil into the filter through EACH of the two unions until it is full, then connect the inlet and outlet oil pipes (6 & 8) to the transfer block and filter.

(xvi) After the installation of the Full Flow oil filter, and having changed the engine oil, the filter system must be primed with engine oil as follows:-

a) Before starting up the engine, unscrew the union nut of the inlet oil pipe (6 Fig.9) from the union on the filter, and with a syringe, fully prime the pipe and then prime the oil filter. Reconnect the union nut.

b) When starting up the engine, allow it to idle until pressure shows on the oil gauge.

c) When the engine is warmed up, check all connections for oil leaks.

NOTE: IMPORTANT

After fitting the parts to Scheme 'B', check for foul between the steering pendulum lever ball end pin and the oil relief valve casing on left-hand lock. If this occurs, fit a modified ball pin and nut. Parts that would be required are:- R-4715 Ball end pin; R-4716 Nut and K-4614 split pin.

See para. 4. concerning Leaflets for Owner's Handbook.

8. METHOD OF FIXING UPPER END OF FILTER MOUNTING PLATE TO CYLINDER HEAD WHEN THE CRANKCASE FRONT LUG 'A' FIG.8 IS ABSENT (REFER TO FIG. 12.)

On very early crankcases where the lug has not been incorporated, it will be necessary to attach the upper end of the modified mounting plate,6 to the cylinder head by means of a bolt and a special hexagon headed threaded plug (2) fitted in place of No.2 core plug.

PRINTED IN ENGLAND

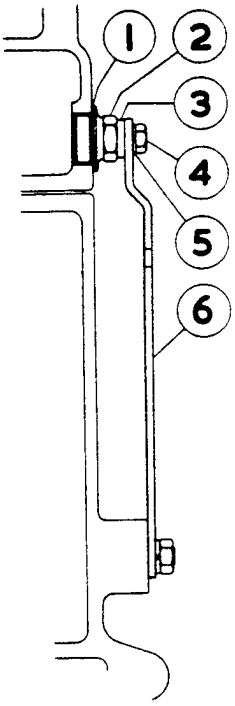

FIG. 12. METHOD OF FIXING FILTER MOUNTING PLATE TO CYLINDER HEAD.

PARTS REQUIRED:

Part No.	Title.	No. Off	Fig. No.	Ref.
KB-1092	Washer - plug	1	12	1
RE-9015	Plug - cylinder head.	1	"	2
RE-13939	Distance piece - plug.	1 (additional)	"	3
KC-905/Z	Bolt - mounting plate.	1	"	4
K-9008/Z	Spring washer - bolt.	1	"	5
R-4747	Mounting plate - filter.	1	"	6

NOTE: When the above parts are required, the following parts which figure in Para. 5 for Scheme 'B' will not be needed.

Part No.	Title.	No. Off.
RE-13935	Mounting plate - filter.	1
KB-751/Z	Stud. "	1
K-4310/Z	Nut. "	1

PRINTED IN ENGLAND

FOR INFORMATION - (IMPORTANT)

FULL FLOW ENGINE OIL FILTER.

(ADDENDUM)

Concerning Scheme 'B' of Service Bulletin No.BB-143(Section E), it has been brought to our notice that in one or two instances the external inlet and outlet oil feed pipes, (6 & 8 Fig.9 of Bulletin No.BB-143) to and from the Full Flow Filter have been reversed when fitting to the transfer block (10). This arrangement causes the filter element to collapse and block the oil flow.

To obviate this, we have re-designed the two oil pipes on which additional bends have been incorporated to make it impossible for the pipes to be incorrectly fitted, but until the existing stocks are used up, care must be taken to see that the pipes are correctly connected. To assist in this, we have marked the pipes at the transfer block end, "Front" and "Rear" and they should be fitted accordingly.

It will be observed upon reference to Fig. 9, that the lower end of the inlet oil pipe (6) is connected to the right-hand side of the transfer block and the outlet oil pipe (8) to the left-hand side.

For Category 2 Action

MODIFICATION

Aluminium Core Plugs $3\frac{5}{8}$" Bore Engine

On certain $3\frac{5}{8}$" bore engines two aluminium alloy core plugs were fitted on the left hand side of the crankcase above the tappet covers as shown at A Fig.1.

The aluminium plugs have proved subject to corrosion in service and are to be replaced with cadmium plated steel core plugs and aluminium washers as a retrospective modification. Retailers are asked to carry out replacement on all affected cars in their area when they are next being serviced.

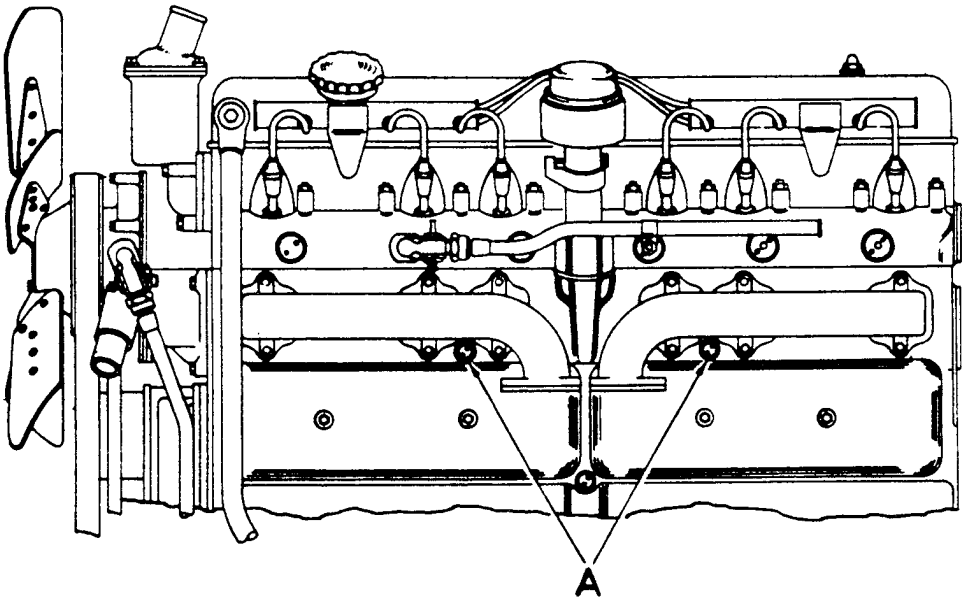

FIG.1 LOCATION OF CORE PLUGS

Chassis Numbers Affected

Bentley Mk. VI

B.2 MD to B.169 SP inclusive
B.187 SP to B.201 SP inclusive
B.207 SP and B.255 SP

Bentley Continental

BC-1-A to BC-14-B inclusive
except BC-17-A

Tools Required:

Core plug spanner R.4956
Tap $\frac{5}{8}$" x 20 T.P.I. second.

Material:

RE.20740	Core plug water jacket	2 off (Replaces KB.7301)
E.27488	Washer, aluminium	2 off

Special arrangements are being made to despatch a set of tools and a supply of core plugs to Retailers affected.

Procedure:

The spanner supplied enables the core plugs to be replaced without removing the exhaust manifold.

(i) Drain the cylinder block.

(ii) Remove the aluminium core plugs, clean the threads with the tap provided and fit the steel plugs and aluminium washers.

(iii) Refill the cooling system.

Charges:

A time of 2 hours is allowed and charges should be submitted on Guarantee Forms in the usual way.

FOR INFORMATION:

ROCKER COVER JOINT.

The rocker cover joint RE.5151 originally supplied for the 3.500" bore engine, is no longer available, and RE.10477 as issued for the 3.625" bore engine, will be used as a replacement for all engines.

This joint is .400" (10.16 m/m) longer than the previous joint, and will require shortening as under, before fitting to 3.500" bore engines:-

(i) Lay the joint on a flat surface, and, at about the centre of its length, diagonally cut one side of the joint in half. (See Fig.1).

(ii) Next manoeuvre the joint into the recess provided in the rocker cover; moulding the corners into the recess by hand.

(iii) Shorten the joint until the joint faces, when in contact with each other, will over-lap as shown in Fig.2. This will provide an oil-tight joint and allow for shrinkage.

(iv) Remove the joint and smear the recess in the rocker cover with "Heldite" or a similar jointing compound, and place the joint in position.

FIG. 1

FIG. 2

FOR INFORMATION:

PREMIUM GRADE FUELS

The re-introduction of Premium grade fuels in the United Kingdom invites many enquiries from Owners as to the effect of these fuels in their cars, and the following advice should therefore be noted on this subject.

1. As the calorific value of most grades of motor fuel is approximately the same, no increase in power can be expected when operating at the same compression ratio and ignition timing.

2. The benefit of Premium grade fuels lies in the increased anti-knock value which eliminates pinking which would occur on Pool petrol, and allows the use of increased ignition advance and/or higher compression ratios to be employed, with a resulting increase in power.

3. It follows that in order to obtain any appreciable improvement in performance with Premium grade fuels, it is necessary to re-set the ignition timing to the optimum setting if the engine is at present de-tuned to avoid pinking on Pool petrol. The optimum ignition setting on the Bentley engine is 2° B.T.D.C. It is most important that before attempting to re-set the timing, the contact breaker points should be carefully cleaned and adjusted, and the timing should be set accurately by reference to the flywheel marking (1° represents $\frac{1}{8}$" on the flywheel). Any attempt to advance the ignition to pinking point on Premium fuels will almost certainly result in loss of power.

4. A further small improvement in performance can be obtained by raising the compression ratio from 6.25 to 6.62 : 1 on the large bore engine. This can be achieved by fitting a steel gasket (.025" compressed thickness, Part No. RE.16320) in place of the present C & A gasket (.055" compressed thickness). Thinner gaskets are not available for the $4\frac{1}{4}$ litre engine. Customers who wish to have the higher compression ratio, should be warned that some increase in engine roughness might be noticeable.

5. No change in jet needles or carburation is necessary.

6. We do not recommend any particular Brand of petrol. The customer makes his own choice.

SERVICE Bulletin No. BB.170

MODEL: BENTLEY MARK VI

FOR INFORMATION: CANCELS: BB.169

CYLINDER HEAD AND GASKETS

This Bulletin cancels our Bulletin BB.169, reference SB/VK/SL 1/NT, which should be destroyed.

The return of high grade fuels to the home market has made possible the introduction of a new cylinder head (RE.19451) giving a higher compression ratio and this Bulletin gives details of the Chassis Numbers to which it is fitted.

THE BENTLEY 'R' TYPE:

The new cylinder head has been fitted to the following chassis:-

B-11-TO	B-19-TO
B-15-TO	B-49-TO to B-87-TO
B-17-TO	(inclusive)

and is being fitted as standard production from B-93-TO onwards.

This cylinder head is fitted with a copper and asbestos gasket (RE.14764) and gives a compression ratio of 6.75:1 compared with 6.4:1 with the former cylinder head (RE.10429).

The two cylinder heads can easily be distinguished as the part number is cast on the top of the left-hand side.

THE BENTLEY CONTINENTAL SPORTS SALOON

The new cylinder head (RE.19451) is also being fitted to the Bentley Continental from Chassis Number BC-4-C onwards.

It is fitted with a steel gasket (RE 16320) and gives a compression ratio of 7.20:1.

Earlier chassis are fitted with a smaller capacity cylinder head (RE.16876) and a copper and asbestos gasket (RE.14764).

CAUTION:

In no circumstances must the steel gasket (RE.16320) be fitted to the Bentley Continental with the small capacity cylinder head RE.16876 or to the Bentley 'R' Type with the new cylinder head RE.19451 as detonation at high speeds and distortion of the cylinder head may result.

ALL COMMUNICATIONS SHOULD BE ADDRESSED TO:
BENTLEY MOTORS (1931) LTD., SERVICE STATION, HYTHE ROAD, WILLESDEN, LONDON, N.W.10.

FOR INFORMATION

OVERSIZE PISTONS.

Although the Schedule of Spare Parts gives a range of oversize pistons from 0.005" to 0.045" in steps of 0.005" oversizes, it has been decided to delete certain of these, and in future, only the following oversize pistons will be available:-

0.005" (0.13 m/m) oversize piston.

0.010" (0.25 m/m) " "

0.015" (0.38 m/m) " "

0.025" (0.63 m/m) " "

0.035" (0.89 m/m) " "

FOR INFORMATION.

PISTONS.

GRADING AND FITTING

In order to maintain the specified piston to bore clearance while permitting normal manufacturing tolerance on each component, a system of piston and bore grading was introduced early in Bentley, Mark V1 production for standard size bores.

The larger sizes of piston in the range, primarily intended for new engines, can be used as replacements to eliminate piston knocks, on cars with moderate mileage, provided that the bore wear does not exceed a certain limit. In such cases a piston can be selected in relation to the actual measured bore size to give a specified running clearance.

MAXIMUM PERMISSIBLE WEAR.

The maximum wear in this context relates to the largest worn bore size for which a graded standard size piston is available.

Chromium plated bores. (used up to Chassis No.B.142.DA).

The plating extends approximately 2½" down from the top of the bore and has a maximum thickness of .0005" tapering to zero at the bottom. The bore was plated after finishing to nominal size and is therefore .001" below nominal size at the top.

Brown patches in the plating indicate that it is worn through and under these conditions the fitting of graded pistons is not recommended nor should they be fitted when the wear exceeds .0035" immediately below the chrome. In either of these conditions boring and sleeving are necessary.

Engines with short inserts (from chassis No.B.144.DA. onwards).

The limit of wear at which the largest size of graded pistons can be fitted is .0035" above nominal, 2½" down the bore. In excess of this figure it is necessary to rebore and fit oversize pistons in the normal way.

Measurement of bores.

Dimensions should be taken across the thrust diameter.

A. 1" down from the top of the bore.
B. Just below the chrome or insert portion.
C. At the bottom of the bore.
D. Just below the chrome or insert portion in line with the crankshaft if this dimension exceeds .004" above nominal a larger grade of standard size piston cannot be fitted and reboring is necessary.

Selection of suitable pistons.

Pistons should be selected from the chart to give .0032" - .0035" clearance between the top of skirt dimension and the dimension obtained 1" down from the top of the bore (Dimension A).

At the bottom of the skirt the fit should be zero to .0002" interference. It may not be possible to select a piston which gives both these conditions precisely, in which case the top of skirt dimension should be the determining factor, the bottom of the piston skirt being spread subsequently as shown below.

Expansion of skirt diameter.

To spread the skirt the gudgeon pin boss should be peened as shown in the illustrations, measurements being taken at intervals until the required diameter is obtained.

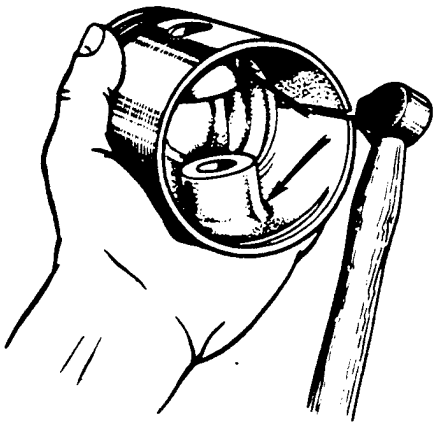

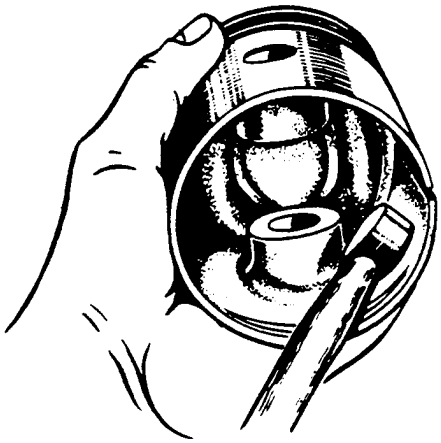

PISTON GRADES.

$3\frac{1}{2}$" BORE ENGINE.

Grade.	Diameter across pressure faces Top of Skirt.	Bottom of Skirt.
F.	3.49685-3.49715.	3.4995-3.5005.
G.	3.49725-3.49755.	3.4999-3.5009.
H.	3.49765-3.49795.	3.5003-3.5013.
J.	3.49805-3.49835.	3.5007-3.5017.
K.	3.49845-3.49875.	3.5011-3.5021.
L.	3.49885-3.49915.	3.5015-3.5025.

$3\frac{5}{8}$" BORE ENGINE.

Diameter across pressure faces.

Grade	Top of Skirt.	Bottom of Skirt.
F.	3.62135-3.62165.	3.6240-3.6250.
G.	3.62175-3.62205	3.6244-3.6254.
H.	3.62215-3.62245.	3.6248-3.6258.
J.	3.62255-3.62285.	3.6252-3.6262.
K.	3.62295-3.62325.	3.6256-3.6266.
L.	3.62335-3.62365.	3.6260-3.6270.

POLICY.

The course of action described in this bulletin should only be taken in cases of complaint and not merely on observed condition such as one might find during decarbonization. It will be appreciated that a car which is running quite satisfactorily should not be disturbed. It should also be noted that high oil consumption may be rectified by fitting new piston rings in most cases and only rarely should new pistons be necessary.

In cases where no stock of graded standard size pistons is held, replacements may be ordered from this service department, ready to fit, if bore dimensions are supplied. It is also important that new gudgeon pins and bushes should be fitted with the replacement pistons in every case.

FOR INFORMATION

E.62 FULL FLOW FILTERS.

Cases have occured of the filter casing being fractured by over-tightening of the centre bolt.

When re-tightening after cleaning and re-fitting a new "Element", the centre bolt should be nipped up gently using a 6" spanner to an approximate load of 5 lb - Ft which is all that is required to make a leak proof joint. On test, it has been found that a load of 20 - 25 lbs - Ft will fracture the filter head.

FOR INFORMATION:

FULL-FLOW OIL FILTER SERVICING

On Bentley "R" type cars fitted with the latest Hot an Cold (Continental) demisting system, it has been found that the previous method of lifting out the detached filter element and bowl, past the dynamo, is no longer possible, due to the positioning of the heater pipes.

The following method is now recommended. Disconnect the air pipe from the matrix under the wing, and also from the blower motor on the dash. Disconnect the windscreen washer reservoir and remove the "bottle". Loosen the strap holding the air pipe and withdraw pipe.

The filter bowl can now be withdrawn without difficulty.

TOP DECARBONISATION MATERIAL.

When the earlier engines are reconditioned at the Works, Full-Flow Filter equipment is invariably installed. At the same time, minor modifications affecting the scale of decarbonisation material, may be embodied. As it is not practicable to keep record of these retrospective modifications, Retailers are asked to bear in mind the following points when ordering decarbonisation material.

a) Where the rocker cover breather has been fitted, a replacement washer, KB-1092 will be required.

b) Where aluminium tappet doors have been fitted, washers RE-5427, 2-Off, will be required in place of EB-4059 2-Off.

c) The corrugated hose, RE-18218, may be fitted to any chassis fitted with the deep-type radiator, and the existing three-piece lower connection discarded.

d) The presence of a Full-Flow Filter will be recognised immediately, and in such cases, the By-pass Filter will not be required.

Upon reference to the schedules, the material required for a particular chassis may be readily ascertained.

Appendix "A" refers to B-VI cars and Appendix "B" to 'R' type and Continental.

Appendix "A". (A-P Series)

Part No.	Description.	1	2	3	4	5	6	7
EB-1866	Packing, inlet valve.	6	6	6	6	6	6	6
EB-1747	Ring, valve retaining.	6	6	6	6	6	6	6
EB-3998	Bush, rocker cover stud.	3	3	3	3	3	3	3
KB-1092	Washer, breather connection.		1	1	1	1	1	1
EB-4042	Washer, distributor housing joint.	1	1	1	1	1	1	1
EB-4039	Washer, exh. manifold to crankcase joint.	6	6	6	6	6	6	6
EB-4468	Washer, manifold to pipe flange joint.	2	2	2	2	2	2	2
EB-3581	Washer, hotspot to cylinder joint.	1	1	1	1	1	1	1
EB-4003	Washer, inlet manifold to cyl.head joint.	4	4	4	4	4	4	4
RE-10477	Washer, rocker cover joint.	1	1	1	1	1	1	1
RE-3523	Washer, rocker oil feed connection joint.	2	2	2	2	2	2	2
CD- 151	Washer, sparking plug.	6	6	6	6	6	6	6
EB-4059	Washer, tappet cover joint.	2	2					
RE-5427	Washer, tappet cover joint.			2	2	2	2	2
EB-4232	Joint, carburettor to manifold.	2	2	2	2x	2x		
RE-10611	Joint, carburettor to manifold.						2x	2x
RE-19719	Gasket, cylinder head.	1	1	1	1	1	1	
RE-14764	Gasket, cylinder head.							1
RE- 51	Washer, coolant elbow joint.				1+	1+	1+	1+
EB-3580	Washer, water conn.inlet pipe joint.	4	4	4	4x	4x	4x	4x
RE-16572	Packing piece, carburettor				2+	2+	2+	2+
EB-5015	Hose, by-pass.	1	1	1	1			
RE-12659	Hose, by pass.					1	1	1
RE-3589	Hose.	4	4	4	2	2	2	2
RE-20597	Washer, float chamber joint.	4	4	4	4x	4x	4x	4x
RF-3274	Washer, alum. tappet cover.	4	4	4	4	4	4	4
F-89195	Washer, cork petrol filter.	1	1	1	1	1	1	1
RE-18218	Hose, corrugated.				1	1	1	1
Y- 264	Element.	1	1	1	1	1	1	
RE-9830	Washer, cork.	1	1	1	1	1	1	
RE-15063	Element.)							1
RE-15062	Felt.) Full Flow Filter.							2
RE-16060	Rubber joint.)							1
E- 75034	Washer, sealing)							1

x Not used on L.H. cars E - P Series.
+ Used only on L.H.cars E - P Series.
NOTE: E-7503+ is required for single stud fitting only.

Column 1. B-2-AK to B-196-BH.
2. B-198-BH to B-401-BG.
3. B-2-CF to B-268-DA.
4. B-270-DA to B-133-GT and B-141 to 205 and 209-229-GT.
5. B-135-GT to B-55-HP and B-71 to 81-HP, except B-141 to 205 and B-209-229-GT.
6. B-57-HP to B-401-LH except B-71 to B-81-HP.
7. B-2-MD to B-301-PU.

Chassis Series:

AK, AJ, BH, BG, CF, CD, DA, DZ, EY, EW, FV, FU, GT, HR, HP, JO, JN, KM, KL, LJ, LH, MD, MB, NZ, NY, PV, PU.

Appendix "B".

TOP DECARBONISATION MATERIAL.

Part No.	Description.	'R' Type	Continental. A	B	C	D
RE-14764	Gasket, cylinder head (clay)	1	1	1	*	
RE-16320	Gasket, cylinder head (steel)				*	
UE-418	Gasket cylinder head.					1
CD-151	Washer, sparking plug.	6	6	6	6	6
EB-1747	Ring, valve retaining.	6	6	6	6	6
EB-1886	Packing inlet valve.	6	6	6	6	6
EB-3580	Joint, inlet manifold water connections.	4	4	4	4	4
EB-3581	Joint, hotspot to cylinder head.	1	1	1	1	1
EB-3998	Bush, rocker cover stud.	3	3	3	3	3
EB-4003	Joint, inlet manifold to cylinder head.	4	4	4	4	4
EB-4039	Washer, exhaust manifold	6	6	6	6	6
EB-4042	Joint, distributor housing.	1	1	1	1	1
EB-4468	Washer, manifold to pipe flange joint.	2	2	2	2	2
F-89195	Washer, petrol filter.	1	1	1	1	1
KB-1092	Washer, breather connection.	1	1	1	1	1
RE-3523	Washer, rocker oil feed.	2	2	2	2	2
RE 3589	Hose, radiator bottom/top.	2	1	1	1	1
RE-2427	Joint, tappet cover.	2	2	2	2	2
RE-10620	Joint air intake to carburettor.	2	2	2	2	2
RE-10477	Joint rocker cover.	1	1	1	1	1
RE-10611	Joint carburettor to manifold.	2	2	2	2	2
RE-12659	Hose by-pass.	1	1	1	1	1
RE-13241	Joint, air intake to silencer.	1	1	1	1	1
RE-18218	Hose, corrugated.	1				
RE-18328	Hose, radiator top.		1	1	1	1
RE-18327	Hose, radiator bottom.		1	1	1	1
RE-20597	Washer, float chamber.	4	4	4	4	4
RF-3274	Washer, aluminium tappet cover.	4	4	4	4	4
RE-15063	Element, oil filter.	1	1	1	1	1
RE-15062	Washer, Felt.	2	2	2	2	2
RE-16060	Joint, oil filter.	1	1	1	1	1
E-75034	Washer, aluminium, oil filter.	1	1	1	1	1

* Use RE-14764 up to Chassis No.BC-3-C and RE-16320 from BC-4-C to BC-101-C except where a $3\frac{3}{4}$" bore engine has been installed retrospectively when a UE-418 is required. If the question of fitting a steel gasket arises other than above, refer to Bulletin BB-170.

NOTE: E-75034 is required only where the single stud fitting is employed.

Chassis Series:

'R' Type: RT, RS, SR, SP, TO, TN, UM, UL, WH, WG, XF, YD, YA, ZX.

Continental: BC-A, BC-B, BC-C, BC-D.

Category 2.

MODIFICATIONS TO CHASSIS FITTED WITH AUTOMATIC GEARBOX AND ALUMINIUM BELL-HOUSING.

In order to prevent the possibility of accelerated wear of the flywheel ring gear teeth on cars fitted with an Automatic Gearbox and an aluminium bell-housing the following modifications are to be carried out retrospectively on a Category 2 basis:

a. Fitting a new starter drive assembly and radiusing the flywheel teeth.

b. Fitting an oil pressure operated switch in the solenoid circuit of the Automatic Twin S.U. Induction System.

This Bulletin gives details of both modifications and Retailers are asked to carry them out on the affected cars in their area as they come in for service.

1. CHASSIS NUMBERS AFFECTED:

These modifications apply to all cars fitted with an Automatic Gearbox and aluminium bell-housing. Early left hand drive cars with Automatic Gearbox had a cast-iron bell-housing and are not affected.

Chassis numbers to be modified are as follows:-

Bentley Sports Saloon:

R.H.D. All Automatic Gearbox cars in Series S, T, U, W and X and in Y Series up to and including Chassis Number B-156-YD except B-2-YD, 4, 6, 18, 24, 62, 74, 80, 88, 90, 92 and B-94-YD.

L.H.D. B-35-LUL, B-37-LUL and from B-200-LUM and onwards in U Series. All Automatic Gearbox cars in W and X Series and in Y Series up to and including B-152-LYD.

Bentley Continental:

R.H.D. and L.H.D. All Automatic Gearbox cars up to and including BC-36-D.

The new starter drive assembly has been fitted on production from B-158-YD and BC-37-D and onwards and on those chassis excepted above. Other chassis may have been modified in service.

Continued/-...

2. PARTS REQUIRED:

Modification A.

R.5300 Starter Drive Assembly R.H. - Eccentric Housing R.5301 Starter Drive Assembly L.H. - Eccentric Housing	1 Off as required.

A starter drive assembly with an eccentric housing is specified to ensure that the backlash between the starter pinion and the flywheel teeth is a minimum of .015".

Modification B.

R. 5304	Assembly Automatic Choke	1 Off.
RE.21918	Assembly Bracket - Support Fast Idle Cam	1 Off.
RE.21908	Assembly Link - Fast Idle Cam	1 Off.
RE.21735	Fast Idle Cam	1 Off.
UE. 514	Fulcrum Pin - Fast Idle Cam	1 Off.
RE.21917	Oil Pressure Switch	1 Off.
RE.21688	Adaptor - Oil Pressure Switch	1 Off.
16/.012	P.V.C. Cable - Light Blue	2 Feet.
RD. 3690	Cable Eye 3.B.A.	2 Off.
RD. 3106	Rubber Elbow Sleeving	1 Off.
RD. 7589	Rubber Sleeve	1 Off.
	Sleeving P.V.C. 5 m/m - Black	2 Feet.

The Automatic Choke Assembly will have the spring tensioner on the spindle, the solenoid air gap and the kick diaphragm travel correctly set.

Supplies of parts required for both modifications are being despatched to Retailers concerned.

3. MODIFICATION A - STARTER DRIVE ASSEMBLY:

A new starter drive assembly with a longer pinion and longer engaging stroke is to be fitted to prevent edge-to-edge engagement of the pinion, or possible disengagement, immediately after the completion of a compression stroke and to increase the backlash between the pinion and the ring gear reeth. The new assembly may be recognised by the moulded rubber rear end cover which replaces the steel cover on the earlier type.

The flywheel ring gear teeth are also to be radiused .100" (2.54 mm) to remove the sharp corner on the engaging face.

Continued/-...

Procedure:

(i) Remove the starter motor complete. Remove the starter drive assembly from the motor and refit the new drive assembly.

(ii) Remove the flywheel lower cover and radius the flywheel teeth with a medium file as shown in Fig.1.

(iii) Refit the starter motor and flywheel lower cover.

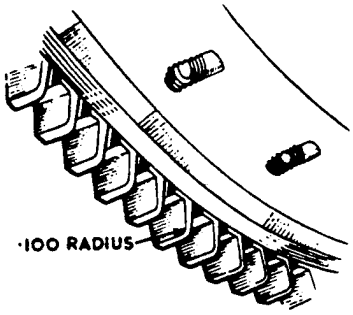

FIG.1.
RADIUS ON FLYWHEEL TEETH.

4. MODIFICATION B - OIL PRESSURE SWITCH:

An oil pressure operated switch is to be incorporated in the solenoid circuit of the Automatic Choke of the twin S.U. Induction System to ensure positive cold starting. The operation of this switch, and of the new Automatic Choke Assembly that is required with it, is described in Bulletin BB-188.

It is not required to fit the bi-metallic switch that is now fitted on current production and is described in Bulletin BB-188A.

Procedure:

The procedure for modification of the Automatic Induction System is fully detailed in Bulletin BB-208 Section M. However, for this shorter modification, the bi-metallic switch is not to be fitted and the following points should be noted when following the text:

(i) Para (vi) and Fig.3 do not apply.

(ii) Para (viii) does not apply. The following should be substituted:-

"Remove the existing beige feed wire to the solenoid from the triangular 12 way junction box on the dashboard. The wire leaves the junction box and passes down the dash in the main loom under the conduit leaving the main loom at the valance to lead to the solenoid switch. Remove the conduit elbow from the dash and pull the beige wire down to the top of the conduit. Reconnect it to the main ignition fuse in the distribution board as shown in Fig.5. with a 3.B.A. cable eye and rubber sleeve, cutting to length as necessary. Replace the conduit elbow.

Continued/-...

(iii) Fig. 5. Delete the bi-metallic switch and consider the beige cable as one length.

5. CHARGES:

A time of 6 hours is allowed for both modifications and charges should be submitted on a Guarantee Form in the usual way.

FOR INFORMATION.

EXHAUST VALVE SPRINGS.

$3\frac{5}{8}$" BORE ENGINES.

On $3\frac{5}{8}$" bore engines, commencing at Chassis No. B-2-MD, and BC-1-A (Continental) the undermentioned exhaust valve springs and bottom washers were fitted :-

(RE.3954, Spring, (approximate free length when new is 2.040")
(RE. 976, Bottom washer.

Subsequently the above were superseded by an improved spring of constant rate and lower stress :-

(RE.15959, Spring (approximate free length when new is 1.860")
(RE.15960, Bottom washer.

Whenever it is necessary to renew one or more of the earlier type springs, RE.3954, a complete set of the improved type springs, RE.15959 should be fitted TOGETHER with the bottom washers, RE.15960.

Apart from the difference in the free length of the two types of springs, identification as to which type of spring is fitted to a particular engine, may be determined upon reference to the bottom washer (see Fig.1 and Fig.2) from which it will be observed that the base of the later type is not recessed.

In all cases the top washer, RE.975 is retained.

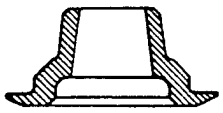

Fig.1 - Section
RE-976 - Washer

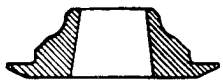

Fig.2 - Section
RE-15960-Washer

FOR INFORMATION.

TOP DECARBONISATION MATERIALS

With reference to Service Bulletin BB-204 it is advised that the scale of material laid down for "R" type Chassis is also applicable to ZY Series Chassis.

Will Retailers please note that the Schedules set out in Service Bulletin BB-204 supersede all previous issues which should be destroyed.

FOR INFORMATION

DUAFLEX PISTON RINGS.

It has been the practise of the London Service Station for sometime now to fit Wellworthy Duaflex Oil Control Rings to engines where heavy oil consumption has been reported.

As this type of ring has proved very satisfactory, it has now been decided to discontinue the use of the standard Slotted Oil Control Ring, and all oversize pistons will now be supplied with a Duaflex Oil Control Ring.

There are still a few Bentley Mark VI 3½" bore cars in Service with chromium plated bores (at upper end), and as the normal Duaflex Ring is not suitable for fitting to such engines the Duaflex Gold Line Ring must be used. The Part Number of this ring is RH-411.

A complete list of Duaflex Rings, which are to supersede the original scraper ring are given overleaf.

It will be noted that one size Duaflex Ring is suitable for a small range of oversize bores. The actual size is as follows :-

Standard ring is suitable for :- Standard to .019" o/size bores.
.020" o/size ring is suitable for :- .020" o/size to .039" o/size bores.
.040" o/size ring is suitable for :- .040" o/size to .059" o/size bores.

The sizes quoted above are those to which the respective rings are capable of expanding i.e. .019" in each case.

The ring gaps are pre-sized and must therefore not be altered.

TO ASSEMBLE TO A PISTON

NOTE: On existing pistons all grooves and oil drain holes must be thoroughly clean and free from carbon.

(i) Place the expander in the groove first, and then SPIRAL the rails on one by one, taking care to arrange the gaps all round the pistons. The top rail will need a little pressure to enter the groove, as the assembled ring is slightly wider than the groove.

(ii) Check that the assembled ring, lightly oiled, can be moved round in the groove.

(iii) Oil with light oil and install with fitting clamp.

NOTE: The three side rails are identical and may therefore be installed either way round. The assembled order on a piston is :-

Expander, two side rails uppermost, centre spring and one side rail at bottom.

MODEL.	PART NO. OF ORIGINAL OIL CONTROL RING.	SIZE.	SUPERSEDED BY.
Bentley Mark VI	RE.12565.	Std.	RE.21327.
$3\frac{1}{2}$" bore	RE.13841.	.005 o/s.	RE.21327.
	RE.13842.	.010 o/s.	RE.21327.
	RE.13843.	.015 o/s.	RE.21327.
	RE.13844.	.020 o/s.	RE.21329.
	RE.13845.	.025 o/s.	RE.21329.
	RE.13846.	.030 o/s.	RE.21329.
	RE.13847.	.035 o/s.	RE.21329.
	RE.13848.	.040 o/s.	RE.22039.
	RE.13849.	.045 o/s.	RE.22039.
Bentley Mark VI	RE.13605.	Std.	R. 5207.
$3\frac{5}{8}$" bore	RE.13766.	.005 o/s.	R. 5207.
Bentley 'R'Type	RE.13767.	.010 o/s.	R. 5207.
$3\frac{5}{8}$" bore	RE.13768.	.015 o/s.	R. 5207.
Bentley Continental	RE.13769.	.020 o/s.	RH. 354.
$3\frac{5}{8}$" bore	RE.13770.	.025 o/s.	RH. 354.
	RE.13771.	.030 o/s.	RH. 354.
	RE.13772.	.035 o/s.	RH. 354.
	RE.13773.	.040 o/s.	RH. 355.
	RE.13774.	.045 o/s.	RH. 355.

MODEL: BENTLEY MARK VI

This Bulletin Cancels
Bulletin No. BB.243
dated 15. 7. 60.

CATEGORY 3

'VOKES' FULL-FLOW OIL FILTER

It has been established that on a small number of 'Vokes' Full-Flow Oil Filters it is possible for the oil to pass across the filter head without passing through the filter element. This condition is only possible when the outer lip of the filter head (see A Fig.1) stands proud of the inner sealing face.

Therefore when the bowl of the filter is removed to change the filter element and seals, on the 5,000 miles service schedule, Retailers should check the filter head with the aid of a straight edge as illustrated in Figures 1 and 2.

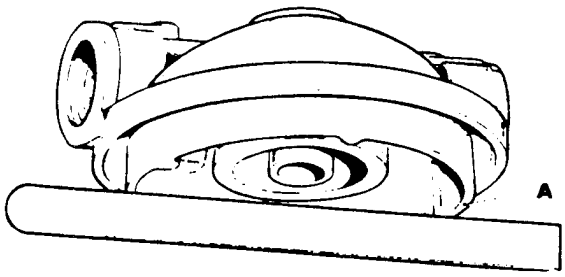

Fig.1 Outer Lip Proud of Inner Sealing Face.

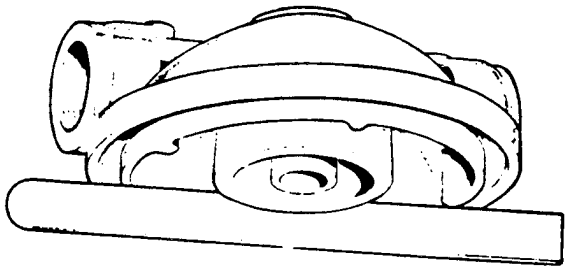

Fig.2 Inner Sealing Face Proud of Outer Lip.

If the outer lip is found to stand proud of the inner sealing face (see Fig.1), a modified 'Top Cap' (see Fig.3) should be fitted and the original discarded.

If the inner sealing face stands proud of the outer lip (see Fig.2) the original 'Top Cap' (as shown in Fig.4) can be retained. For future replacements only the modified 'Top Cap' will be supplied.

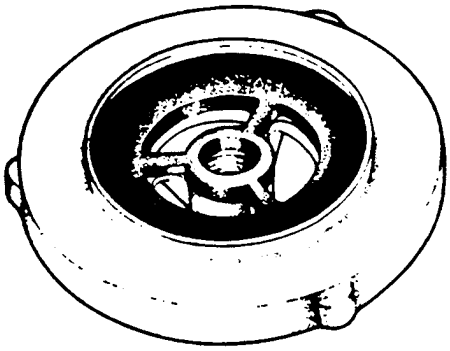

Fig.3. Modified 'Top Cap'

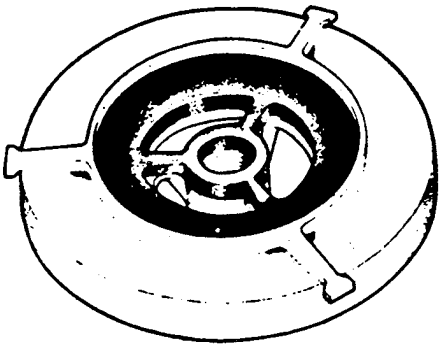

Fig.4. Original 'Top Cap'

The filter head should be painted with a green spot to serve as a means of identification after the above instructions have been carried out.

CLUTCH PEDAL.

Some slight difficulty may be experienced by certain Owners in changing gear on the Standard Saloon due to the fact that the clutch may not be completely dis-engaged when the pedal is depressed.

The clutch pedal has three notches in the stem, and most pedals have been set in the centre notch. As it is necessary to have a minimum of 1.3/8" free clutch pedal travel, it has been found that in order to allow for the thickness of the carpet, it is better to fit the pedal in the first notch, and all future clutch pedals will be set in this position.

It is recommended that this alteration should be carried out on existing cars when convenient at Service Stations.

CLUTCH SLIP.

For Information:

The information contained in this Bulletin is issued for guidance in the event of complaint being received of a slipping clutch, the principal causes of which are:-

A. Insufficient free travel of the clutch pedal preventing full engagement of the clutch.

B. Oil or grease on the friction surfaces of the driven plate assembly.

The correct procedure for treatment is as follows:-

A. ADJUSTMENT:

Before resorting to any dismantling for slip, the free travel of the clutch pedal should be measured and adjusted if necessary as follows:-

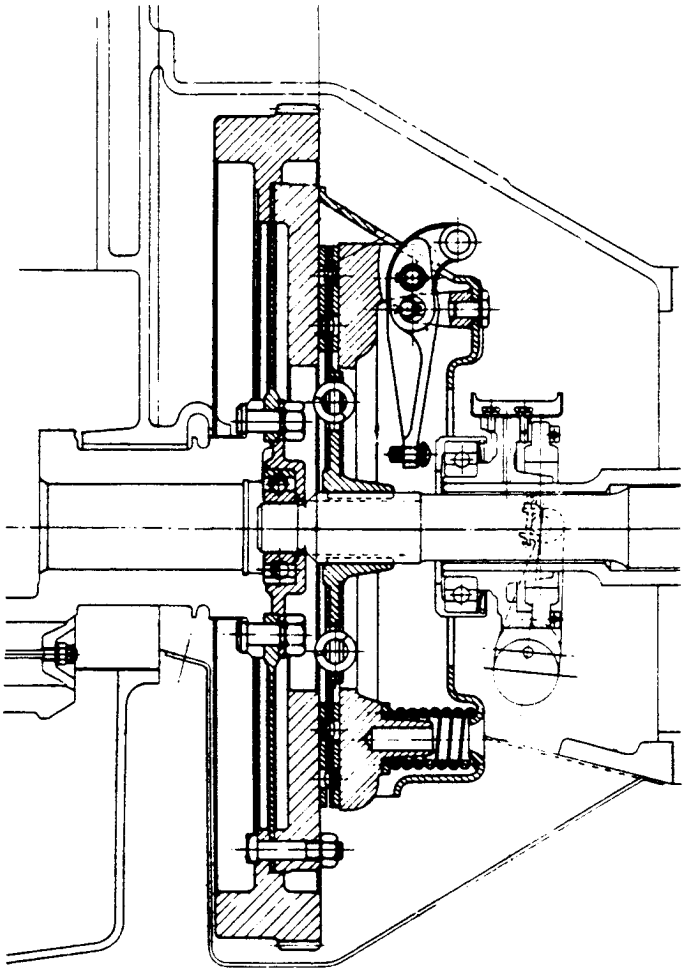

Fig.1. Section through flywheel and clutch.

With the clutch pedal lever against its up-stop under the pedal gap plate, place the edge of a rule against the centre of the side of the pedal and the end of it against the dash, depress the pedal by hand until the clutch release bearing just touches the three release levers of the clutch. Measure the free travel which should be $1\frac{1}{2}$" (38 m/m). A turnbuckle adjuster with a central spannering point is provided. Insufficient free travel of the clutch pedal can be one of the causes of clutch slip. If clutch slip is experienced at high engine R.P.M., it indicates that there is insufficient pedal clearance.

B. OIL OR GREASE ON FRICTION SURFACES.

The probable causes of oil or grease reaching and contaminating the Thermoid friction facings of the clutch driven plate assembly are:-

PRINTED IN ENGLAND

1. Oil leakage past the sealing washer 'A' Fig.2 at the rear end of the crankshaft.

2. Excessive initial loading of grease into the clutch spigot ball bearing (26 Fig.2) of the flywheel, distinguished by radial grease marks on the friction plate (24).

3. Over zealous application of the foot-operated chassis oil pump or a faulty oil restrictor (Type ZEO), allowing too much oil to reach the clutch release bearing (32 Fig.5) eventually working its way along the splines on to the driven plate.

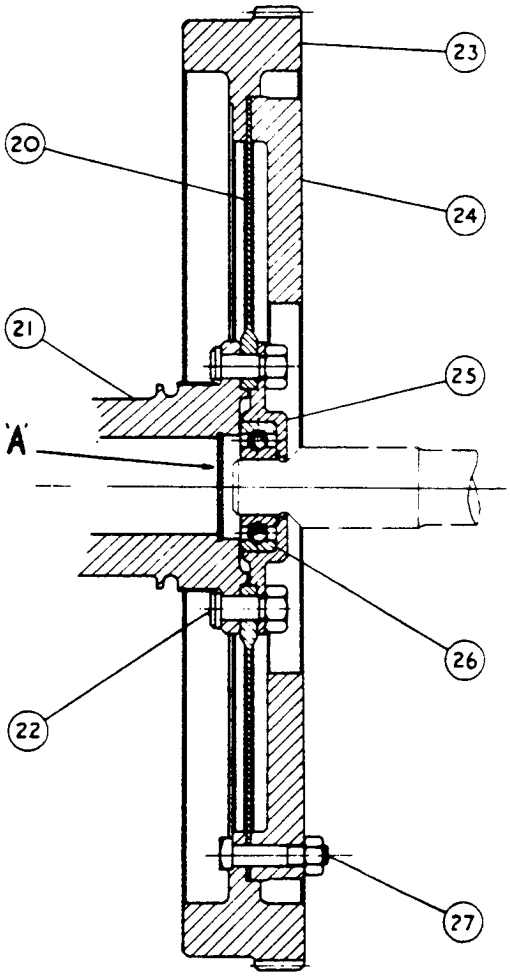

Fig.2. Section through flywheel.

The remedies for the above conditions, i.e. 1,2 and 3, are dealt within the subsequent context.

NOTE: Should it be found necessary to remove the clutch, then if the Thermoid facings of the driven plate assembly are found to be contaminated with oil or grease, a new driven plate assembly should be fitted.

1. Oil Leakage past Sealing Washer:

It has been found on investigation, that under certain conditions there is a possibility of an oil leakage past the sealing washer ('A' Fig.2) at the rear end of the crankshaft. If the leakage is sufficient, oil may reach the front facing of the driven plate. In practice, it is likely that the first indication will be a clutch shudder and then a slipping clutch. If after removal of the clutch, oil, apart from grease, is found to be present in the spigot bearing (26 Fig.2), it can be assumed that it is leaking past the sealing washer.

As a service rectification, a conical synthetic rubber oil sealing plug (Fig.3) has been introduced and is shown in position in the bore of No.7 crankshaft journal in Fig.4. Arrangements are being made for supplies of these plugs to be sent to all Overseas Retailers. Will Retailers in the U.K. kindly note that supplies are available from the London Service Depot.

Whenever there is evidence of oil leakage past the sealing washer, a rubber plug should be fitted as described herein. If however, a rubber plug is not immediately available, then it will be necessary to solder the sealing washer ('A' Fig.2) to the crankshaft as described in Paragraph 1b.

PRINTED IN ENGLAND

1a. To fit the Rubber Plug:

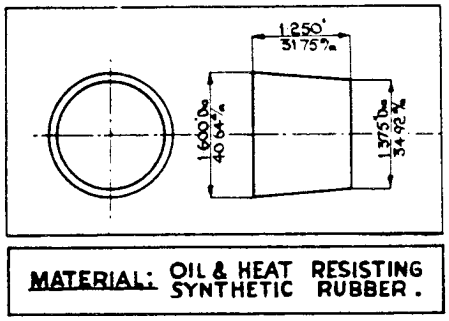

Fig.3. Details of oil sealing plug.

With the clutch removed from the flywheel, remove the crankcase lower half, taking care to try and avoid damaging the Vellumoid joint fitted between the face of the crankcase and the wheelcase. Before fitting the rubber plug, it will be necessary to drill a 1/16"dia.($1\frac{1}{2}$mm) air escape hole in the centre of the existing sealing washer. Prior to drilling, and to prevent any drilling swarf from dropping into the spigot bearing (26 Fig.2), cut a piece of paper about $1\frac{1}{2}$" (38mm) wide, grease it on one side and then fold it in cylindrical form so that the greased side is on the interior, pass it through the spigot bearing and up to the face of the sealing washer. After drilling the washer, remove burrs from hole and then carefully remove the paper tube,together with all traces of swarf which will be found to be trapped on the greased side of the paper.

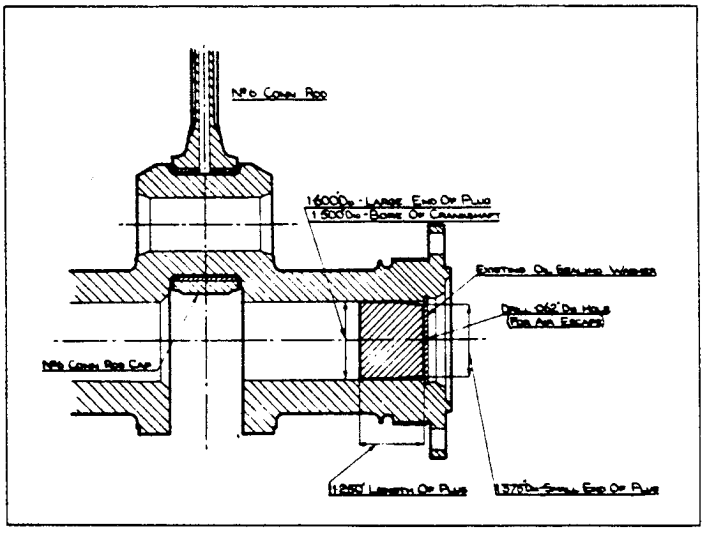

Fig.4. View of synthetic rubber oil sealing plug in position in crankshaft.

Thoroughly clean the bore of No.7 crankshaft journal by syringing it out with petrol. With the small end of the rubber plug pointing towards the existing sealing washer as shown in Fig.4, carefully and squarely insert it into position and push it as far as it can be pushed by hand, then, with the aid of a suitable lever, curved and rounded at one end, (so as not to damage the rubber plug), push the plug still further into position. For the final operation, and in order that the plug can be squarely pushed fully home, a circular distance piece or distance pieces will be required, preferably made from aluminium and which should be a slack fit in the bore of the crankshaft.

After fitting the plug, stamp the letter 'B' with a $\frac{1}{4}$" or 5/16" (6 to 8 mm) stamp, on the near-side of the clutch casing between the two uppermost starter motor retaining bolts, and as near as possible to the front face of the clutch casing.

1b. To solder the Sealing Washer to the Crankshaft:
(Not Recommended but Permissible in Emergency.)

With the clutch removed from the flywheel, remove the crankcase lower half. Remove the nuts from the twelve bolts (22 Fig.2). Providing the nuts have not been over centre punched, it should be possible to use them again. Leaving the flywheel assembly in position on the crankshaft, remove the bearing housing (25) complete with the spigot bearing (26). Remove any surplus oil or grease from the spigot bearing and housing and do not add any additional oil or grease.

Thoroughly clean the bore of No.7 crankshaft journal by syringing it out with petrol and then wipe out with a clean cloth, also clean around the outer periphery of the sealing washer. As the crankshaft is nitride hardened, it is therefore difficult to solder unless very carefully cleaned. When soldering, use a good quality soldering flux i.e. not spirits of salts.

Taking the necessary precautions, apply heat to the washer by means of a small blow lamp or gas flame sufficiently to warm up the washer for soldering purposes. An oxy-acetylene flame must not be used for this purpose, as the heat is too intense and too localised.

Trim up as necessary the ends of the twelve flywheel bolts, providing a suitable die is available, i.e. .375" dia. 20 T.P.I., (R.H.) B.S.F. Clean up the first two or three threads only. It may be necessary to hold the die itself by hand, owing to the limited space between each bolt. Care must be taken when refitting the nuts not to damage the bolts, otherwise it will be necessary to remove No.7 main bearing cap in order to remove the damaged bolt and fit a new one.

Place the housing in position. It should be noted that one of the bolt holes in the housing is off-set for co-relation purposes. Providing the nuts have not been damaged, they can be cleaned up with a suitable tap. Should new nuts be required, the Part No: is K-4010. After thoroughly tightening up the nuts, re-centre punch each bolt in four places to lock the nut.

2. Escape of excess of Grease from the Clutch Spigot Bearing:

If too much grease has been packed into the clutch spigot ball bearings (26 Fig.2) in the flywheel, then it may eventually find its way on to the friction plate (24) of the flywheel with consequent contamination of the front facing of the driven plate. Remove all traces of grease, oil or foreign matter from the flywheel, friction plate and clutch casing. There should not be a repetition of this trouble, as any excess of grease in the spigot bearing will have found its way out. There is no need to remove the spigot bearing for cleaning purposes.

3. Over zealous application of the Foot-Operated Chassis Oil Pump or a faulty Oil Restrictor Type ZEO.

The above will probably allow too much oil to reach the clutch release bearing (32 Fig.5) and eventually find its way on the rear facing of the driven plate assembly. The chassis oil pump should only be operated in accordance with the instructions given in the Owners Handbook i.e."Depress

SB/VA 6/SF 10.3.48 PRINTED IN ENGLAND

pedal once while engine is being started for the first time in the day and subsequently every 100 miles".

If the clutch has been removed for the purpose of fitting a new driven plate assembly, then prior to refitting the gearbox to the clutch casing, ascertain that the oil feed pipe (28 Fig.5) to the oil trough of the clutch trunnion is correctly positioned above the trough. The end of the pipe should be approximately over the front setscrew (i.e. the one nearer to the flywheel) retaining the trough to the trunnion when the clutch release bearing housing (33) is in contact with the adjusting screws of the three clutch release levers. Check that the oil feed hole from trough to the trunnion is clear. With sufficient oil in the foot-operated oil pump, depress the pedal once and count the number of oil drops delivered to the trough of the trunnion.

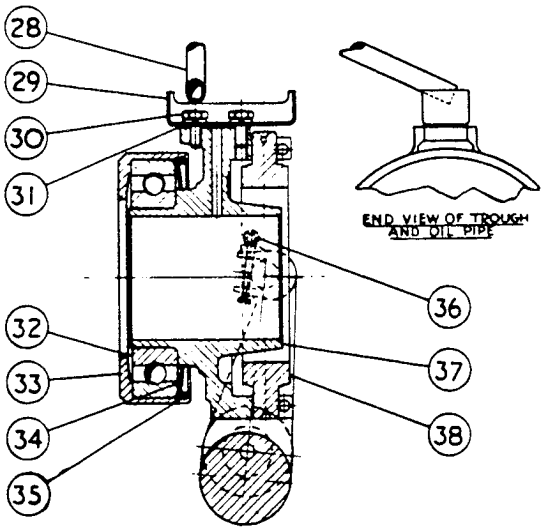

Fig.5. Section through clutch release bearing and trunnion.

Approximately three to five drops should be delivered with each application of the pedal. If either above or below this rate of flow, check the restrictor elbow situated on the right-hand top side of the clutch casing, by replacing with a new one of the same type (ZEO).

If the flow is still to great, then fit a type ZEOO elbow which will give a reduced rate of flow, conversely if there is still insufficient oil delivered, then check for a leakage or pipe breakage at some other point in the centralised chassis lubrication system.

If it is desired to check the oil flow with the gearbox in position, the elbow can be removed from the clutch casing and reconnected to the oil delivery pipe.

NOTE: Oil restrictors cannot be adjusted or dismantled. They are lettered to indicate their shape and numbered to indicate their rate of oil emission. A higher number indicates a greater rate.

PRINTED IN ENGLAND

FOR INFORMATION:

CLUTCH PRESSURE SPRINGS - 10" BORG & BECK CLUTCH.

The attention of Retailers is directed to an alteration in the colour coding of the nine thrust springs on all 10" Borg & Beck replacement units.

Originally ORANGE coloured springs (Part No. R-4209) were used, and these gave a minimum and maximum load figure of 130/140 lbs. for each spring at the correct assembled length of 1.562".

The latest type springs are coloured RED and give a minimum and maximum load figure of 150/155 lbs. for each spring at the same assembled length. The part number of the new spring is R-4210.

The above alteration affects only those chassis fitted with the 10" Borg & Beck clutch, i.e. all chassis prior to the introduction of the 11" C.F. clutch at B-2-HR.

It should be noted that this increase in thrust spring poundage in no way alters the instructions covering the assembly, adjustment and general maintenance of the clutch laid down in the Workshop Manual.

CLUTCH PEDAL.

A pressed cup and rubber washer are fitted on the pedal shank immediately under the pedal pad.

The purpose of this cup is to act as a stop for downward travel, but it is prone to work loose and rattle, and since the carpet, in any case, provides an adequate stop, the cup may be removed.

REFACING THE FLYWHEEL FRICTION PLATE AND CLUTCH PRESSURE PLATE.

It is permissible to regrind the surface of both the flywheel friction plate and the clutch pressure plate should they show signs of scoring. Only the minimum amount of metal necessary to provide a clean, smooth surface should be removed. Grinding limits and original dimensions are given in Fig.1.

Flywheel Friction Plate

Dimension 'A'	.800" (20.32 m/m)
Grinding Limit	.050" (1.27 m/m)

Clutch Pressure Plate

Dimension 'B'	
10" Clutch	1.284" (32.61 m/m)
11" Clutch (Light and Heavy)	1.286" (32.66 m/m)
Grinding Limit	.030" (.76 m/m)

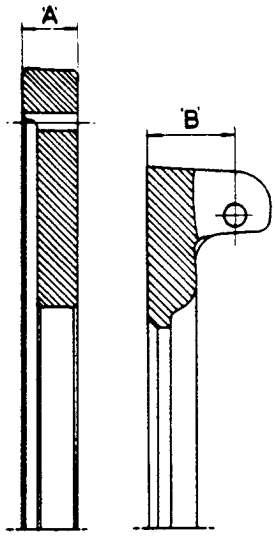

FIG.1 FLYWHEEL AND PRESSURE PLATE - ORIGINAL DIMENSIONS.

A surface grinder should be used and a Carborundum stone of grade BA80-N5-VBLU is recommended. The clutch pressure plate may be placed face downwards on the machine table and the backs of the lugs for the toggle levers lightly ground flat to provide a true surface. The plate may then be reversed and the face ground as required.

A flywheel friction plate that shows any sign of small, hair-line, contraction cracks should be discarded.

FOR INFORMATION.

CLUTCHES.

The increased cost of producing service parts for the special 11" lightweight clutch assembly is exhorbitant in comparison with the cost of the normal heavyweight parts. Consequently all 11" lightweight assemblies returned for replacement will now be automatically exchanged for 11" heavyweight assemblies, which incorporate several technical improvements over the former lightweight unit.

Under normal circumstances a new friction plate will usually be required as there is a maximum reface grinding limit of only 0.010".

The Service Exchange heavyweight parts, which will be supplied in exchange for lightweight units returned, are as follows -

Heavyweight Parts	Part Nos.		Lightweight Part Nos.
Friction plate	GB. 5291	supplied	RE. 10695
Centre plate	RG. 7068	in	RG. 7348
Cover Assembly	RG. 7069 or RE. 17585	) exchange) for	RG. 7071

SERVICE Bulletin No. BB-244

MODEL: BENTLEY MARK VI

IMPROVED CLUTCH CENTRE PLATE - RH.7199

With the introduction of the improved clutch centre plate (RH.7199), it has become necessary to revise the settings for the release lever height adjustment and the pedal free travel measurement.

The revised settings are as follows:-

Release lever height adjustment :	2.155 in.
Pedal free travel measurement ; (With the pedal set in the centre notch position):	1.500 in.

For the necessary instructions on adjustment of these settings refer to the Service Handbook.

ALL COMMUNICATIONS SHOULD BE ADDRESSED TO
BENTLEY MOTORS (1931) LTD., PYM'S LANE, CREWE, ENGLAND

RS/CB 17.4.1961 PRINTED IN ENGLAND SECTION F.

COLUMN GEAR CHANGE

(LEFT-HAND DRIVE CARS)

FOR INFORMATION:

An alteration to the column gear change mechanism has been introduced replacing the early type gear change cross tube assemblies (2 off) and the gear change pull rod assembly by two new cross tube assemblies and one pull rod assembly having keyhole type sockets.

The new parts were incorporated on Chassis No.B-281-LGT and all subsequent left-hand drive cars.

It is proposed to incorporate all the parts detailed below if any one or more of the original parts require renewal.

The two change gear cross tubes are connected at one end to the ball pins of the outer lever (on left-hand side of gearbox) attached to the horizontal selector lever shaft of the gearbox. The other ends of the cross tubes are connected to the upper and lower ball pins of the gear change bellcrank lever. The pull rod is connected at its lower end to a third ball pin of the same bellcrank lever - the upper end being connected to the lever fitted at the lower end of the gear change tube attached to the steering column. The ball joints of the cross tubes and pull rod are the only ones fitted with a rubber dust cover and therefore can easily be recognised.

1.

PARTS REQUIRED	NO. OFF.	TITLE.	REPLACING.
RG-6765	2	Gear Change cross tube assembly.	(2 Off RG-5770)
RG-6768	5	Rubber Dust cover-ball joint.	(5 Off RG-5768)
RG-6769	5	Adjusting Plug - ball joint housing.	5 " RG-5767)
RG-6770	5	Contact Piece-ball joint housing.	(5 off RG-5762)
RG-6773	1	Pull rod,assembly-steering column to bellcrank lever.	(1 off RG-5750)
RG-6953	1	Support stay-steering col. to lever	(1 off RG-5774)

NOTE: It can be ascertained from beneath the car whether this alteration is incorporated by reference to one of the five threaded adjusting plugs fitted to the end of each of the five ball joint housings. On the early type, the adjusting plug is provided with a slot for adjustment by means of a screwdriver, whereas,on the later type, the adjusting plug (RG-6769) is hexagon headed, for adjustment by means of a spanner.

2. TO REMOVE THE EXISTING TWO CHANGE GEAR CROSS TUBES & PULL ROD:

NOTE: It is not necessary to remove the floorboards for this work:-

(i) Remove the left-hand side undersheets.

(ii) Remove the pin connecting the upper ends of the two support stays to the strap of the lower bearing housing of the steering column. Remove the pin from the lower end of the stays and remove the stays. Match up the new support stay (RG-6953) to one of the original stays and fit - the new stay being fitted to the left-hand side of the car.

(iii) To remove the cross tubes, first slacken back the locknut at the end of a joint and with a small screwdriver, unscrew the adjusting plug - the joint will then come adrift. Repeat for the remaining three joints and the joint at the lower end of the pull rod.

(iv) Remove the screw from the fork at the upper end of the pull rod and remove the rod. Measure the distance between the screw hole in the fork and the centre of the ball joint housing at lower end of the rod and take note.

(v) Transfer the fork, the two lock nuts and the spring washer from the old pull rod to the new one and adjust the fork (centres) to the dimension previously noted and lock the fork.

3. TO FIT THE NEW CROSS TUBES AND PULL ROD:

(i) Place a contact piece (RG-6770), the correct way round into each of the five sockets and fit a new rubber dust cover (RG-6768) in position on each ball joint before fitting the cross tubes and pull rod to the car.

(ii) Lightly grease each ball pin and fit cross tubes and pull rod to car. Each ball joint should be adjusted as follows:-

a) First transfer the lock nuts from the old adjusting plugs to the new ones.

b) Screw the hexagon headed adjusting plug up to the ball pin and lock. Each ball joint should be free without end float i.e. the cross tubes should be slightly stiff to rotate.

(iii) The final operation is to check the angular position of the change gear lever (i.e. the lever beneath the steering wheel). With the front wheels in the straight ahead position, the lever should, when in the neutral position, be at right angles to the vertical spoke of the steering wheel, i.e. the lever should be horizontal. In the event of adjustment being required, this can be achieved by either lowering or raising the fork on the pull rod with the change gear lever in the neutral position.

Will all Retailers please notify the London Service Station of the Chassis Number of the car, whenever they incorporate this alteration.

FOR INFORMATION:

THE AUTOMATIC GEARBOX

All owners of cars fitted with the Automatic Gearbox have been advised that it is most important to have the gearbox brake band adjustment checked after the first 1,000 miles of initial running.

The following is the correct procedure for checking and adjusting the front and rear brake bands.

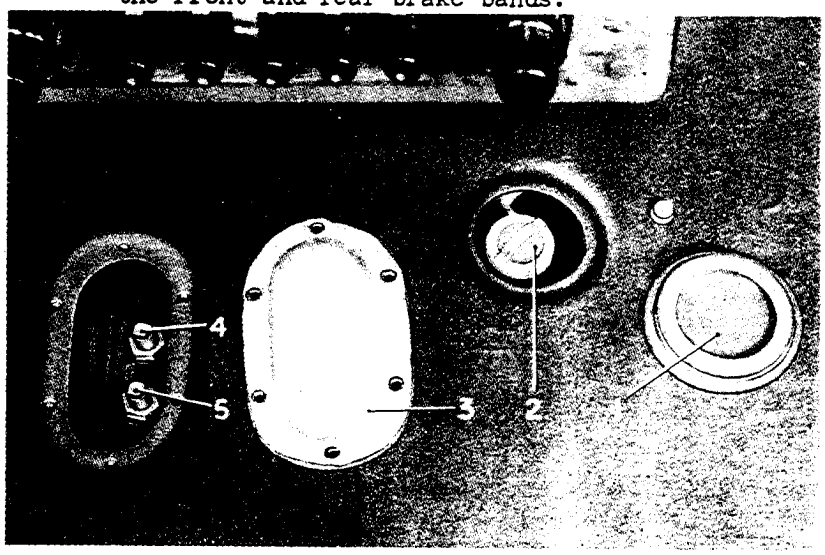

1. Dipstick cover.
2. Dipstick.
3. Cover, brake band adjusters.
4. Front band adjuster.
5. Rear band adjuster.

FIG. 1. ACCESS POINTS IN FLOOR.

Preparation:

(i) Remove the carpet from the front interior floor to expose access cover over band adjuster screws. Remove the cover, see Fig. 1.

(ii) Drive car over pit, or elevate on hoist.

(iii) Thoroughly clean the underside of the gearbox sump around the drain plug, sump joint and the oil pipe connection on the ride control pump, see Fig. 2.

Remove the sump drain plug and drain the fluid into a pan, approx. 10 imp. pints, or 12 U.S. pints, should drain from the sump.

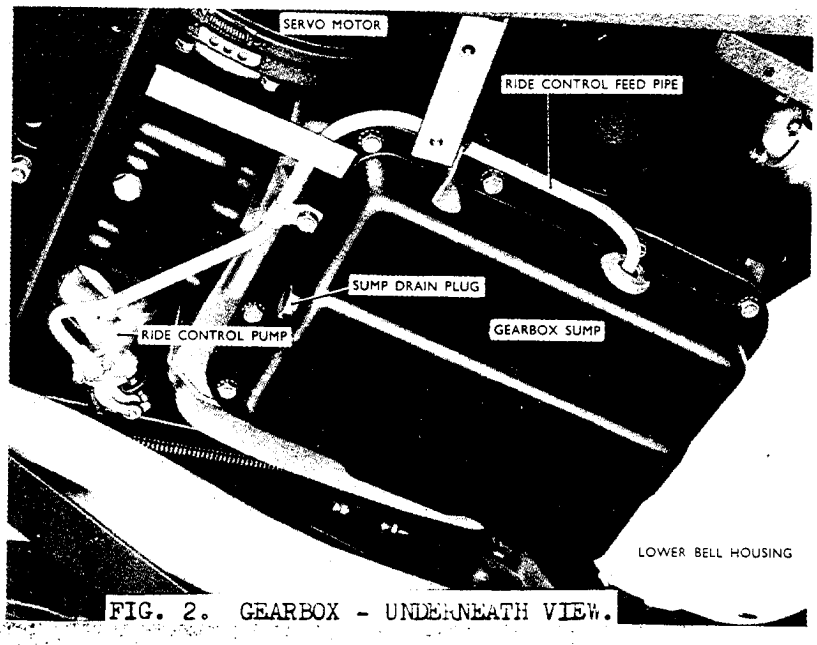

FIG. 2. GEARBOX - UNDERNEATH VIEW.

SB/VK. 1/JSK.....3.11.52.

G.

(iv) Remove the two bolts securing the ride control feed pipe to the ride control pump, see Fig. 2.

Unscrew the twelve securing bolts and remove the sump and sealing joint, taking care not to damage the ride control feed pipe.

Extreme care must be taken to prevent any dirt, dust or lint, etc., from entering the internal portion of the gear-box. Tools and equipment must be perfectly clean.

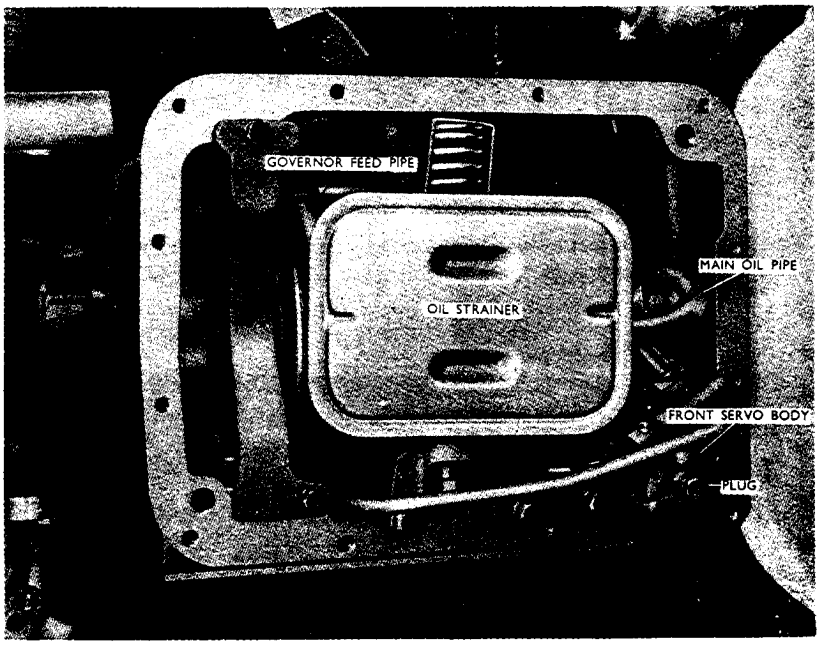

FIG. 3. GEARBOX - SUMP REMOVED.

(v) Remove the oil strainer, Fig. 3, by pulling the rear end of the strainer down slightly, off the governor feed pipe, and then, sliding bodily rearwards off the main oil pipe.

(vi) Slacken off the locknuts securing the two band adjusting screws.

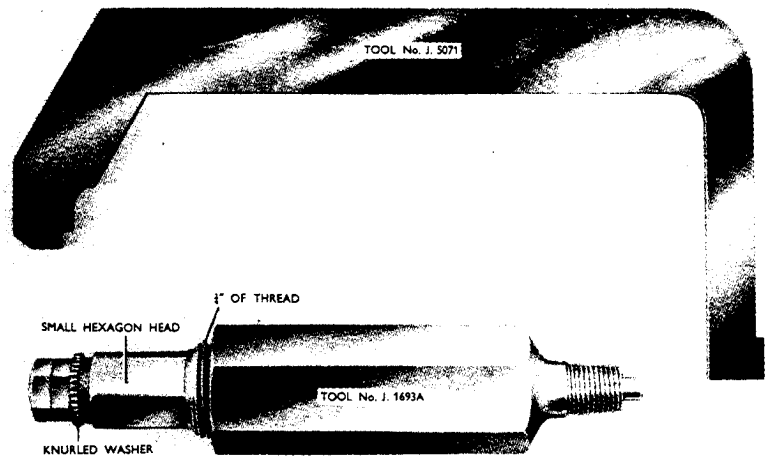

FIG. 4. GAUGES.

Adjusting the Front Band.

(i) Ensure that the front band is centred on the drum and that the band anchor is seated properly on the adjusting screw.

(ii) Remove plug from front servo body. Adjust Gauge GM.No. J.1693A, Figs. 4&5, by loosening the small hexagon head until approximately ¼" of thread is exposed above the gauge body, and screw the gauge, by hand only, into the plug hole.

(iii) Tighten the small hexagon head of the tool, with the fingers, until the stem of the gauge is just felt to contact the front servo piston. Then, using a wrench, continue tightening the small hexagon head 5½ turns.

(iv) From the top of the gearbox, tighten the front band adjusting screw, Fig. 1, until the knurled washer on the top of the gauge is just free to turn by hand.

(v) Hold band adjusting screw and securely tighten its locknut.

(vi) Loosen the gauge adjusting hexagon, 6 full turns, and remove. Replace and tighten servo cover plug.

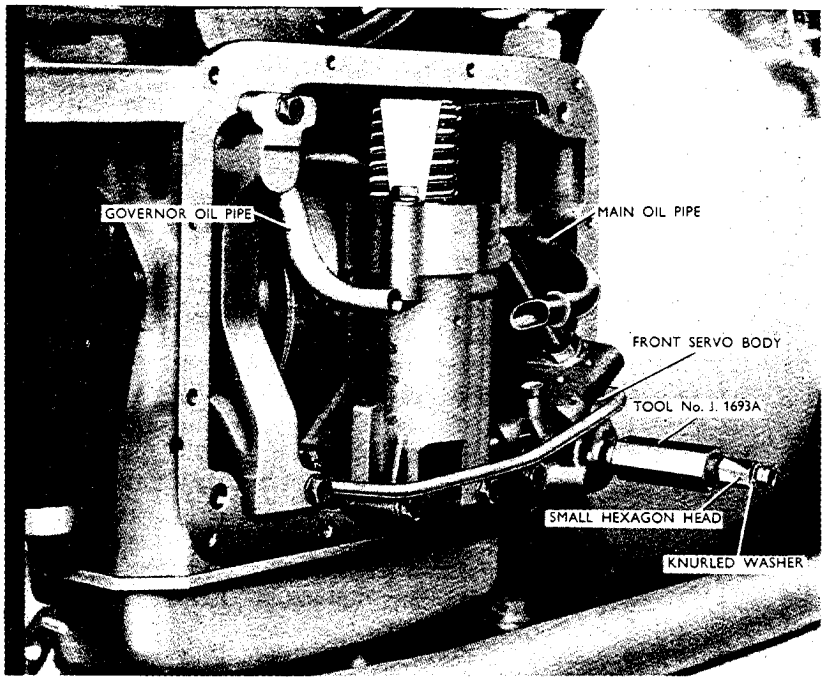

FIG. 5. FRONT SERVO - GAUGE IN POSITION.

Adjusting the Rear Band:

(i) Place the rear band adjusting Gauge GM.No.J.5071, Figs. 4 & 6, so that the small notch in the short end, rests on the corner of the machined face at the spring end of the rear servo body, and the tip of the long end rests along the servo piston rod.

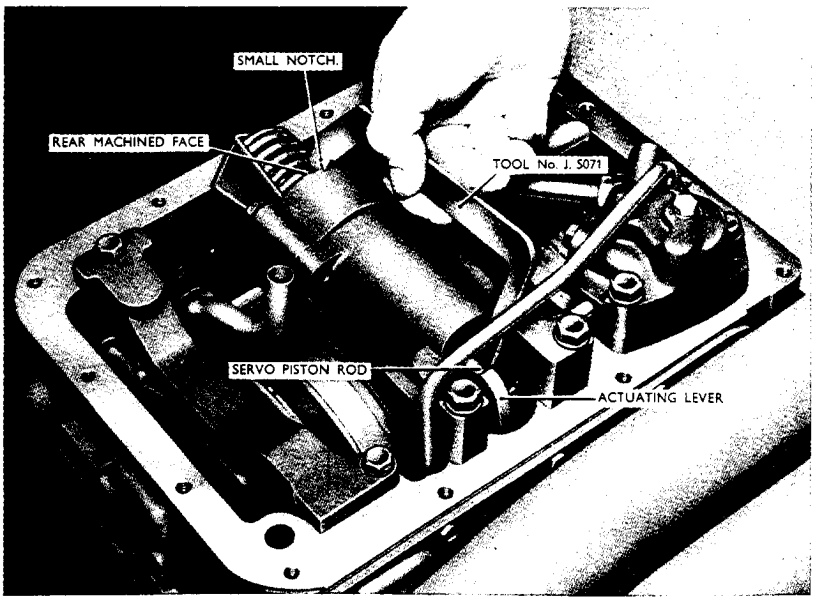

FIG. 6. REAR SERVO - GAUGE IN POSITION.

(ii) From the top of the gearbox, tighten the rear band adjusting screw, Fig.1, until the actuating lever just contacts the face of the gauge.

Do not overrun this adjustment, if necessary, loosen the rear adjusting screw two or three turns and repeat the adjustment.

(iii) Hold the band adjusting screw and securely tighten the locknut. Afterwards, recheck with the gauge that the adjustment is correct.

Re-Assembly:

(i) Replace the oil strainer, sliding it first on to the main oil pipe and then firmly positioning the governor feed pipe, in the hole in the top of the strainer.

(ii.) Replace the sump using a new sealing gasket, and check that the ride control feed pipe registers approximately on the boss of the pump. Replace and securely tighten sump drain plug and reconnect feed pipe taking care that it is seating properly when bolts are tightened.

(iii) Replace the cover in the front floor over the adjusting screws, having made sure that the adjusting screw locknuts are securely tightened.

(iv) Refill the gearbox with a recommended transmission fluid.

(a) Add 8 imp. pints (10 U.S. pints) of transmission fluid through the dipstick filling orifice.

(b) Run the engine with the hand control lever at "N" (Neutral) and the hand brake on, for approximately three minutes, at a fast idle, equivalent to about 20 miles per hour.

(c) Reduce engine speed to a slow idle, check the fluid level with the dipstick. With the engine still running, add fluid to bring the level up to the "Full" marking on the dipstick.

Do not overfill; if necessary, drain off to correct level.

(v) Run engine for a few minutes and examine that all seals and joints are oiltight.

(vi) Replace front floor carpet.

FOR INFORMATION:

THE AUTOMATIC GEARBOX

Addendum to BB.151.

When carrying out the 1,000 miles band adjustment, the following notes will be of assistance to service personnel.

Adjusting the Front Band:

When centralising the front band on the drum to ensure that it is seating properly, considerable variation can occur, if the band is centralised by hand.

The correct method is as follows:-

1. Insert screwdriver and operate the lever to apply the band to the drum several times before screwing up the gauge adjusting hexagon. The bands should be allowed to spring back sharply on the servo piston stem, care being taken not to move the band accidentally after this operation.

   This method closely imitates the action of the front band when in operation.

2. Smoother gear changes are obtained by setting the front gauge just to release the knurled washer at 5 turns, instead of $5\frac{1}{2}$ turns as stated in the Bulletin.

Ride Control Pump:

To ensure satisfactory operation of the ride control pump after the above service,

1. Jack up the rear wheels, and remove the blanking plug from the front end of the four-way union, mounted on the chassis crossmember, to which is connected the flexible pipe (outlet pipe) from the ride control pump.

2. Start the engine and run at idling speed. Engage Range 4 and move the steering column ride control lever to "Hard".

3. When a steady stream of oil emerges from the union, stop engine and replace plug.

   Check oil level in gearbox.

FOR INFORMATION:

AUTOMATIC GEARBOX

THROTTLE AND GEAR CONTROL LINKAGE SETTINGS

Information is given under, of the complete "Factory" settings of the control linkages to enable Retailers to check all or part of these settings as may be necessary. It should be noted that the final check should be made while the car is on road test.

The gear control linkage should be set first, so that the trapeze which also carries the throttle linkage is correctly positioned. Rod lengths quoted are ball joint or clevis pin centre to centre distance.

(i) Disconnect rod "J".

(ii) Adjust the two horizontal gear control rods to equal lengths such that the trapeze is at right angles to the steering column. Note this length.

(iii) With the gear lever in the "3" position, and the manual lever on the gearbox in the "3" detent position (i.e., second detent back from the forward stop), adjust the vertical gear control rod to suit by means of the jaw at its upper end. Check the other gear lever positions.

(iv) Set rod "A" equal in length to the two horizontal gear control rods.

(v) Set rod "B" to 2.875".

(vi) Set rod "C" to 4.5".

(vii) With pin "D" held 1.750" from the face of the dash, set lever "E" to lie approximately 2° below the horizontal by slackening the pinch-bolt on lever "F" and rotating lever "E" with its shaft to the desired position.

(viii) With the carburetter butterfly fully closed (idling screw set back and fast idle cam out of action) adjust rod "G" to maintain the 1.750" gauge distance from pin "D" to the face of the dash.

(ix) Holding rod "A" forwards, so that lever "H" is on its off-stop, adjust rod "I" to suit.

(x) Move the linkage towards its full throttle position, and check that when lever "H" reaches its on-stop, the carburetter butterfly also just contacts its on-stop. If not, alter the linkage ratio slightly by slackening the pinch-bolt on lever "F", rotating lever "E" further below the horizontal, and lengthening rod "G" to maintain the 1.750" gauge distance from pin "D" to the face of the dash.

(xi) Set the carburetter idling screw to give 400 r.p.m. hot.

(xii) Starting with the accelerator pedal in the fully closed position under the influence of its pull-off spring, adjust rod "J" so that the pedal is just slightly depressed from this position. Set stop "K" to contact the pedal in the full throttle position.

(xiii) Check the gearbox operation on the road. On a level road with the transmission warm, changes from 1 to 2, 2 to 3, and 3 to 4 should occur at 5-7, 10-13, and 19-22 m.p.h. respectively when using the minimum throttle opening necessary just to accelerate the car gradually from rest.

Should the changes occur above these speeds, shorten rod "A" slightly. Check the behaviour when making part throttle starts from rest. If the changes occur with an excessive amount of slip (particularly the 2 to 3 change) or if kick-down changes at full throttle are unobtainable, correct by lengthening rod "A" slightly.

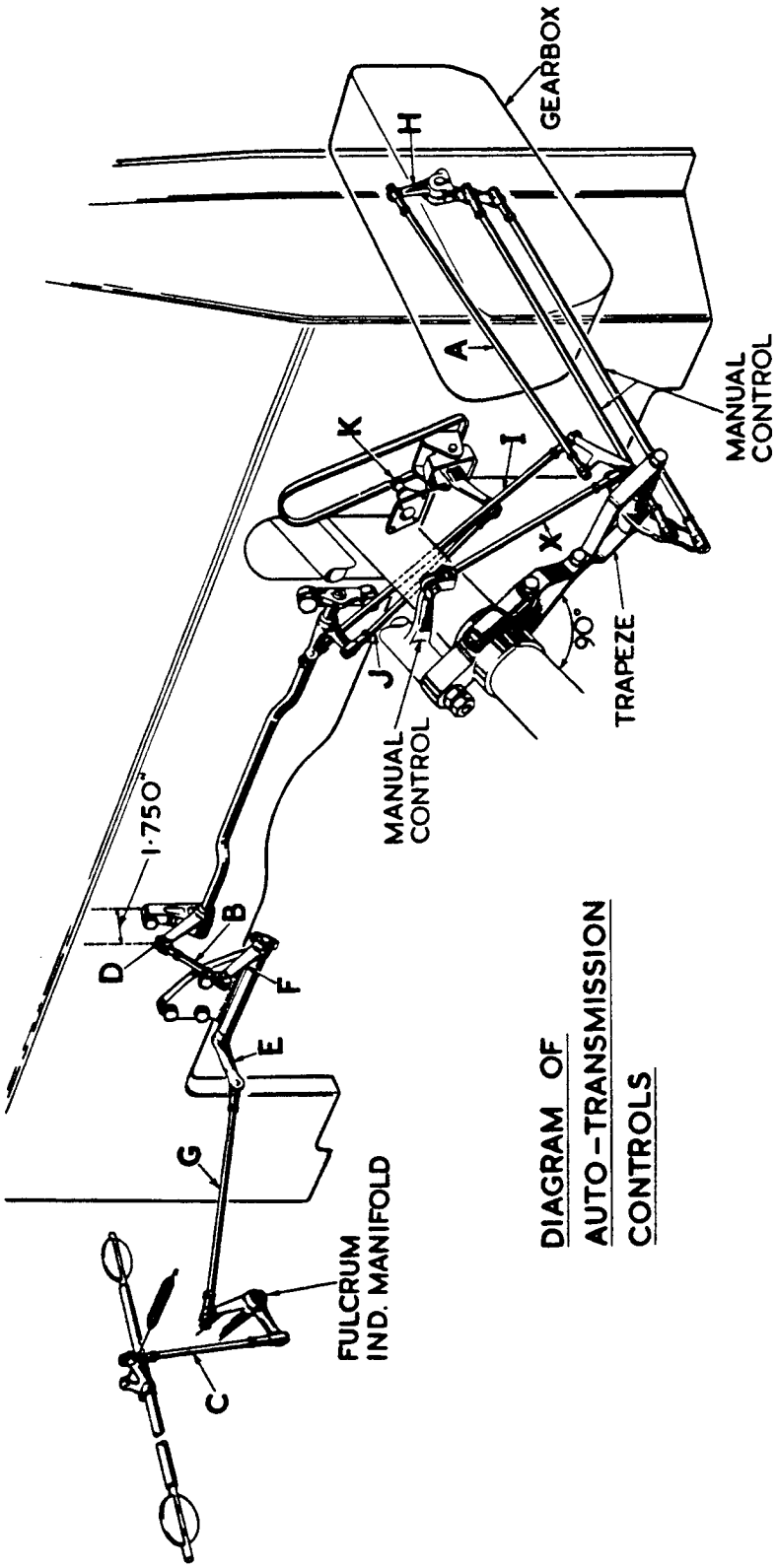

DIAGRAM OF AUTO-TRANSMISSION CONTROLS

PRINTED IN ENGLAND

FOR INFORMATION:

AUTOMATIC GEARBOX

COASTING OR TOWING

Owners have been advised that coasting or "freewheeling" down hills with the engine switched off must definitely be avoided, as this is likely to cause severe damage to the Automatic Gearbox mechanism. This damage can occur with the manual control lever in any of the five positions, including position "N".

The reason for this warning is that when the engine is switched off, the front oil pump becomes inoperative, lubrication is reduced, and the rear servo brake band applied.

Under these circumstances, the application of the rear band causes excessive over-driving of the front unit clutch plates when the car begins to move, with the probability that these clutch plates will burn out, necessitating a major gearbox overhaul.

Similarly, if, in the event of an accident, it should become necessary to tow a car fitted with the Automatic Gearbox, the following precautions must be observed before the car is moved.

(i) Make certain that the gearbox was operating satisfactorily until the time of towing. If there is any sign of mechanical failure or breakage in the gearbox, the car must be transported.

(ii) Release the lock nut and slacken off the rear band adjusting screw $4\frac{1}{2}$ complete turns. Re-tighten the lock nut.

(iii) Keep the control lever in "N" throughout and maintain, where possible, a towing speed between 15 and 25 miles per hour. Distances must at all times be kept to a minimum.

IMPORTANT:

At no time must a speed of 25 miles per hour be exceeded whilst towing.

Towing new cars or cars with new gearboxes, which have covered less than 1,000 miles in service, must be avoided.

FOR INFORMATION:

AUTOMATIC GEARBOX

This Bulletin is issued as advance information on the general operation of the Automatic Gearbox, and whilst not a complete write-up, the information will be found to be of assistance to those who have not previously had experience of this type of transmission.

GENERAL:

The Automatic Gearbox consists of three epicyclic gear trains providing four forward gear ratios and one reverse rati . Fluid transmission replaces the usual plate clutch as this is necessary to smooth out disconcerting jerks when the changes of gear take place. No clutch pedal is therefore necessary.

The gear change is effected automatically by the Control valve unit, operated by oil pressure, and the road speeds at which the gear changes occur, vary cording to the demand for power from the accelerator pedal - that is, heavy pressure on the pedal delays the up-change from low to high gears.

AUTOMATIC GEAR SELECTION:

Control is achieved by means of the following main hydraulically operated units.

1. Control valve unit.
2. Governor unit.
3. Front and rear pumps.
4. Front and rear servos.
5. Front and rear clutch pistons.
6. Reverse cone piston.

The two oil pumps provide the operating pressure necessary for control of the units in the gearbox which effect automatic operation. The front pump is of the variable delivery type and adjusts itself automatically to the requisite pressure output. It is driven by the crankshaft and therefore operates at engine speed and only when the engine is running. The main duties of the front pump are.-

1. To provide main oil pressure in the control valve unit for operation of the servos and the clutches.

2. To supply boosted pressure when required.

3. To maintain pressure in the fluid coupling.

4. To provide an adequate lubrication supply to all moving parts.

The rear pump is of the eccentric gear type, and is mounted with the governor on a shaft driven from the output shaft of the gearbox Oil delivery from this pump is therefore always proportional to the road speed of the car.

Oil from the rear pump is fed to the governor and creates a resistance to balance the centrifugal force tending to throw out the governor weights. From the governor valve, oil is fed to the three shift valves in the control valve unit which are kept closed by springs. These shift valves are those which control the delivery of oil to the servos and clutches which give reduction and direct drive in the epicyclic units and each operates one shift, that is 1st to 2nd gear, 2nd to 3rd, 3rd to 4th, and vice versa.

For example, in second gear, the front clutch is applied. front band released, rear clutch released and rear band applied. When the road speed increases to a pre-determined speed, the pressure from the governor is enough to overcome the spring acting against the 2/3 shift valve, which will then move across and:-

(i) Release the front unit clutch-pressure applied to the front clutch unit.

(ii) Apply the front servo band.

(iii) Apply the rear clutch.

(iv) Apply a pressure against the rear servo piston to overcome the pressure spring, thus releasing the band. This engages 3rd gear.

Control by this means would give up-shift and down-shift always at the same vehicle speed, but in order to delay the shifts when high acceleration is required, the accelerator pedal is linked to a valve (throttle valve) in the control valve unit. By pressing down on the accelerator pedal against this valve, main oil pressure is allowed to modulate against governor oil pressure by means of a regulator valve incorporated in each of the three shift valves.

This regulating pressure has the effect of increasing the strength of the shift valve springs, and therefore with heavy pedal, road speed must be greater to obtain the increased governor pressure necessary to overcome the shift valves. Thus if the driver wants quick acceleration and puts his foot down, the excess use of the accelerator in relation to the speed of the car gives up-shift at a higher road speed,

giving better acceleration by the use of lower gears. For example, up-shift from 3rd to 4th gear can take place at any speed between 20 and 65 m.p.h. depending on the performance required. Approximate up shift ranges are:-

Up-Shift	Light Throttle	Full Throttle
1st - 2nd	6 m.p.h.	25 m.p.h.
2nd - 3rd	11 "	45 "
3rd - 4th	20 "	65 "

Extreme pressure on the accelerator pedal also actuates a plug operating together with the throttle valve which gives forced down-shift for "kick-down" when required. Pressure from the throttle valve also acts proportionately against a compensator valve which feeds boosted pressure to the brake band servos and clutch pistons as engine speed increases, thus giving increased pressure to compensate for additional engine torque.

The manual valve is a simple valve connected to the lever on the steering column which closes or opens passages in the control valve unit to obtain the conditions required in N. 4. 3. 2. and R. positions.

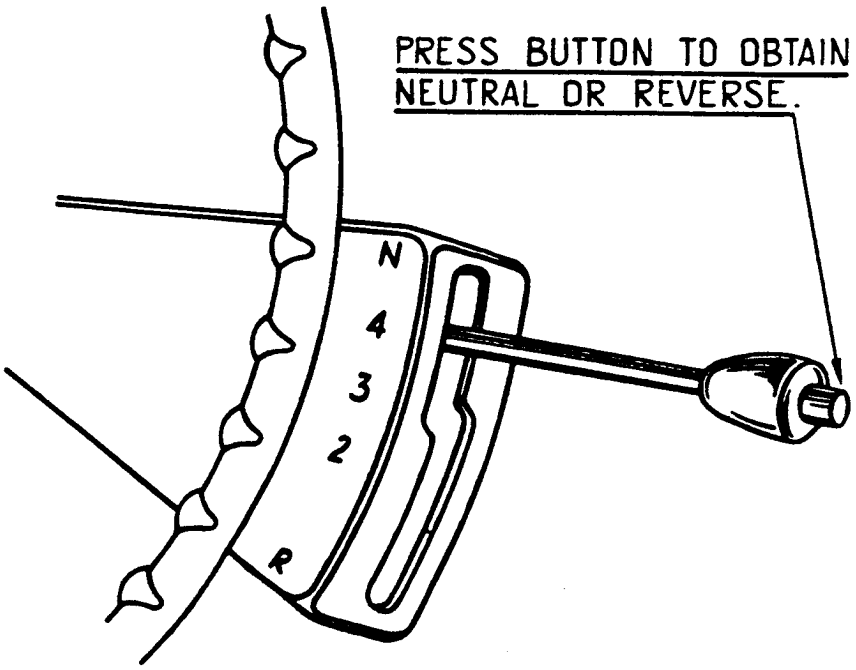

FIG 1. MANUAL CONTROL - GEAR RATIO SELECTOR LEVER.

MANUAL CONTROL:

A 5-position lever is mounted on the steering column in a quadrant and operates in one plane, parallel with the steering wheel. The five positions, reading downwards, are marked, N. 4. 3. 2. R. (See Fig.1.) N. and R. are respectively Neutral and Reverse and can only be engaged and disengaged by depressing the small push-in button in the end of the lever. A gate is provided between 3 and 2 positions to prevent accidental downshift.

Use of position 3 cuts out top gear, and if this is engaged while the car is moving at high speed, downshift from 4th to 3rd gear is automatically delayed until the car slows to a safe 3rd gear speed of 65 miles per hour.

Position 2 is supplied mainly to satisfy Bye-Laws of such American States wherein descent of certain hills must be made in 2nd gear. In this position, 4th and 3rd gears are cut out, but again downshift is automatically delayed until a safe 2nd gear speed of 40 miles per hour is reached. When position 2 is used from rest, the car moves off in 2nd gear and 1st gear can only be engaged by "kicking down" as described later.

DRIVING:

To start the car, the manual selector lever must be placed in the N. or Neutral position. A micro-switch in the circuit to the starter makes starting only possible in this position.

Starting the engine operates the front pump which builds up the requisite hydraulic pressure in the circuits. When starting therefore it is necessary to run the engine a moment or two before engaging the drive, and this allows the oil pressure to build up. For normal driving, position 4 should be selected, and the engine will idle without forward motion of the car until the accelerator is depressed. However, since in this condition the fluid coupling is "slipping off" the engine revs, heat will be generated and the car should not be allowed to idle for long periods in any of the three drive positions. For driving in traffic, it is advisable to use position 3 since, at light acceleration, up-shift from 3rd to 4th gear can occur at 20 miles per hour, and use of this position will prevent hunting between 3rd and 4th gear and the subsequent wear on the gearbox units. Position 3 should also be used when driving in very hilly country.

Forced down-shifts or "kick-down' can be effected in No's. 4. 3. and 2. positions by pushing the accelerator right down into the floor until a light resistance is felt at the bottom of the travel. Down-shift will then occur provided only that the speed of the car is low enough to prevent damage to the engine, and this is automatically controlled by the "control valve unit". 4th to 3rd gear "kick down" is possible at speeds lower than 65 miles per hour, 3rd to 2nd "kick-down" at lower than 40 miles per hour, and 2nd to 1st "kick-down" at lower than 20 miles per hour. The 'R' position can be engaged at a forward speed lower than 10 miles per hour. This enables the car to be rocked out of gullies, snow, etc. by alternate use of positions 2. and R.

NOTE: The use of the phrase "position 4", "position 3" etc., should not be confused with the phrase "4th gear" "3rd gear" etc. As previously stated "position 4" etc. refers to the selected position of the manual change lever, and for instance, in "position 4" of the manual selector lever, 1st, 2nd, 3rd and 4th gear all normally operate in sequence.

A positive parking lock is provided when the car is stationary by selecting 'R' position when, as soon as the engine stops, a pawl drops into dogs on the periphery of the reverse epicyclic unit. Re-starting the engine automatically disengages this pawl. (Note that this only occurs when 'R' has been selected.)

THE GEAR SYSTEM:

Figure 2 is a diagrammatic section drawing showing the rough layout of the Automatic Gearbox.

Front and rear epicyclic units combine to give the forward gear ratios mentioned earlier. The reverse epicyclic unit is effective only in position 'R' in which all three epicyclic units operate in reduction.

The epicyclic gear units can be compared in operation to a plain roller bearing. The main gear assemblies are:-

(i) A sun gear (similar to the roller bearing inner race) meshing with planet gears.

(ii) Three or four planet gears (similar to the rollers) meshing with the sun gear and the internal gear, and carried in a planet carrier (similar to the cage).

(iii) An internal gear (similar to the outer race) meshing with the planet gears.

The output is taken off the planet carriers which rotate concentrically about the sun gear, and it is possible to obtain two gear ratios from one unit - direct drive and reduction. By locking together any two of the above three gear assemblies, this prevents any of the gears revolving in relation to each other, and direct drive is obtained. This is accomplished by use of multiple clutch plates in the epicyclic units which are engaged by means of a piston operated by oil pressure.

Reduction is effected by holding any one of the three above gear assemblies stationary in relation to the frame. This is achieved by means of band-brakes so arranged that they are self energising on drums attached to either the internal or the sun gears of the units. The bands are applied by servos operated by springs and oil pressure. Note that in any unit the band-brake and clutch are applied alternately, i.e. they must not be applied together otherwise engine stalling of failure of some part must occur.

	FRONT UNIT			REAR UNIT			
	Condition	Band	Clutch	Condition	Band	Clutch	Reverse Unit
1st Gear	REDUCTION	ON	OFF	REDUCTION	ON	OFF	IDLE
2nd Gear	DIRECT	OFF	ON	REDUCTION	ON	OFF	IDLE
3rd Gear	REDUCTION	ON	OFF	DIRECT	OFF	ON	IDLE
4th Gear	DIRECT	OFF	ON	DIRECT	OFF	ON	IDLE
Reverse Gear	REDUCTION	ON	OFF	COMPOUND REDUCTION	OFF	OFF	REDUCTION

1st GEAR:

Note that the engine speed is reduced by the front epicyclic unit before its power passes through the fluid coupling. Then the rearward torus transmits power to the forward torus, thence back through the rear epicyclic unit which is also in reduction.

2nd GEAR:

Operation is similar to 1st gear only expected that the front epicyclic unit is changed from reduction to direct drive by releasing the front band-brake and applying the clutch.

3rd GEAR:

In both 3rd and 4th gear, the rear unit is in direct drive. This is effected by locking together (by the rear clutch) the rear unit brake drum (or internal gear) to an extension of the front unit planet carrier which drives the driving torus of the fluid coupling. Since at upwards of 1,000 r.p.m. there is virtually no fluid coupling slippage, this means that the rear unit sun gear is rotating at the same speed as the internal gear, giving direct drive. Owing to the difference in the radial distance from the transmission centre line of the teeth of the rear unit sun and internal gears, more power is transmitted via the extension from the front unit planet carrier (or rear internal gear) than via the sun gear - the ratio is 60% : 40%.

This 3rd and 4th gear arrangement which mostly by-passes the fluid coupling, is often termed Split Torque and makes possible a very high transmission efficiency in comparison to other systems making use of fluid couplings.

4th GEAR:

In this gear both front and rear epicyclic units are in direct drive, so that with Split Torque, virtually a straight through mechanical drive is achieved in 4th gear.

REVERSE GEAR:

This gear operates only in reduction, therefore no clutch is carried in the reverse epicyclic unit. Owing to the high torque through the combined reduction of the three epicyclic units, a band-brake was found to be insufficient and a double acting cone clutch engaged by a piston operated by oil pressure takes its place. Reverse direction is achieved by compound reduction of the rear epicyclic unit where none of the gears is held. This allows the rear internal gear to idle backwards about the planet gears, and the backwards rotation is transmitted via the reverse drive flange to the reverse unit sun gear.

MODEL: BENTLEY MARK VI

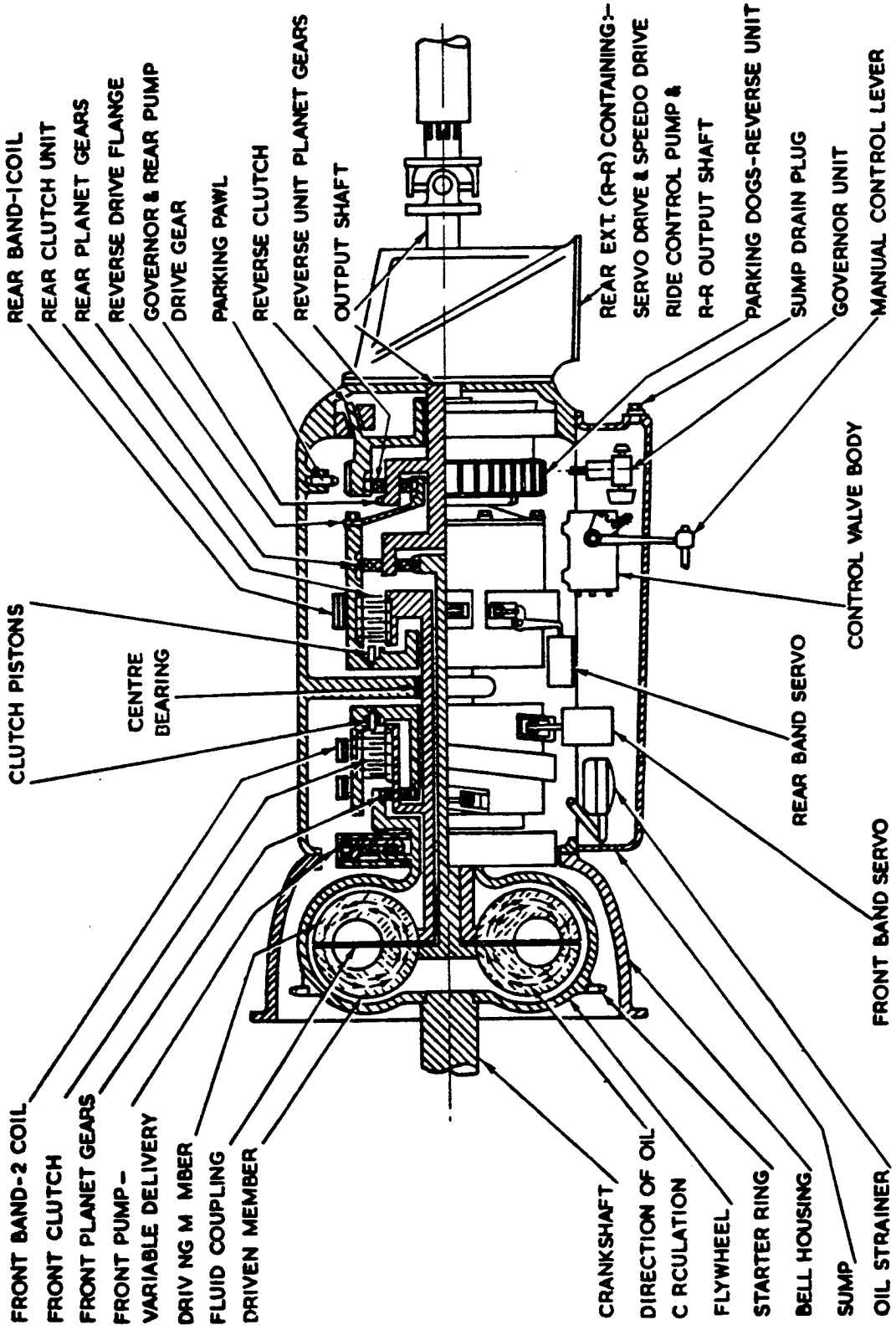

SECTION

PRINTED IN ENGLAND

FOR INFORMATION:

AUTOMATIC GEARBOX

In adapting the Hydra-Matic Transmission to the Bentley chassis, it has been necessary to modify the original design in a number of important respects.

These modifications do not affect the principles of the Hydra-Matic design which remain unaltered, but allow for the incorporation of additional Bentley design features.

The resulting Automatic Gearbox has been so designed that only small changes have been necessary in the current production chassis, and the overall length of the Transmission from the engine bolting face to front universal joint flange is the same.

The main differences are embodied in the rear extension of the gearbox (see drawing attached) where the parts of Bentley design are shown in section. Original Hydra-Matic parts are shown in outline only.

The rear extension casting has been re-designed to incorporate the Bentley wheel-brake servo motor, ride control pump, speedometer drive gear, and gearbox output shaft, on which the reverse epicyclic unit from the original Pontiac rear extension is mounted. The ride control pump, which provides variable damping to the rear shock absorbers, employs Automatic Transmission fluid taken from the gearbox sump by means of a pipe through the orifice normally used in 1952 G.M. cars for "under-hood" gearbox filling. The filling of the Bentley Automatic Gearbox is, therefore, carried out through the dipstick orifice.

The throttle-valve linkage has been re-designed to give slightly altered upshift characteristics. The manual control lever on the steering column, and the operating linkage, the starter ring, flywheel and divided bell housing are also of Bentley manufacture.

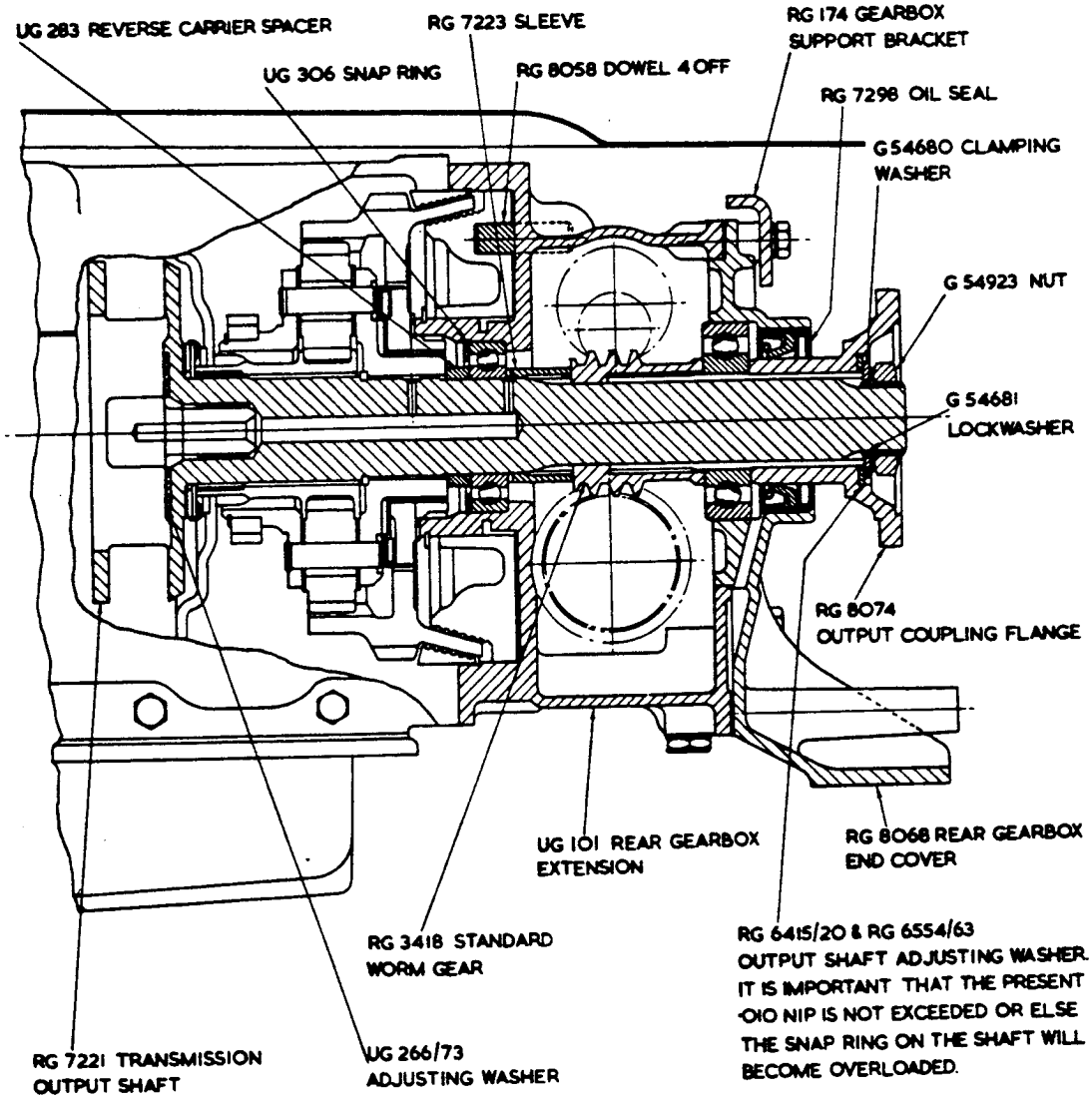

FIG. 1. DESIGN DIFFERENCES - REAR END.

PRINTED IN ENGLAND

FOR INFORMATION:

AUTOMATIC GEARBOX

Information is given below on the recommended procedure for the Removal and Replacement of a complete Gearbox unit.

Special jacking arrangements are necessary for this operation to ensure the correct alignment of the two dowelled halves of the bell-housing.

The simplest method is to elevate the car on a ramp, or run car over a pit, and use the "Manzel, Trans-lift", a jack which has been specially designed for this purpose.

Where this tool is not available, normal garage equipment can be adapted for use. It will be necessary to provide four steel support trestles to raise the car so that there is a clearance of 2 feet 6 inches between the bottom of the frame and the floor.

Also, a steel support tray, to fit the gearbox sump, will be necessary, as shown in Fig. 1, for attachment to the gearbox lifting jack.

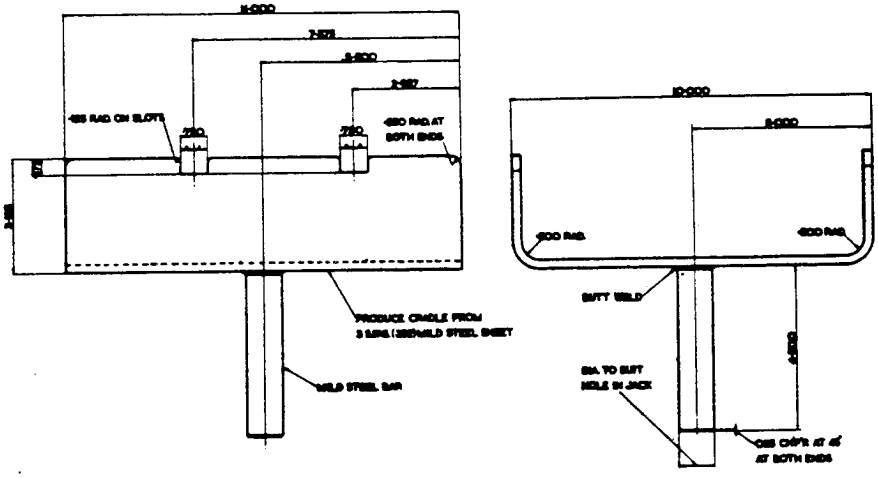

FIG. 1. SUPPORT TRAY - DIMENSIONS.

REMOVAL:

1. Run car onto ramp, or raise car on trestles.

2. Lock Master Switch in OFF position.

3. Remove front seats, and rear seat cushion. Remove carpets from both front and rear floors, leaving centre portion. Suitably cover interior of car.

4. Drain the coolant system.

5. Remove foot brake pedal, retained by pinch-bolt.

6. Disconnect accelerator operating rod (J) (Fig. 2) at top end. Unhook return spring from accelerator pedal lever and floorboard.

7. Unscrew front floorboard retaining screws (39 off), and remove floorboard, through right-hand door.

8. Disconnect and remove battery.

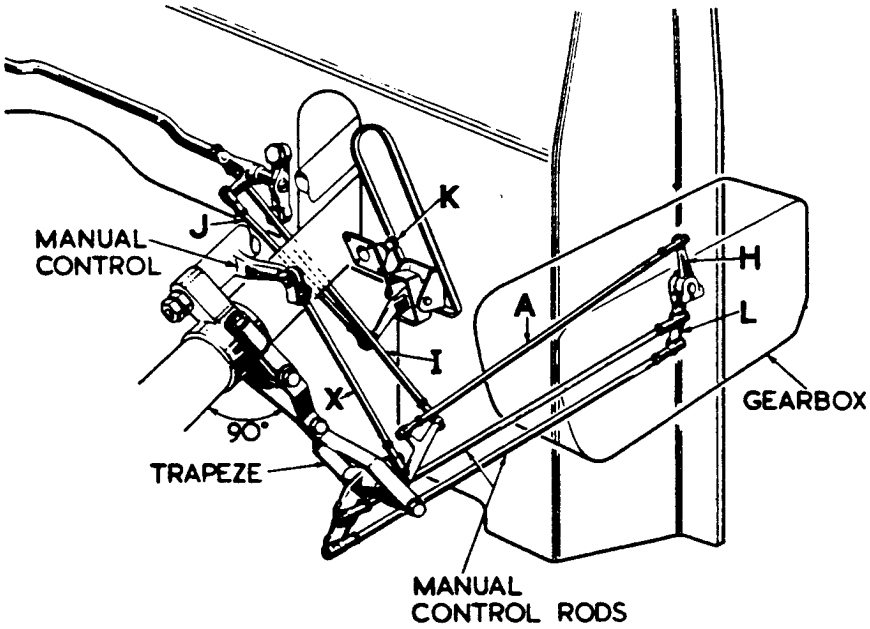

FIG. 2. GEARBOX OPERATING RODS.

9. Disconnect the two horizontal manual control rods (see Fig. 2) from the ball joints on the lower gearbox lever (L).

10. Disconnect the horizontal throttle-valve rod (A) from the ball joint on the upper gearbox lever (H). Slacken pinch-bolts and remove levers (H) and (L) from shaft.

11. Remove split pin from foot brake pedal and disconnect spring. Remove clevis pin, spring link, and sleeve.

12. Place the Ride Control lever on the steering column at NORMAL.

PRINTED IN ENGLAND

13. Remove the 2 BA screw and nut securing the operating lever bracket to the ride control pump on the gearbox, and remove lever and bracket complete.
Disconnect from rear of ride control pump, oil pipe to shock absorbers.

14. Disconnect the speedometer drive cable from the gearbox.

15. Remove all undershields, including servo protector.

16. Remove the four retaining bolts and washers from the starter mechanism, and disconnect the cable from the starter motor. Remove the Bijur drive from the rear of the starter motor, together with the spring, two paper gaskets and steel distance piece.

Remove the starter motor and paper gasket.

17. Unscrew the six 3/16" retaining screws and remove the flywheel bottom cover.

18. Slacken back the inner nuts on the gearbox torque reaction brackets, and remove the two oval rubbers from their retaining cups.

19. Remove the front exhaust pipe:- unscrew the six exhaust pipe bolts at the exhaust manifold flange and the four bolts at the silencer flange. Disconnect exhaust pipe from forward and aft brackets. Loosen the bolt at the top of the aft exhaust pipe stay and swing bracket above chassis frame. Collect the two corrugated gaskets.

20. Remove the servo:- disconnect foot brake rod (A, Fig. 3), from lever (Z), disconnect hand brake lever rod (N) from lever (Y). Disconnect rod (G) from lever (R) and unscrew the rod from socket on actuating lever (P) of servo. Remove the ¼" bolt (X) from master cylinder equaliser bracket to release the two drag link rods.

Remove the servo retaining setscrew and carefully pull the servo off the three driving pins. Collect the 'Ferodo' sealing washer.

21. Remove the two 5/16" nuts, spring washers and bolts fitted to the bottom rear end and support, these nuts are accessible through holes in the support bracket. Remove the two nuts from the Silentbloc fixing bolts.

22. Remove the chassis frame stiffening tube, underneath front universal joint, retained by two 7/16" bolts.

PRINTED IN ENGLAND

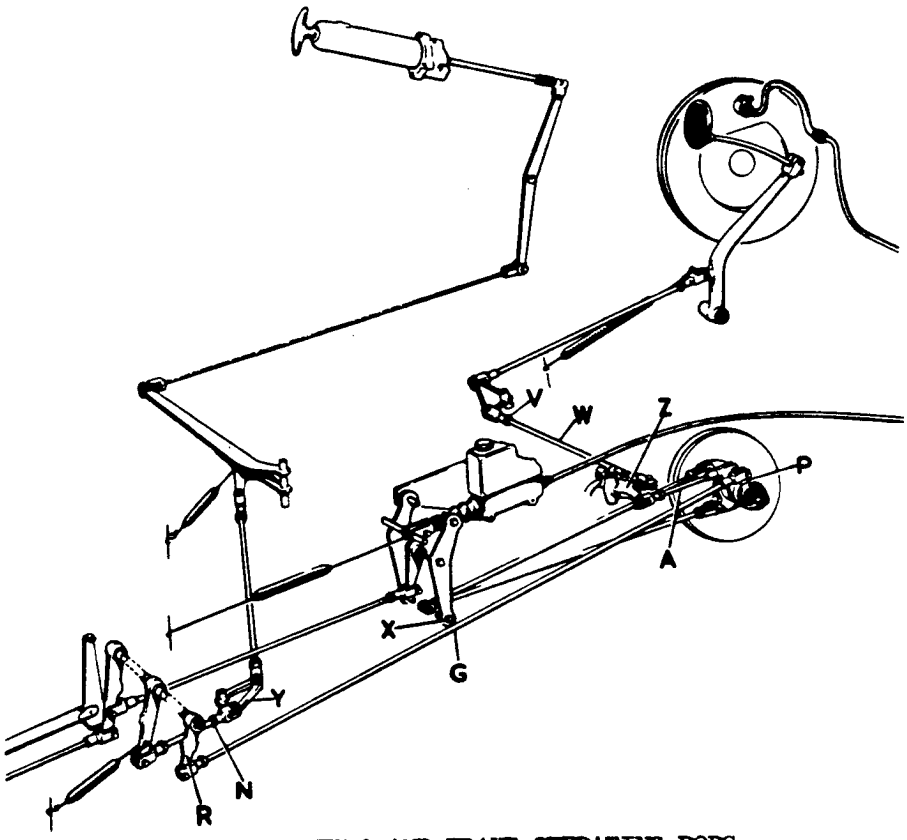

FIG. 3. SERVO AND BRAKE OPERATING RODS.

23. Remove the fore and aft tie-rod, complete with triangular packing piece from under bracket by removing the two 5/16" nuts and washers securing rod to rear of gearbox, and the two 5/16" bolts securing rod to cruciform. The nuts fitted to the stay rod itself should not be disturbed.

24. Disconnect foot brake, transfer rod at (W) Fig. 3, unscrew from joint (V) and remove.

25. Remove cover from brake operated stop light switch.

26. Disconnect and slide rearwards the front propellor shaft. Remove the four bolts from the front and centre universal joint flanges. Remove the three 3/16" bolts from centre universal joint flexible bearing bracket on the cruciform, support rear propellor shaft above cruciform member, and slide front propellor shaft rearwards as far as it will go.

27. Drain oil from gearbox and flywheel into clean receptacle - remove gearbox drain plug, then remove flywheel drain plug after rotating flywheel and torus cover to bring drain plug to lowest point. Examine oil for foreign matter and replace drain plugs.

PRINTED IN ENGLAND

28. Disconnect and remove ride control feed pipe from gearbox.

29. Support the engine under the engine sump immediately in front of the flywheel cover by means of a jack. Interpose block of wood between sump and jack to spread load. The engine should be raised just sufficient to take the load off the gearbox rear mounting.

30. Remove the thirty bolts securing together the flywheel, flywheel cover and starter ring, rotating flywheel gradually for access. Remove the two dowel cover strips.

31. Remove the four nuts and bolts securing the rear gearbox mounting cross member bracket, and remove the bracket.

32. From above the gearbox, remove the three left-hand set-bolts and one right-hand set-bolt from front side of bell housing at the centre bolting flange, leaving one dowel bolt each side and four set-bolts at top.

33. With special tray fitted to movable lifting jack as shown in Fig. 4, slide jack under gearbox sump and just take the weight off the gearbox.

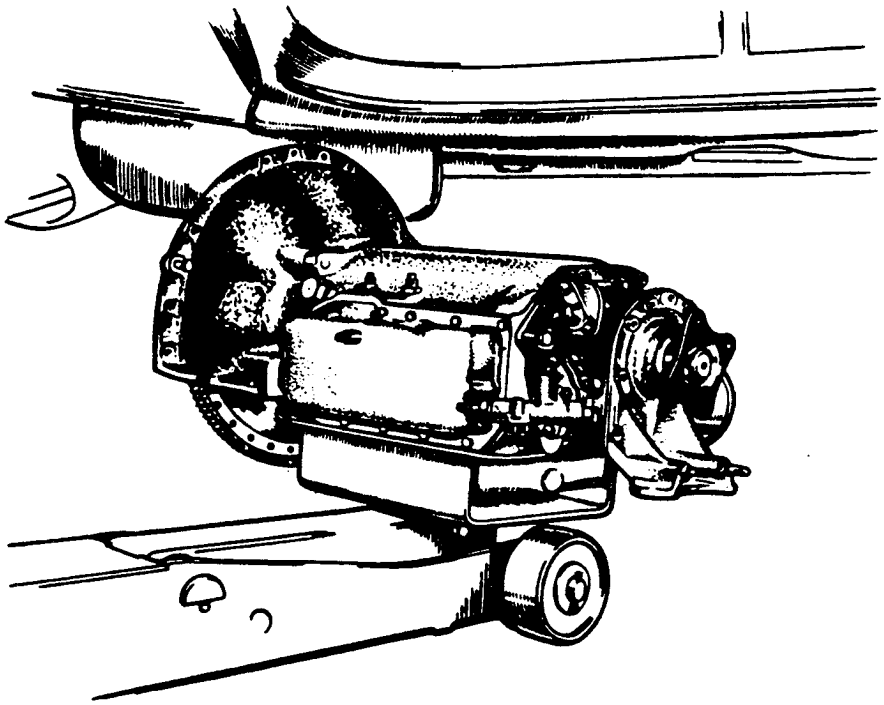

FIG. 4. REMOVING GEARBOX FROM UNDERNEATH SIDE OF CAR.

34. Removethe remaining four set-bolts and the two dowel bolts from the bell housing flange, tap out the dowel bolts gently rearwards.

35. Remove the seven 7/16" bolts securing the torque reaction bracket and remove bracket.

36. Ease supporting jack and gearbox gently rearwards until spigot bearing is clear of flywheel. Lower the gearbox and clear from car. Discard flywheel sealing gasket.

37. Remove the front half of the bell-housing from the engine secured by eight bolts. It may be necessary to slightly lower the engine for access to two top bolts. Rotate the front bell housing 180° and lower below flywheel.

38. Refix front bell-housing to rear bell-housing on removed gearbox.

NOTE:- The two bell-housing halves are paired and must at all times be kept together.

Refix ride control pump bracket and lever and replace ride control feed pipe.

REPLACEMENT:

1. Place the new automatic gearbox assembly on the lifting jack and remove the front bell-housing.

2. Invert the front bell-housing and place between engine and flywheel raise and turn through 180°. Bolt into place on engine with the eight securing bolts.

3. Remove the ride control feed pipe, and also ride control pump bracket and lever assembly.

4. Remove, from rear of gearbox, the torque reaction bracket retained by seven 7/16" bolts.

5. Inspect all bolting faces for cleanliness and freeness from burrs, paying particular attention to the fluid coupling cover and flywheel bolting faces. Thoroughly clean off gearbox assembly.

6. Measure the diameter of the two dowels on the flywheel, and with a large taper pin measure the diameter of the two locating holes in the starter ring. Rotate the flywheel until the large dowel is in the same relative position as the larger of the locating holes on the starter ring.

7. Lightly smear flywheel bolting face with Duckham's "Keenol". Position a new flywheel gasket firmly on the flywheel bolting face and remove any excess grease.

8. Raise the gearbox and align to engine (1) spigot bearing, (2) Dowels in flywheel.
Ease gearbox into position, taking great care not to damage or buckle the sealing gasket.

9. Refit the two dowel bolts between the front and rear bell-housing halves. Do not tighten nuts at this stage.

10. Reposition the rear gearbox support cross member bracket.

11. Rotate flywheel and check position of the two dowels
If difficulty is experienced in mating flywheel and torus cover, check correct relative position of dowels. Ensure that the sealing gasket is not buckled or displaced.
If necessary, separate gearbox and repeat operations 6, 7, 8, 9 and 10.

12. Refit the four set bolts at the top of the bell-housing, also the three bolts to the left-hand side and the one bolt on the right-hand side, but do not tighten nuts.
Tighten the two dowel bolt nuts and then the eight set bolt nuts. Remove the supporting jack from under gearbox.

13. Refit the four bolts securing the rear gearbox support cross member to the chassis frame. Replace the two bottom Silentbloc fixing nuts, and also the two bolts and nuts securing the gearbox end cover to the cross member bracket, through the recess holes in the cross member bracket.
Remove supporting jack from under engine.

14. Replace the thirty flywheel bolts and the two lockplates over the dowels. Rotate flywheel slowly and tighten bolts as evenly as possible.

15. Replace servo motor fibre washer to gearbox taking care that inner chamfer on washer is towards the gearbox.
Carefully refit the servo motor, locate the driving pins, replace and tighten the centre retaining bolt.

16. Replace all disconnect parts.

Check adjustment of servo motor, see Silver Wraith Workshop Manual, Section RJ 5.

Check that starting and reverse light switch at base of steering column is operating correctly, and that the actuating lever is between the two contacts.

Refill the cooling system.

Remove the ride control feed pipe and the gearbox sump, and adjust the gearbox servo brake bands in accordance with Bulletins RDB.46. and RB.114.

After replacing sump, check drain plug is secure and refill gearbox in accordance with Bulletins RB.116 and RDB.48.

Expel all air from the oil pressure pipes to rear shock dampers, see Workshop Manual, Section RR.1.

17 Run the engine with the control lever at (N) for a few minutes, and examine underside of gearbox for oil leaks.

Check adjustment of all gearbox controls, see Bulletins RB.115 and RDB.47.

Test car on road and make final adjustments as necessary.

FOR INFORMATION

FITTING A NEW AUTOMATIC GEARBOX

The crankshaft assembly on cars fitted with an automatic gearbox is carefully balanced, both statically and dynamically, and it is important when fitting a new gearbox as a replacement that this balance be maintained.

The torus cover, which is bolted to the flywheel and encloses the fluid coupling, should at all times be retained with the engine crankshaft to which it was originally fitted, and it is therefore necessary to fit the original torus cover to the new gearbox. It is also for this reason that replacement stock engines are supplied with a torus cover already fitted.

After removing the automatic gearbox assembly from the chassis as set out in Bulletin BB-171 the procedure is as follows:-

(i) Free the lock washer securing the main shaft clamping nut, and remove the nut, lock-washer and driven (front) torus member.

(ii) Remove the circlip securing the driving (rear) torus member and remove the torus member.

(iii) Remove the torus cover, drawing it forward carefully to avoid damaging the oil seals. Remove the rear half bell-housing and gasket.

(iv) Re-fit the original rear half bell-housing to the new gearbox using a new gasket as necessary. Carefully install the original torus cover onto the splines of the front drive gear, pushing it gently without rocking to prevent damage to the oil seal and rings.

(v) Re-fit the driving torus on to the splines of the front planet carrier and re-fit the snap ring, ensuring that it seats securely in the groove.

(vi) Re-fit the front driven torus member against the main shaft snap ring. Move the shift lever into reverse position to lock the rear train.

(vii) Fit a new mainshaft lock plate with the ear over the flat on the torus hub. Fit the mainshaft nut and tighten to 30-35 ft. lbs. torque before locking.

The gearbox is then ready for fitting to the chassis.

FOR INFORMATION:

AUTOMATIC GEARBOX
MICRO-SWITCH.

Certain chassis fitted with the Automatic Gearbox, incorporate a micro-switch assembly as shown in sketch below. The micro-switch, operated by the gear range selector lever, comprises two independent switches. With the lever in the Neutral position, one switch is closed to complete the circuit to the starter motor solenoid, and when the lever is moved to the Reverse position the other switch is operated to illuminate the reverse light.

Should Retailers receive complaints of inability to start cars fitted with the Automatic Gearbox, it is possible that the operating finger on this type of switch is failing to make good contact with the Neutral switch operating leaf, and thus not completing the solenoid circuit.

Inspection and rectification should be as follows:-

1. Place selector lever in 'N' (Neutral). Switch on ignition and press starter button.

2. If the starter motor fails to work, move selector lever to 'R' (Reverse) and confirm that reversing lights are illuminated.

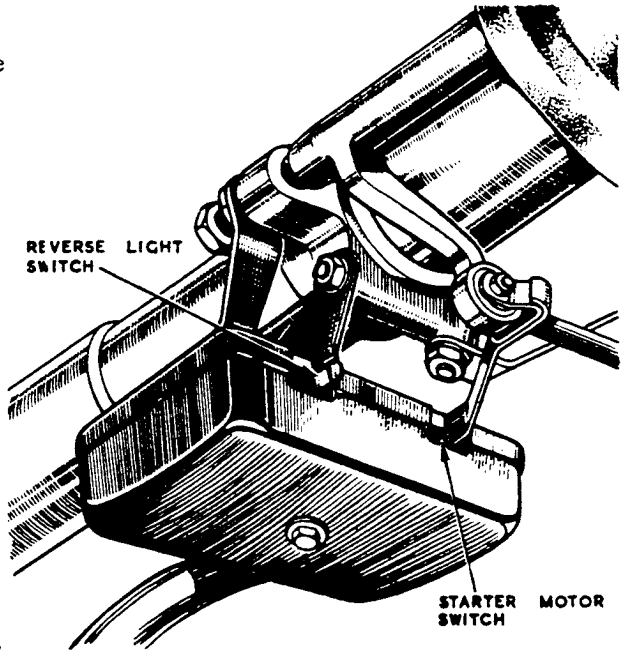

MICRO-SWITCH.

3. Re-engage Neutral and insert a suitable shim between the switch leaf and the operating finger to ensure switch is operating. Again press starter button, if the engine now starts, the setting of the operating lever is at fault. If the starter motor still fails, check starter wiring circuit for continuity.

Remedy:- by loosening the switch bracket fixing nuts and reposition the switch. Engage position 4 and switch on ignition. Keeping the starter button depressed, gradually move the selector lever into Neutral. The starter should then begin to operate approximately 1/10th inch before the lever reaches the Neutral detent position. Position micro-switch to operate starter at this setting.

Do not bend the operating lever unless the above adjustment does not remedy fault.

Finally test for satisfactory starting and Reverse lighting.

FOR CATEGORY 2 ACTION

MODIFICATION

Left Hand Drive Bentley 'R' Type Fitted with Automatic Gearbox. Ride Control Pump Flexible Pipe.

Experience has shown that, on the left hand drive Bentley 'R'Type fitted with an Automatic Gearbox, the flexible pipe from the ride control pump to the four-way union mounted on the frame cruciform member just behind the gearbox, can be burnt by fouling the exhaust pipe. In exceptional cases this may lead to considerable loss of oil from the gearbox, which, although causing no permanent damage, will give rise to immediate erratic and noisy operation. A shorter pipe, Part No. RF.9971, has been fitted on production on chassis No. B-20-UN and from B-26-UN onwards.

Retailers should check all left-hand drive 'R' Type Bentleys, fitted with an Automatic Gearbox, in their area at the earliest opportunity on service and if necessary, reposition the flexible pipe as described below.

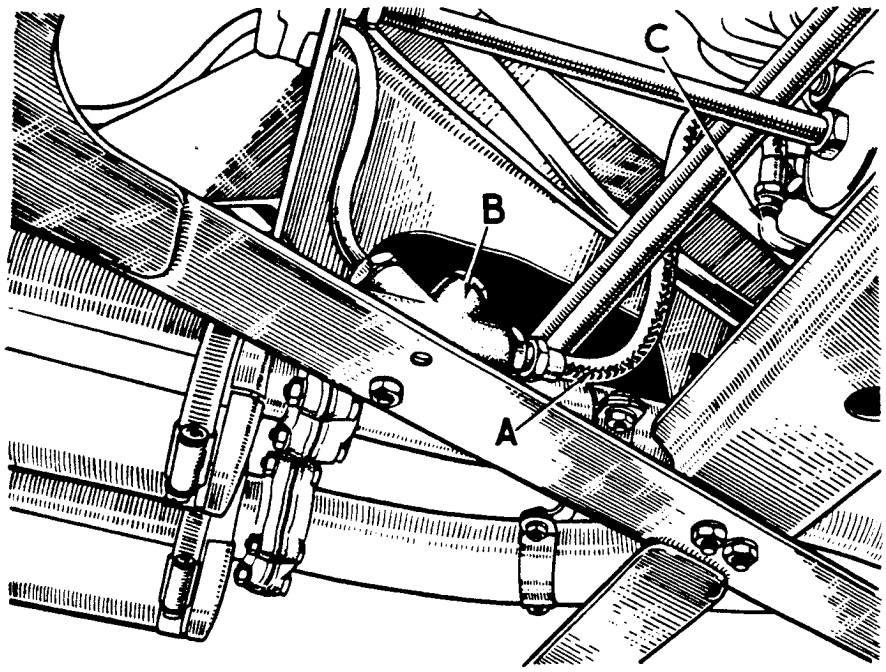

FIG.1 THE FLEXIBLE PIPE RE-POSITIONED.

A. Repositioned Flexible Pipe. C. L-Shaped Outlet Pipe.
B. Four-Way Union.

Procedure:

The flexible pipe may be re-positioned away from the exhaust pipe as follows:-

(i) Loosen the bolt attaching the four-way union to the frame cruciform and turn the union so that it lies parallel to the propellor shaft and the car centre line. Tighten the bolt.

(ii) Loosen the union nut and turn the L-shaped outlet pipe from the ride control pump so that it points vertically upwards. Tighten the union nut.

(iii) If necessary loosen the flexible pipe unions so that the pipe may be positioned to run freely well clear of the exhaust pipe and its support bracket.

(iv) Tighten the unions, jack up the rear of the car, run the car in gear and test for leaks.

Fig.1 shows the flexible pipe repositioned. If satisfactory clearance cannot be obtained in this way the shorter pipe RF.9971 must be fitted.

For Category 3A Action

MODIFICATION

The Automatic Gearbox Ride Control Pump

Experience has shown that on some cars fitted with an Automatic Gearbox, the operation of the ride control pump has proved inconsistent.

This may be attributed to two causes:

1. Air locking in the pump delivery lines due to incorrect positioning of the pump allowing the gears to draw in small quantities of air.

2. Failure of the pump driving key to engage fully with the driving gears.

This Bulletin details the method of correction and incorporates a modification for increasing the diameter of the pump intake passage, which further improves its operation.

Whenever a complaint is received of the ride control system on a chassis with automatic gearbox the following procedure should be carried out.

PROCEDURE:

To Remove and Dismantle

(i) Remove the left hand rear shield under the gearbox to expose the ride control pump.

(ii) Remove the nut, bolt and spring washer securing the ride control operating lever to the pump body and remove the lever and bracket as one.

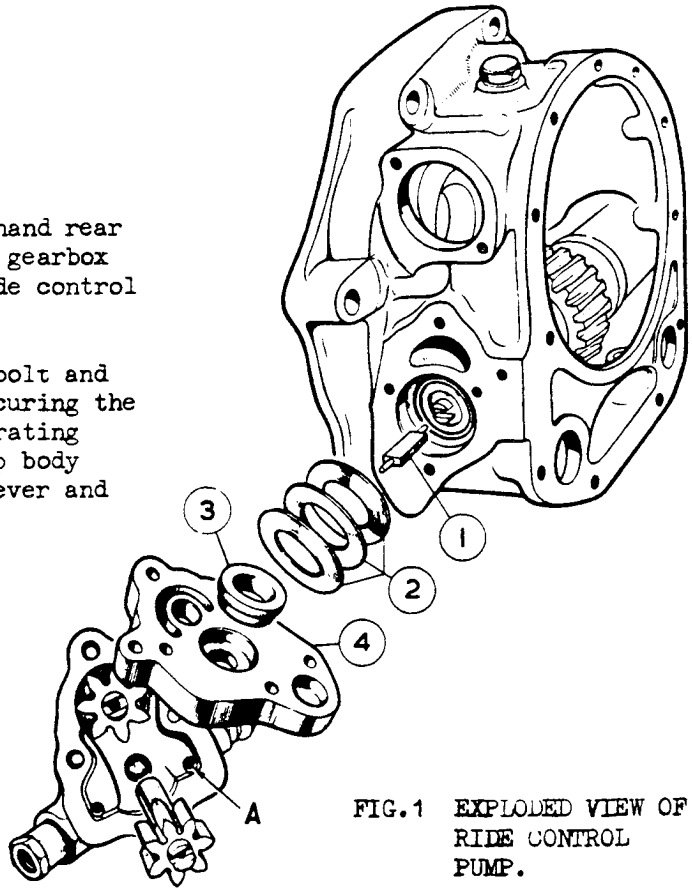

FIG.1 EXPLODED VIEW OF RIDE CONTROL PUMP.

(iii) Remove the two nuts and spring washers securing the feed pipe flange. Disconnect the flexible outlet pipe.

(iv) Remove the four screws retaining the pump to the gearbox rear extension and remove the pump. Collect the driving key (1 Fig.1).

(v) Remove the two screws securing the intermediate plate (4). The plate will spring outwards as the screws are loosened under the influence of the three Belleville washer (2) which apply the pre-load to the taper bearing. Remove the plate and collect the Belleville washers and distance piece (3).

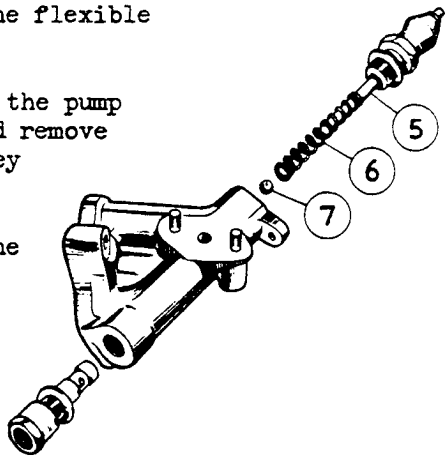

FIG.2 THE PUMP AND VALVE ASSEMBLY.

(vi) Undo the hexagon nut and remove the ride control valve rod (5 Fig.2), spring (6) and steel ball (7).

(vii) Thoroughly clean all parts and remove all traces of jointing compound from the joint faces with a flat stone.

To Enlarge the Intake Passage

(viii) The pump intake passage is shown at A Fig.1. The drilling should be increased from .250" (6.3 mm) to .343" (8.7 mm). First enlarge the hole with a 5/16" drill and then with a 11/32" drill. In order that the drill may enter centrally, the shoulder on the pump flange may be relieved with a round file. Care must be taken to ensure that the drill does not protrude too far beyond the end of the drilling to damage the threads for the control valve rod nut.

(ix) Remove all traces of swarf.

To Reassemble and Refit.

(x) Temporarily refit the intermediate plate with the distance piece and Belleville washers assembled as shown in Fig.1, and fully tighten the two securing screws. Rotate the propellor shaft until the driving dogs on the driving shaft are vertical.

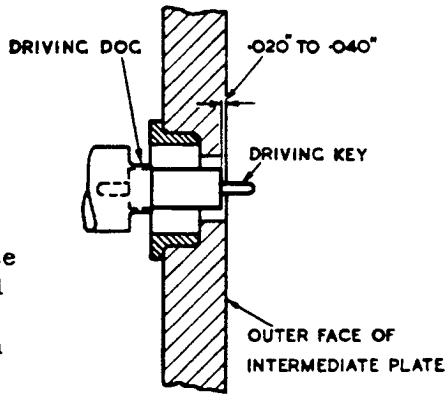

FIG. 3.

Insert the key and, pressing it fully home, measure the depth of the end of the driving blade below the outer surface of the intermediate plate (Fig.3.) This should lie between .020" and .040" .5 mm to 1.0 mm).If below this limit the outer face of the intermediate plate should be faced off sufficiently to achieve it.

This operation ensures that the driving blade of the key satisfactorily engages the dogs of the pump driving gear.

(xi) Remove the intermediate plate and refit it with a minimum quantity of Heldite jointing compound. The Belleville washers may be held in position with white grease. Do not fully tighten the securing screws. Fit the driving key.

(xii) Reassemble the pump control valve and turn the pump gears so that the driving dogs are vertical. Loosely bolt the pump body to the gearbox, using a minimum of Heldite jointing compound and engaging the driving key. Push the pump body forward towards the front of the car to the limit of the screw hole clearance and tighten the retaining screws. Tighten the intermediate plate retaining screws. Remove all excess jointing compound. This method of positioning the pump is most important and should be followed exactly, to ensure the required face seal between the gears and the intermediate plate.

(xiii) Refit the ride control operating lever and bracket.

(xiv) Refit the pump feed pipe with the two 2BA nuts and washers. Refit the flexible outlet pipe ensuring that it is well clear of the exhaust pipe.

(xv) Jack up the rear wheels and bleed the pump from the blank plug in the four-way union on the frame just behind the gearbox. with the eingine running in Range 4 at idling speed and the steering column hand control at 'Hard'. Continue running until a steady flow of oil emits from the union and then replace the plug.

(xvi) Replace the gearbox undershield and check the gearbox oil level (see Bulletin BB.153)

FOR CATEGORY 2 ACTION

MODIFICATION

Gearbox Tie-Rod Bracket.

1. GENERAL

It has been found necessary to modify the transverse mounting bracket for the rear end of the gearbox tie-rod fitted to the Bentley 'R' Type and to the Bentley Continental from B series onwards.

On the earlier rivetted frame the tie-rod bracket is to be strengthened by the addition of a stiffener and a backing plate. The aluminium seating for the tie-rod rubbers is to be replaced by a steel seating.

On the later welded frame the tie-rod bracket is to be cut away and replaced with the Mark VI type bracket.

Details of both modifications are set out in this Bulletin and Retailers are asked to incorporate them on a Category 2 basis, dealing with cars as they come in for service.

The original Mark VI type bracket is now being fitted on production. Both modifications apply equally to cars fitted with either automatic or synchromesh gearbox.

2. RIVETTED FRAMES MODIFICATION

(a) Chassis Nos. Affected:

Bentley 'R' Type

B-2-RT to B-159-SP (inclusive)
B-163-SP to B-21-TO (inclusive)
B-25-TO to B-55-TO (inclusive)
B-59-TO to B-117-TO (inclusive)
B-121-TO
B-125-TO to B-347-TO (inclusive)
B-387-TP, B-401-LTO.

Bentley Continental

BC-1-LB to BC-20-C (inclusive)

(b) Material Required:

RG.8479	Seating - Rubber	1 off
K.308/Z	Bolt .312" Tie-Rod Seating	2 off
K.4313/Z	Nut .312" Tie-Rod Seating	2 off
K.9009/Z	Washer Tie-Rod Seating	2 off
RG.8478	Backing Plate - Tie-Rod Bracket	1 off
RG.8487	Stiffener Plate - Tie-Rod Bracket	1 off
K.453/Z	Bolt .375"dia. - Tie-Rod Bracket	1 off
K.4316/Z	Nut .375"dia. - Tie-Rod Bracket	1 off
K.9010/Z	F.S. Washer - Tie-Rod Bracket	1 off

This material is available from the London Service Station.

(c) Procedure

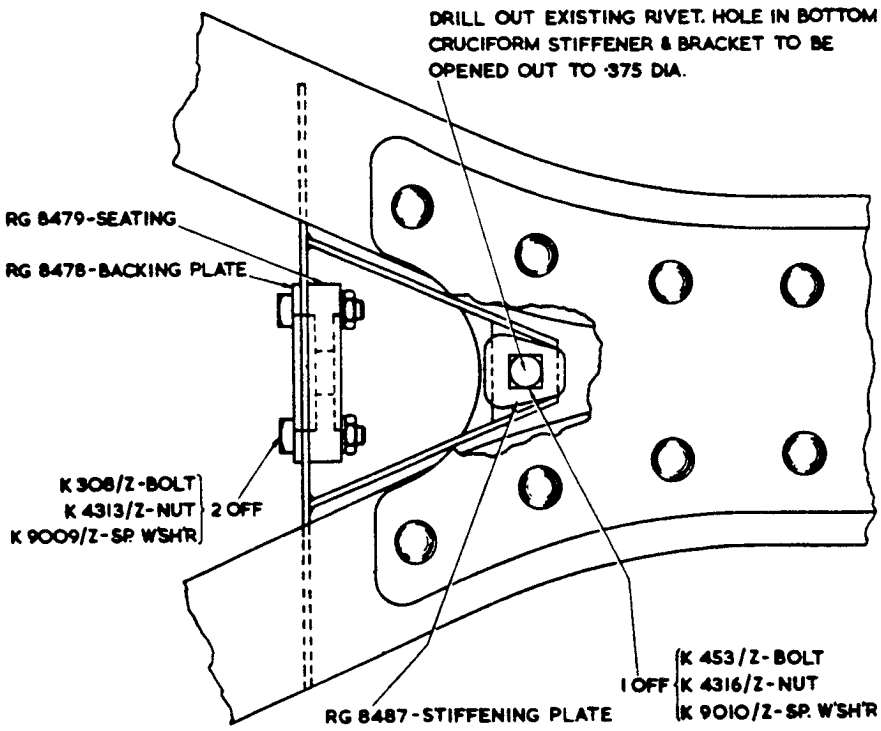

VIEW LOOKING ON TOP OF FRAME SHOWING NEW RUBBER SEATING & BRACKET STIFFENERS FITTED

FIG. 1

(i) Place the car on a ramp or over a pit.

(ii) Remove the gearbox tie-rod by removing the two nuts and spring washers retaining the rubber seating to the gearbox at the front end and to the mounting bracket at the rear end.

(iii) Drill out the existing rivet securing the bracket to the lower cruciform stiffening plate (Fig.1). Enlarge the hole to .375" (9.52 mm) dia. Fit the bolt and stiffening plate. The stiffening plate fits between the bolt head and upper face of the bracket.

(iv) Fit the new rubber seating and backing plate (Fig.1).

(v) Discard the old rubber seating and refit the tie-rod.

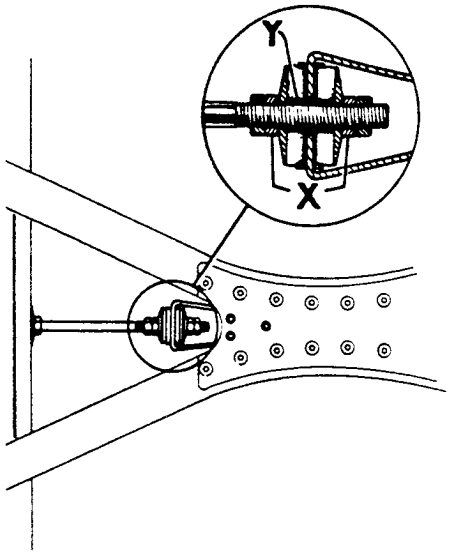

FIG. 2 ADJUSTING THE TIE-ROD LENGTH.

(vi) To adjust the length of the rod, screw up the adjusting nuts (X Fig.2) finger tight and then tighten them an equal amount until the distance piece Y is clamped. Tighten the locknuts. The adjustment should impose no fore and aft deflection on the gearbox rear rubber mounting block.

(d) Charges

A time of 2 hours is allowed and charges should be submitted on a Guarantee Form in the usual way.

3. WELDED FRAMES MODIFICATION

(a) Chassis Nos. Affected

Bentley 'R' Type

B-161-SP, B-23-TO, B-57-TO,
B-119-TO, B-123-TO.
B-349-LTO to B-385-LTO (inclusive)
B-389-LTO to B-399-TO (inclusive)
B-2-TN to B-8-UM (inclusive)
B-12-UM to B-160-UM (inclusive)
B-164-UM to B-176-UM (inclusive)
B-180-UM to B-184-UM (inclusive)
B-202-UM to B-210-UM (inclusive)

Bentley Continental

BC-21-LC to BC-49-LC (inclusive)

(b) Material Required

RG.8482	Assembly Tie-Rod Bracket	1 off
RG.3434	Packing Plate, Tie-Rod Bracket	1 off
K.345/Z	Bolt 5/16" Tie-Rod Bracket	1 off
K.4313/Z	Nut 5/16" Tie-Rod Bracket	1 off
K.9009/Z	Spring Washer, Tie-Rod Bracket	1 off
K.243/Z	Bolt ¼" Tie-Rod Bracket	2 off
K.4310/Z	Nut ¼" Tie-Rod Bracket	2 off
K.9008/Z	Spring Washer, Tie-Rod Bracket	2 off

This material is available from the London Service Station.

(c) Procedure

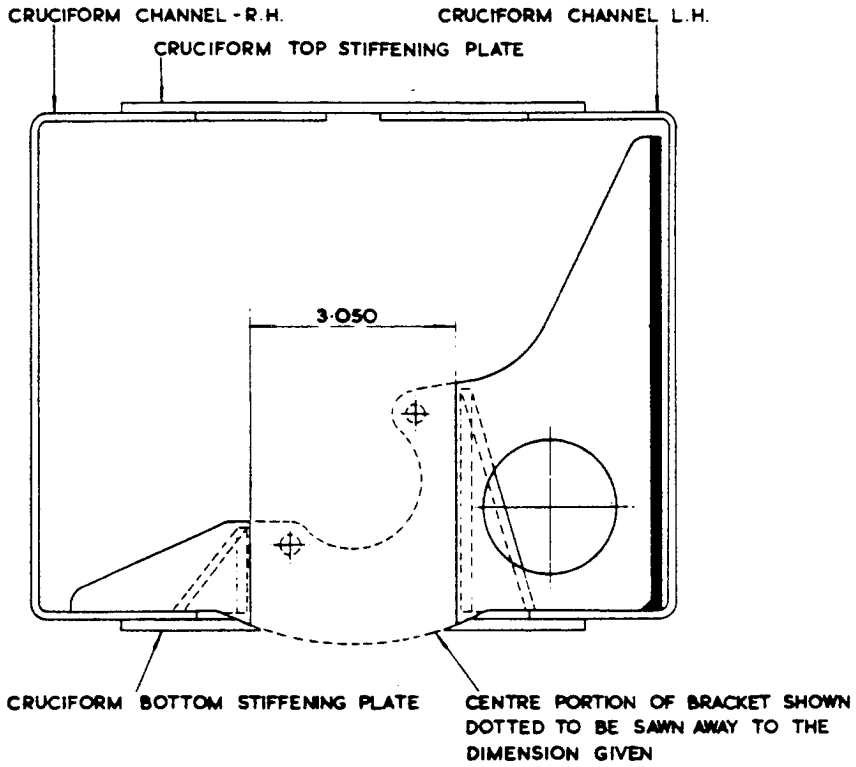

VIEW LOOKING FROM FRONT OF CAR SHOWING MODIFICATION TO EXISTING TIE ROD BRACKET

FIG. 3

(i) Place the car on a ramp or over a pit.

(ii) Remove the gearbox tie-rod by removing the two nuts and spring washers retaining the rubber seatings to the gearbox at the front end and to the mounting bracket at the rear end.

(iii) Cut out the centre portion of the transverse mounting bracket with a hacksaw as shown in Fig.3. Clean up and paint the cut edges.

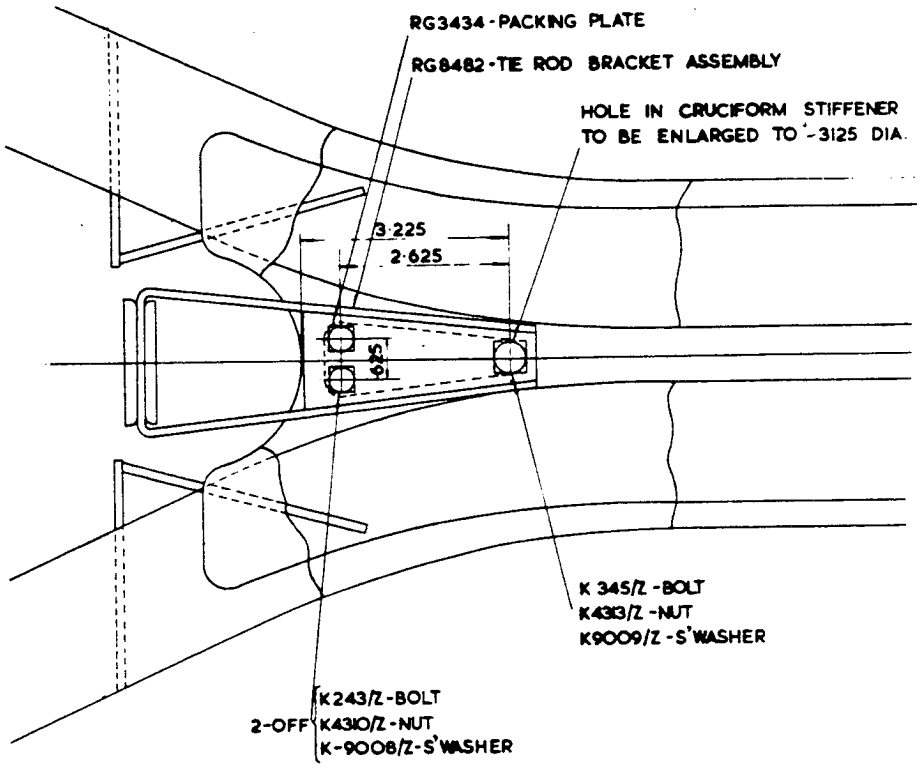

VIEW LOOKING ON TOP OF FRAME SHOWING NEW TIE ROD BRACKET FITTED IN POSITION

FIG. 4

(iv) Increase the diameter of the rear centre hole in the cruciform bottom stiffener plate from ¼" (6.35 mm) to 5/16" (7.93 mm) (Fig.4). On some frames the three holes in the stiffening plate may not already exist and should be drilled in accordance with the dimensions given in Fig.2.

(v) Fit the new bracket and packing piece to the top of the stiffening plate securing with the three bolts, spring washers and nuts.

(vi) Remove the old rubber seating from the rear end of the tie-rod and refit the rod to the gearbox and bracket.

(vii) Set the length of the rod as in para 2 sub.para (vi) above.

(d) Charges

A time of 2 hours is allowed and charges should be submitted on a Guarantee Form in the usual way.

FOR INFORMATION AND ACTION.

THE SYNCHROMESH GEARBOX.

THRUST WASHER THIRD MOTION SHAFT.

A strengthened thrust washer for the 3rd speed gear on the third motion shaft, .050" (1.25 m/m) thicker than the earlier types, is now available for replacement purpose. The washer has an overall thickness of .225" (5.72 m/m) and should be fitted whenever a gearbox is stripped down for any reason. The groove in the third motion shaft must be chamfered to accomodate the new washer and full details are set out in this Bulletin.

On current production a washer of .275" (6.98 m/m) thickness is now being fitted. Its fitting requires machining operations to existing parts which it is not intended should be undertaken on a service basis. However, full details are included in the second part of this Bulletin for information and for guidance where sufficient new parts are being fitted to warrant fitting the production type washer.

Full details of dismantling and re-assembling the gearbox are given in Section G of the Workshop Manual.

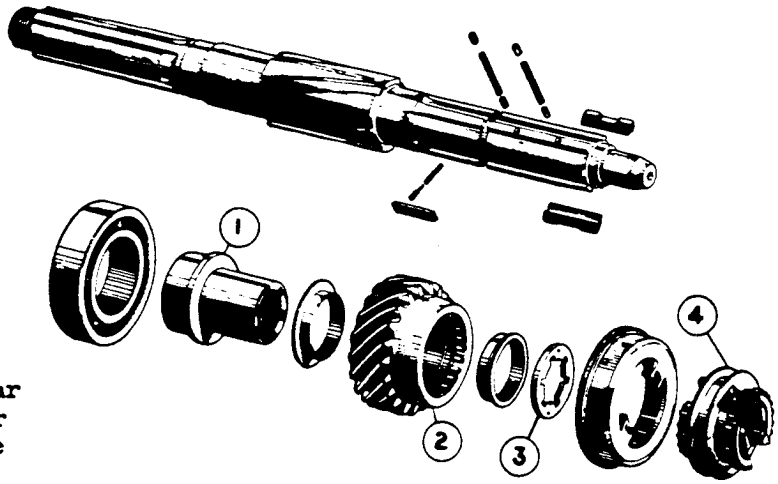

1. Sleeve
2. 3rd Speed Gear
3. Thrust Washer
4. Sliding Piece

FIG.1 THIRD MOTION SHAFT RG.5469 AND COMPONENTS.

1. SERVICE SCHEME.

Parts Required.

RG.8529 Thrust Washer-3rd Motion Shaft	1 Off
RG.8530 3rd Motion Shaft or RG.5469 modified to RG.8530 (Fig.3)	1 Off

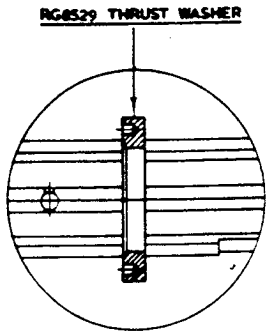

FIG.2 SECTION THROUGH THRUST WASHER IN POSITION ON SHAFT.

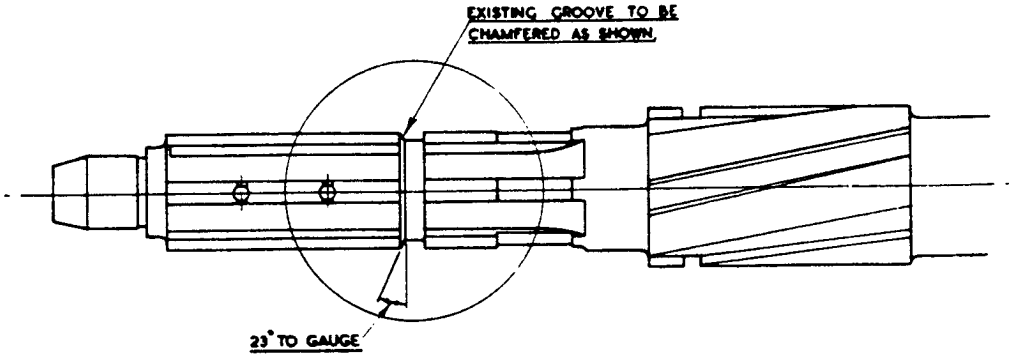

FIG.3 TO MODIFY THE THIRD MOTION SHAFT
RG.5469 to RG.8530.

The chamfer on the front f ce of the groove in the third motion shaft should be ground off if necessary using the thrust washer itself as a gauge. The washer should rotate freely in the groove but endfloat must not exceed .004" (.10 m/m).

2. PRODUCTION SCHEME.

Parts Required.

RG.8473	Thrust Washer-3rd Motion Shaft	1 Off
RG.8472	3rd Motion Shaft	1 Off
(or RG.5469 modified to RG.8472 - Fig.4)		
RG.8459	3rd Speed Gear	1 Off
(or RG.100 modified to RG.8459 - Fig.5)		
RG.8461	Sleeve - 3rd Motion Shaft	1 Off
(or GB.5374 modified to RG.8461 - Fig.6)		
RG.8467	Sliding Piece - 3rd Motion Shaft	1 Off
(or RG.5470 modified to RG.8467 - Fig.7)		

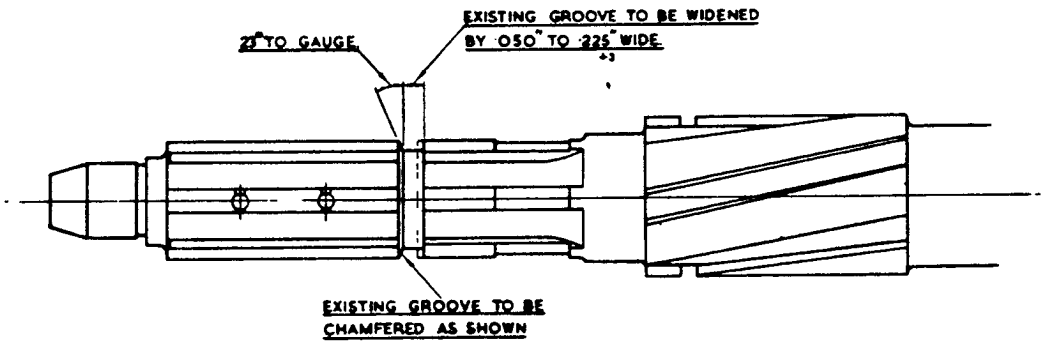

FIG.4 TO MODIFY 3RD MOTION SHAFT
RG.5469 to RG.8472

The machining operations are detailed in Figs.4,5,6 and 7. The sleeve RG.8461 may be turned in a lathe using a carbide tipped cutting tool but other parts should be ground. The machining of the 3rd speed gear requires an internal grinding machine.

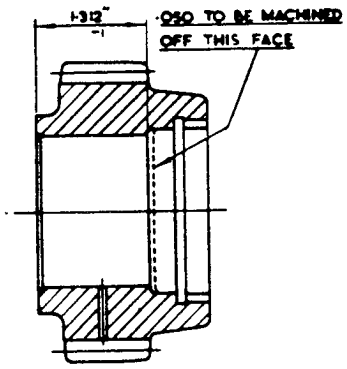

FIG.5 TO MODIFY 3RD SPEED GEAR RG.100 TO RG.8459.

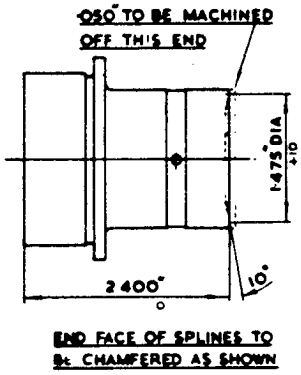

FIG.6 TO MODIFY SLEEVE GB.5374 TO RG.8461.

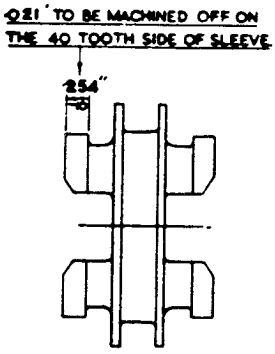

FIG.7 TO MODIFY SLIDING PIECE RG.5470 TO RG.8467.

3. RECOGNITION MARKINGS.

Gearboxes overhauled by the London Service Station will be stamped on the boss for the second motion shaft locating screw under the rear end of the gearbox as follows:

Boxes fitted with washer RG.8529 "W.1".

Boxes fitted with washer RG.8473 "W.2".

Retailers are asked to mark boxes overhauled by them in the same manner.

IMPORTANT.

Please note that the thrust washer RG.8529, which has an overall thickness of .225", fits the groove in the third motion shaft RG.8530 or RG.5469 modified as above, and that the thrust washer RG.8473, which has an overall thickness of .275", fits the third motion shaft RG.8472 or modified shafts: the relevant dimensions being the width of the groove at the top, and not the bottom of the chamfer groove, coinciding with the overall thickness of the thrust washer.

RIDE CONTROL PUMP.
FLEXIBLE OUTLET PIPE.

The flexible pipe from the ride control pump to the four way union on the chassis frame was shortened to avoid a possible foul with the exhaust pipe on certain models fitted with an Automatic Gearbox. The shorter pipe Part No. RF.9971, is now the only available replacement.

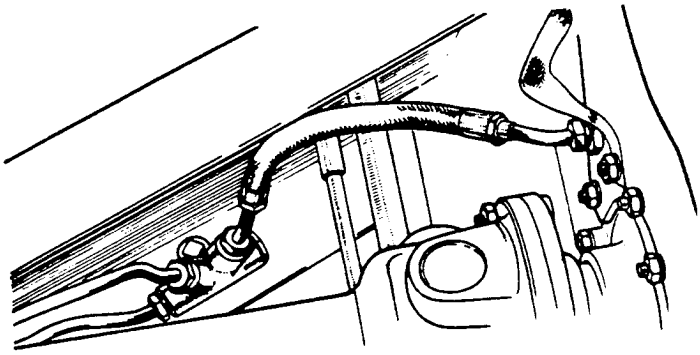

On chassis fitted with a synchromesh gearbox the shorter pipe should be positioned, as shown in the illustration, in the higher of the two forward connections in the four way union in order to gain the maximum free length. This is the connections to which a blanking plug is normally fitted. The plug and washer should be removed and fitted to the lower connection.

RF.9971 is fitted with olives and sleeve nuts and the following parts should therefore be ordered for replacement:

RF.9971	Pipe flexible	1 Off
F.85005	Olive	2 Off
F.85053	Sleeve Nut	2 Off

On chassis fitted with an Automatic Gearbox the pipe is positioned in the lower of the two forward connections as previously.

MODIFICATION.

REAR BRAKE EQUALISER.

A certain number of cars were built with the rubber support of the rear brake equaliser fitted and positioned whilst in the chassis stage of production. When the body is mounted, the effect of its weight on the geometry of the rear suspension causes distortion of the support which may lead to fracture; repositioning of the support is therefore necessary in some cases.

Examination for signs of fracture, and if necessary, repositioning on the equaliser bar should be carried out on Bentley VI cars as follows:-

B-AK and B-AJ Series. Chassis Nos.....All cars.
B-BH Series. Chassis Nos.....Up to No.B220BH on cars fitted with Standard saloon body.
Chassis Nos.....Up to No.B138BH on cars fitted with custom built body.

The attached drawing and following procedure give the necessary information required for carrying out the examination and repositioning of the rubber support.

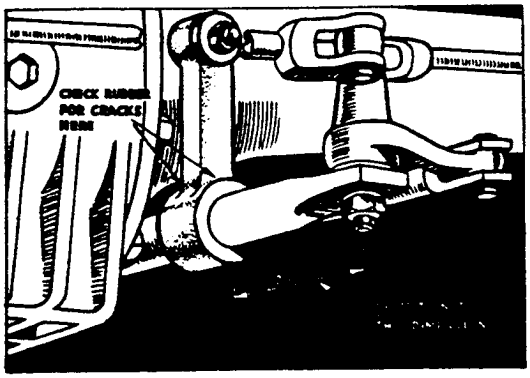

1. Disconnect the rubber support from the axle tube and flex it backwards and forwards so as to examine for cracks in the neck at the junction with the main boss. If there are any signs of cracks, replace with a new support.
2. Check that the rear face of the main boss is 2.275 ins. from the centre of the rear brake equaliser bolt, and reposition if necessary.
3. Paint the letter 'E' on the rear face halfway down the rubber leg after examination and repositioning.

All Retailers are requested to contact the owners of the cars affected in their respective areas as soon as possible, with a view to taking corrective action, and to notify this Service Depot concerning chassis numbers of individual cars dealt with under this procedure.

MODIFICATION.

CATEGORY 3A

ALTERATION TO BRAKE LINKAGE ADJUSTMENT

A modification is introduced to reduce a mechanical noise that can more accurately be described as a "clonk" from the brake linkage which may occur on application of the brakes.

In many cases, the origin of this noise has been traced to excessive free travel between the plunger and piston of the brake master cylinder, and adjustment of the brake linkage as described hereunder, has in certain instances effected a noticeable reduction of the noise.

The attached drawing shows the linkage involved in carrying out this adjustment:-

1. Ensure that the rear brakes are in the OFF position and that the lever 'R' is against its OFF stop.

2. Remove the master cylinder pull-off spring 'X' and the clevis pin 'D'

3. Adjust the rod 'C' so that the joint 'J' has zero to .050" free travel before the plunger 'M' contacts the master cylinder piston.

4. Tighten the locknut on the rod 'C'. Replace the clevis pin 'D' and the master cylinder pull-off spring 'X'.

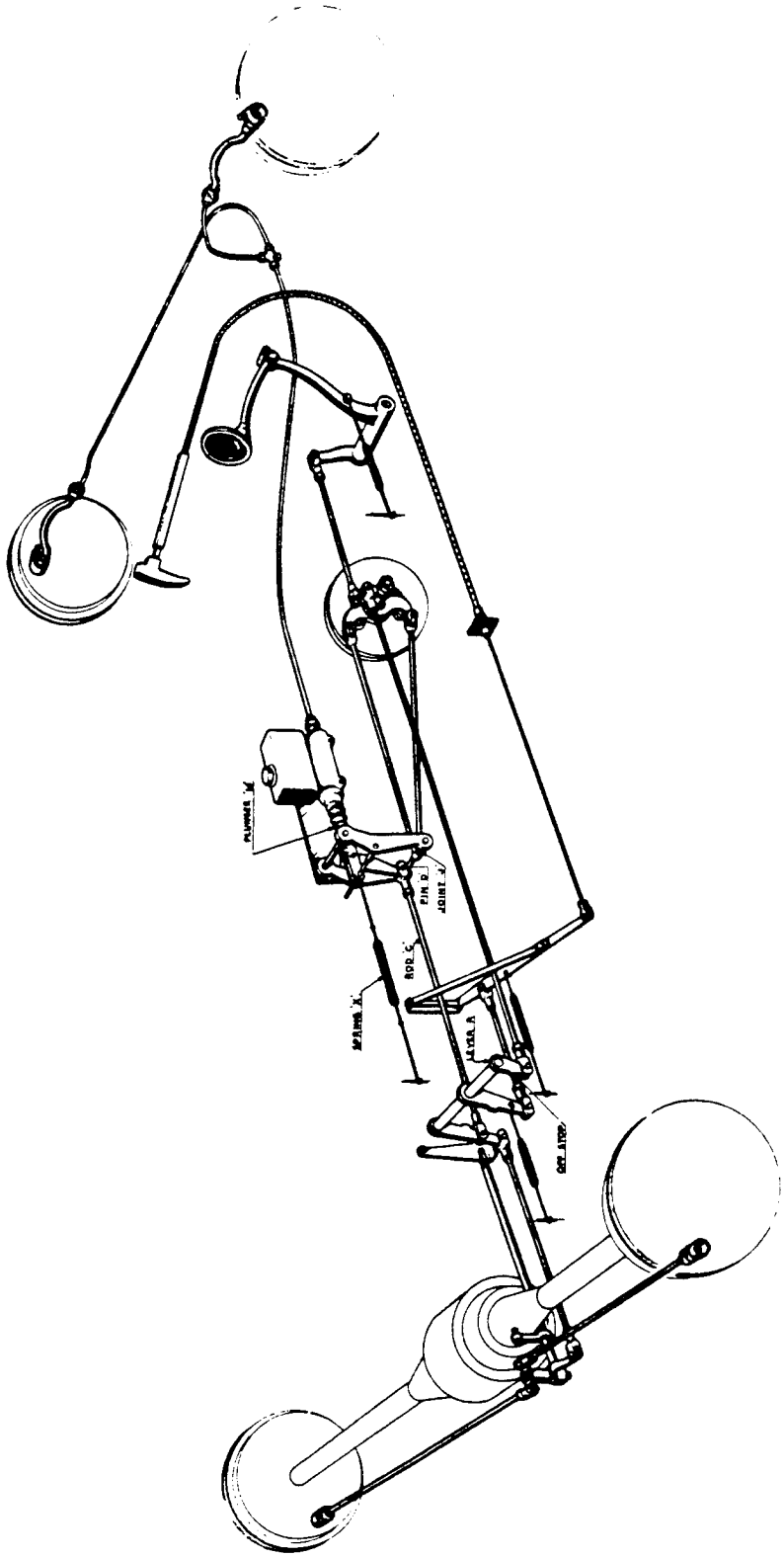
PLUNGER 'M'
JOINT 'F'
PIN 'D'
ROD 'C'
SPRING 'K'
LEVER 'A'
GUIDE PIN

FOR CATEGORY 2 ACTION.

SERVO.

For the time being, and until further notice, Retailers and Depots are requested to check for tightness the hexagon headed bolt which passes through the centre of the servo shaft. The head of the bolt is at the extreme end of the servo motor, and is quite accessible from beneath the car.

The purpose of the check is to ascertain whether any form of locking device is necessary. Therefore, will Retailers and Depots inform us whether any securing bolts are found loose when cars come in for normal servicing.

MODIFICATION TO EQUAL WEAR LINKAGE

FRONT BRAKES.

FOR INFORMATION:

Instances have occurred in service with the Bentley Mark VI, where the front brakes have failed to release properly after application.
This "Spragging" of the front brakes is due to an excessive self-servo action of the shoes, and manifests itself by a locking of the brakes even after the foot pedal has been released. In all such cases, the following modification should be carried out.

PROCEDURE:

REMOVAL OF BRAKE DRUMS:

(a) Jack up front of car, support on suitable trestles, remove road wheels and brake drums.

(b) Where steady bracket is fitted to grease catcher assembly, withdraw front hubs by removing split pin and nut on stub axle, and remove grease catcher assembly by undoing the eight retaining nuts and spring washers. (Fitted after Chassis No: B-445DZ, 477, 489, 493-DZ onwards).

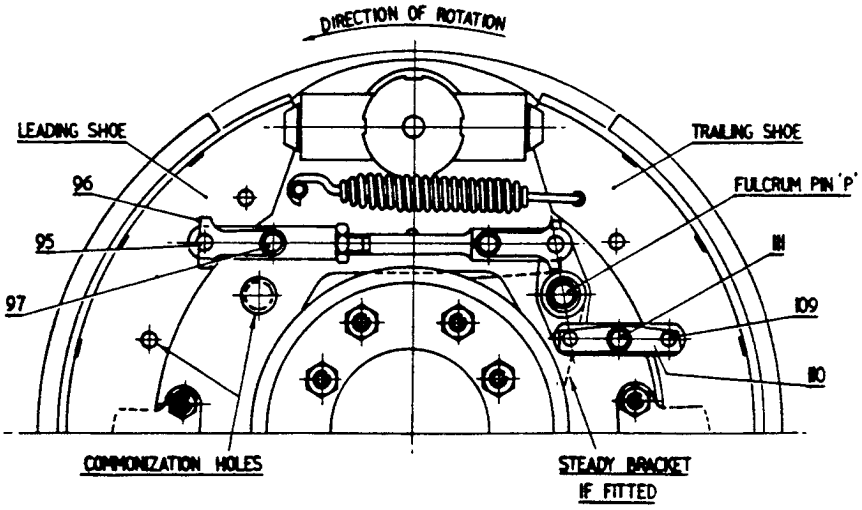

FIG. 1.

REMOVAL OF EQUAL WEAR LINKAGE (FIG.1).

(a) Remove setscrew and spring washer (111) and the locking plate (110) and by easing the load from the pull-off spring, withdraw pin (109).

(b) Remove setscrew and spring washer (97) and locking plate (96) and withdraw pin (95).

(c) Remove equal wear linkage from fulcrum pin (P) complete.

(d) Remove fulcrum pin (P) from brake carrier plate, by undoing retaining nut and spring washer on the back of the carrier plate.

(e) Withdraw rubber plug from the carrier plate front commonization hole, and replace in the rear hole from which the fulcrum pin (P) was removed.

(f) Replace the fulcrum pin in the front commonization hole.

REMOVAL OF BRAKE SHOES:

(a) Remove both brake shoes.

(b) With rasp or coarse file, carefully back off the leading 3 ins. of the leading shoe and the leading 4 ins. of the trailing shoe.

(c) Replace both brake shoes.

REPLACEMENT OF EQUAL WEAR LINKAGE:

(a) Replace the existing push rod and jaw of the equal wear assembly with the strengthened parts Nos. RG-6045/6 and nut K-4010/Z.
NOTE: If these parts are not available, the existing push rod and jaw may be used, but should be replaced at the first opportunity.

(b) Invert equal wear linkage assembly, and replace on fulcrum pin (P). (The short link should now be to the front of the car, and will line up with the lowest of the three top holes in the leading shoe, and the push rod will be to the rear and will line with the second hole from the top in the trailing shoe).

(c) Replace pin (109) in the short link, locking plate (110) and the setscrew and spring washer (111).

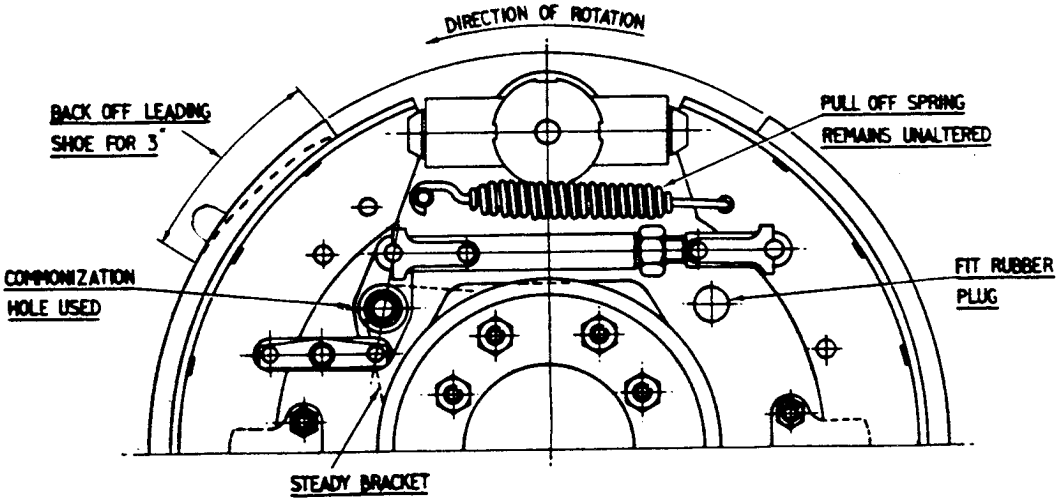

FIG. 2.

(d) Replace pin (95) in the push rod, locking plate (96), and the setscrew and spring washer (97).

(e) On cars fitted with the steady bracket, the grease catcher assembly from the left-hand wheel must be replaced on the right-hand wheel and vice-versa.

(f) Replace the front hubs, and secure the retaining nut and washer.

CENTRALIZATION OF BRAKE SHOES:

(a) From a piece of light gauge steel, make up a trammel as shown in (FIG.3) to fit over two of the wheel studs on the hub, and bend the pointer to touch lightly on the face of the brake linings.

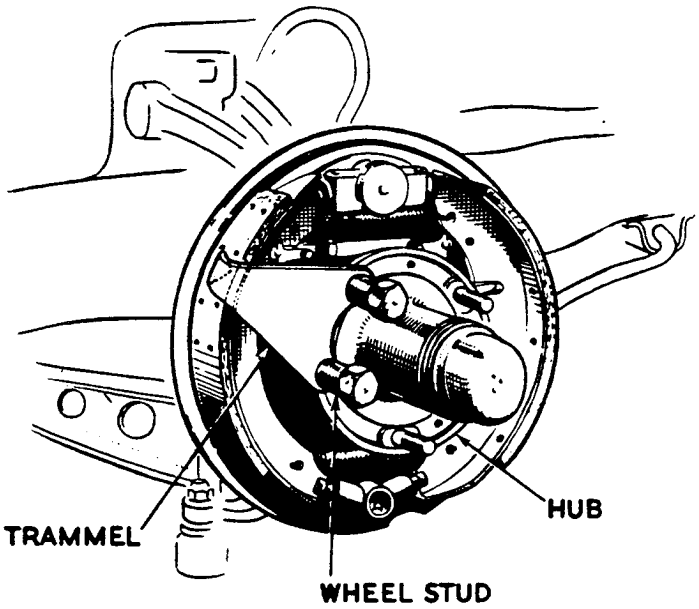

FIG. 3.

(b) Temporarily replace the brake drum, and after operating front brakes from the master cylinder, externally adjust front brake shoes.

(c) Remove brake drums and fit trammel on any two wheel studs.

(d) By making suitable adjustments to the brake equalizer push rod, centralize the brake shoes, rotating the trammel about the shoes as a gauge.

(e) When shoes are centralized, tighten the locknut on the push rod, and replace brake drums and road wheels.

(f) Finally check external adjustment of brakes.

MATERIALS REQUIRED.

PART NO:	DESCRIPTION:	NO. OFF:
RG-6045	Jaw Push Rod.	2 Off
RG-6046	Push Rod.	2 Off
K-4010/Z	Nut.	2 Off

FOR INFORMATION:

PROTECTION TO THE SERVO AGAINST THE INGRESS OF WATER IN WET WEATHER.

Current Bentley chassis in production are provided with protection against the possible loss in servo efficiency in wet weather, due to water finding its way on to the friction surfaces.

This protection consists of an additional undershield, which is fitted over the existing triangular gap formed between the frame side member and the cruciform member forward of the battery container, together with a vertical baffle plate located just in front of the servo unit itself.

This modification is now offered as a chargeable improvement for fitting to existing models of earlier chassis, and its incorporation is recommended in all cases where servo inefficiency is traced to water on the friction faces.

The necessary instructions for fitting, together with the list of material required, will be found contained in this leaflet.

FITTING PROCEDURE.

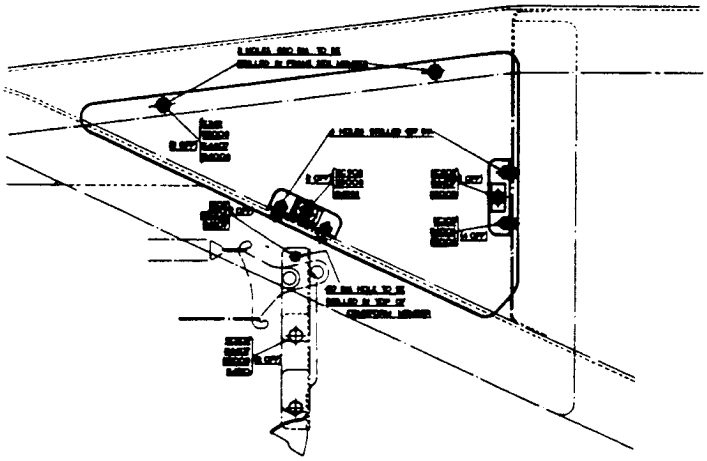

FIG. 1. FITTING OF UNDERSHIELD.

1. Place the car over a pit, or elevate on a suitable hoist.

2. Remove the battery.

3. Remove the existing right-hand rear undershield immediately below the servo unit.

4. Offer up the new undershield from below the chassis and cover the triangular gap formed by the frame side member and cruciform member forward of the battery container. Mark off the relative positions for the two bolt holes in the lower flange of the frame side member, also for the two supporting brackets as shown in Fig.1. Drill the two 0.250" dia. bolt holes in the frame side member.

5. Drill the blank flange of each bracket assembly to accommodate two 2-BA securing bolts respectively. Offer up the brackets in position on the cruciform and gusset respectively and mark off for the 2-BA securing bolt holes. Drill the two members accordingly and secure the brackets.
   NOTE: Certain chassis will be found to have these brackets already fitted.

6. Fit the new undershield.
NOTE: The enlarged bolt hole in the new undershield is to allow for variations in chassis construction and should correspond with the bracket on the cruciform member. A special plain disc washer is supplied to prevent the head of the securing bolt passing through the plate when this is fitted.

7. Offer up the baffle plate with its flanges towards the engine, forward of the servo unit, and mate the head of the leading rivet securing the spring clip to the top of the cruciform with the radiused slot cut in the top flange of the plate. Mark off the relative position for the 2-BA bolt hole in the top of the cruciform as shown in Fig.1. Drill accordingly.

8. Fit the rubber protection piece to the baffle plate as shown in Fig.2. Both the rubber and the retaining strip should be fitted on the ENGINE side of the plate, with the nuts for the securing screws on the obverse face.

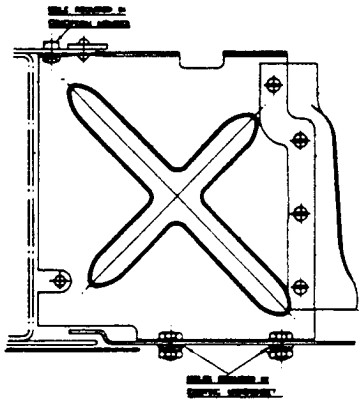

FIG. 2. BAFFLE PLATE.

9. Fit the baffle plate to the cruciform, and then reposition the existing rear undershield temporarily below the servo unit. Mark off the undershield to correspond with the two 0.250" dia.bolt holes in the lower flange of the baffle plate. Remove the undershield and drill accordingly. Refit the undershield and bolt this to the lower flange of the baffle plate,using the two set bolts provided.

MATERIAL REQUIRED.

RE.6977	Undershield.	1 Off
RE.6978	Baffle Plate.	1 "
RE.6979	Rubber Protection Piece-Baffle Plate.	1 "
RE.6999	Metal Retaining Strip-Protection Piece.	1 "
RF.3824 x	Undershield Support Brackets.	2 "
K. 1910	Setscrews-2 BA-Securing Protection Piece.	4 "
KC.902	Setscrews-0.250" - For Undershields.	4 "
K. 242	Bolts-Sqr.Hd.-Securing Undershield to Frame.	2 "
K. 102	Bolt-2 BA-Securing Baffle Plate to Cruciform.	1 "
KC.103 x	Bolt-2 BA-Securing Support Brackets.	4 "
K. 4307	Nuts-2 BA-For K.1910 & K.102.	5 "
K.4310	Nuts-Lock-0.250" dia.-For Baffle Plate to Undershield.	2 "
K. 4008	Nuts-Plain-0.250" dia.-Undershield to Frame.	2 "
K. 4006 x	Nuts-2 BA-Securing Support Brackets.	4 "
K. 9006	S.Washers-2 BA-For K.1910, K.102 and KC.103 (x)	9 "
K. 9008	S.Washers-0.250"-For Undershields.	6 "
R. 4292	Special Plain Washer-Cruciform Bracket to Undershield.	1 "
K. 4404	P.Washers-2 BA-For K.1910.	4 "
K. 4407	P.Washers-0.250"-For Undershields.	5 "

NOTE: Items above marked with anx to be ordered only when no brackets are fitted to chassis.

Further to the above, it is recommended that additional protection plates for the throttle control countershaft on the right-hand side frame member are also fitted whenever this modification is incorporated on early type chassis.

Due, however, to the fact that in a number of cases these plates have already been fitted in service, it is considered advisable for a preliminary check to be made before ordering the necessary material.

As a means of guidance, the exact locations for these plates are as follows:-

(a) Hand-hole in the side of the right-hand frame member just forward of the front body support bracket.

(b) Gap below the chassis frame formed by the frame side member, engine bearer and cruciform member.

In the event of these plates being necessary, they should be fitted in accordance with the instructions given below:-

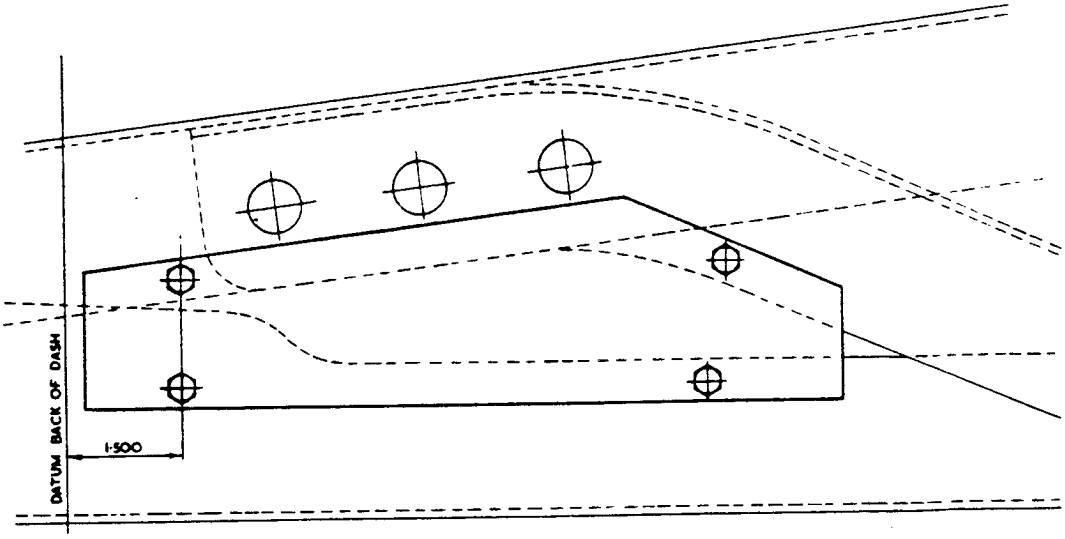

FIG. 1 FITTING OF UNDER-FRAME COVER PLATE.

1. Fit the under-frame cover plate (RF-6209) as shown in Fig. 1.

   a) Offer up the plate, and mark off the relative positions for the four retaining setscrews.

   b) Drill the four holes 0.1562" dia., and then tap 2 BA (31 T.P.I. R/H).

   c) Fit the cover plate.

PRINTED IN ENGLAND

2. Fit the hand-hole cover plate (RF-6213) as shown in Fig. 2.

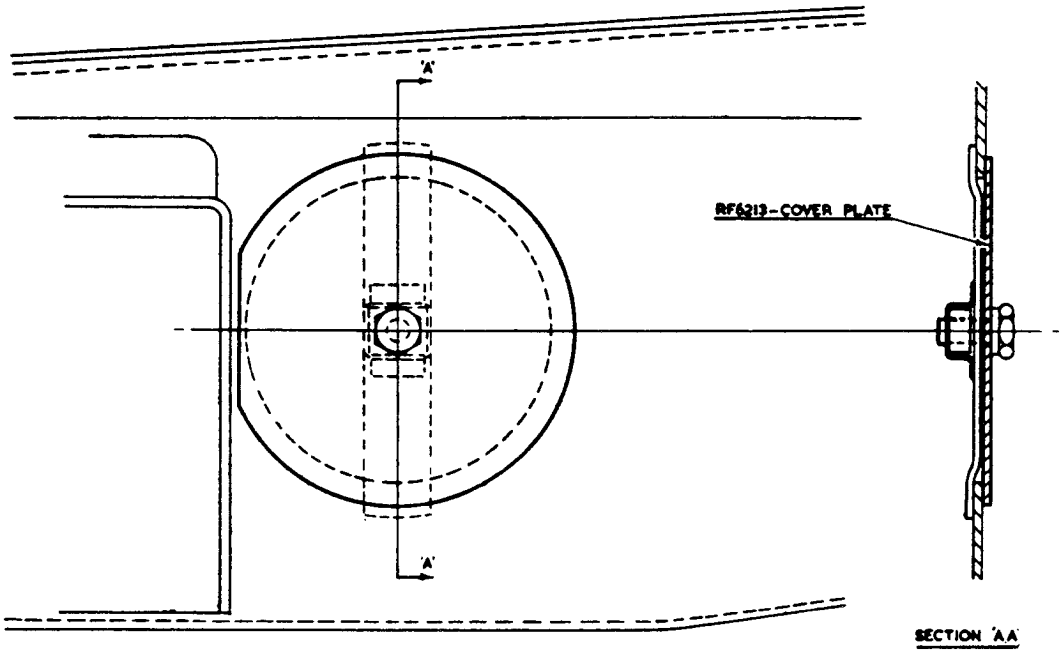

FIG. 2. METHOD OF FIXING COVER PLATE OVER HAND-HOLE.

MATERIAL REQUIRED.

RF-6209	UNDERFRAME COVER PLATE.	1 off.
RF-6213	HAND HOLE COVER PLATE.	1 off.
RF-6210	RETAINING PLATE ASSY. FOR HAND HOLE COVER PLATE.	1 off.
KC-151	SETSCREW - UNDERFRAME COVER PLATE.	4 off.
K-9006	WASHER - SPRING - FOR ABOVE.	4 off.
KC-278	SETSCREW - RETAINING PLATE ASSY.	1 off.
K-9009	WASHER - SPRING - FOR ABOVE.	1 off.

FOR INFORMATION:

FRONT BRAKES - RIGHT-HAND & LEFT-HAND DRIVE

("REVISED STEERING GEOMETRY".)

1. DESCRIPTION:

Commencing G Series, i.e. Chassis No.B-1-GT, and onwards, new front brakes are fitted which differ from the front brakes fitted to chassis prior to 'G' series, chiefly in the use of an internal hydraulic cylinder, which acts directly on the shoes in place of an external cylinder(expander) operating the shoes through a wedge mechanism.

The brake cylinder follows standard practice, and contains the usual two rubber cups and pistons, with expander spring between. The pistons act on the shoe tips through short push rods, which pass through rubber dust excluders in the ends of the cylinder. Unlike the previous brake, the cylinder body is rigidly attached to the carrier plate by three studs. The holes for the studs in the carrier plate are elongated so that the cylinder can be centralised during initial assembly, but after this operation has been carried out, the cylinder is securely locked to the carrier plate by fully tightening the studs. Although the cylinder body is fixed, the loads on the two shoe tips are nevertheless balanced by virtue of the column of oil between the two pistons.

The equal wear linkage between the two shoes also differs from the previous arrangement. The shorter of the two links is now eliminated, one arm of the balance lever being attached directly to the web of the trailing shoe, while a long link connects the other arm to the web of the leading shoe. (See Fig.1). The balance lever, instead of having a fulcrum consisting of a pin attached to the carrier plate, is pivoted on the end of a short push rod which butts against the cylinder body. The pull-off spring is also attached to the cylinder body, so that the whole assembly of shoes and inter-shoe linkage is mounted off the cylinder, and will slide bodily if the three studs attaching the cylinder to the carrier plate are loosened. The bedding of the two shoes can thus be equalised without any adjustment of the inter-shoe linkage being necessary, as was the case on the previous brake. The long link of the inter-shoe linkage is still adjustable, but this merely provides for an initial "sizing" operation to set the brake to the correct diameter over the linings to suit the drum. (See setting instructions.) The shoes have rather narrower webs than formerly, to provide a certain degree of flexibility. The same adjuster unit is used exactly as before.

2. SETTING INSTRUCTIONS:

When, during service, the front brake shoes have to be removed for replacement by a set of reconditioned shoes (new linings), or should it be found necessary to centralise the shoes in relation to the drum, the following are the setting instructions:-

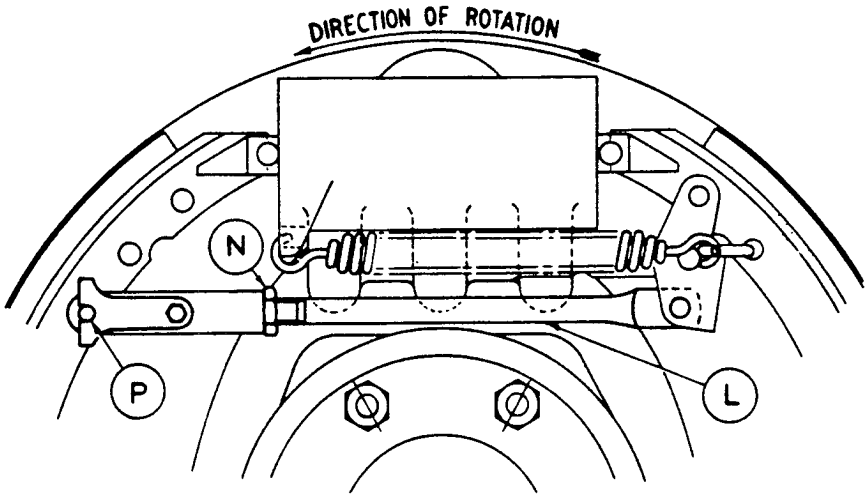

FIG. 1. DIAGRAM - SETTING INSTRUCTIONS - FRONT BRAKES.

(i) Build up the brake complete, but do not fit the locking plate for pin P, Fig. 1, or lock the nut N. For an initial setting, the link L, should be adjusted to 7.375" (187.3 m/m) between the pin centres.

(ii) Screw back the hand adjuster as far as it will go, and slacken off the two setscrews securing the adjuster unit to the carrier plate.

(iii) Slacken off the three nuts securing the hydraulic cylinder unit to the carrier plate, so that it is free to float.

(iv) Fit the brake drum to the hub. If the drum cannot be fitted over the shoes, lengthen the link L, until it can. This is most easily done by first detaching the pull-off spring, when the pin P can easily be withdrawn.

(v) With the drum in position, check the total number of "CLICKS" obtainable on the adjuster in bringing the shoes into contact with the drum, which should be between 9 and 15.

(vi) If more than 15 "CLICKS" are obtained, remove the drum, shorten the link L, and try again. If less than 9 "CLICKS" are obtained, lengthen the link L, and try again. One complete turn of the jaw on link L, corresponds to about 3 "CLICKS" of the adjuster.

(vii) When the correct length of link L, is obtained, and with the drum still in position, centralise the assembly by screwing up the adjuster until the shoes are hard against the drum and then fully tighten the three nuts securing the hydraulic cylinder unit to the carrier plate, and the two setscrew securing the adjuster unit to the carrier plate.

(viii) Slacken back the adjuster and remove the drum, fit the locking plate for pin P, and lock the nut N. Check that all other split pins etc. are correctly fitted, replace the drum.

3. EXTERNAL ADJUSTMENT:

When replacement shoes with new linings have been fitted during service and correctly adjusted, it should be noted that in order to allow for "growth" of the new linings due to temperature effects the external adjustment must always be set back six or seven "CLICKS" for the initial road test. Proceed as follows:-

(a) Rotate the adjusters in a clockwise direction until obvious resistance is felt. The resistance should be equal for the two brakes, and should the last "CLICK" on either adjuster require noticeably greater force to obtain, this adjuster should be turned back to the previous "CLICK". From this position, turn back the two adjusters from six to seven clicks.

(b) After the road test (bedding-in of linings), and before delivery to an Owner, again rotate the adjusters in a clockwise direction as described above and finally turn back each adjuster three "CLICKS".

(c) The Owners Handbook will still say two "CLICKS" as being the correct adjustment, but it is anticipated that the linings will have become stabilised before the Owner need have occasion to re-adjust the brakes.

(1) CATEGORY 2 ACTION: (Australia,S.Africa & S.America ONLY).

(2) FOR INFORMATION: (Home and Remainder of Overseas Retailers).

REAR BRAKE EQUALISER SUPPORT

Instances have occurred where the rubber support (RG-3552) for the rear brake equaliser bar has fractured on existing Bentley Mark VI cars in service.

In order to obviate this a modified type of support assembly has now been introduced for incorporation under the following conditions:-

(a) Australia,S.Africa & S.America ONLY:- Modified support assembly to be incorporated when car comes in for service, irrespective of the condition of the existing rubber support.

(b) Home & Remainder of Overseas Retailers:-Modified support assembly to be fitted ONLY when the existing rubber support requires replacing in service.

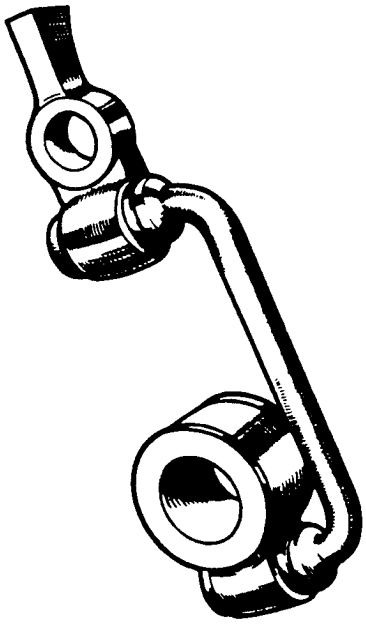

FIG. 1. MODIFIED TYPE SUPPORT

The modified type support assembly, illustrated in Fig.1 above,consists of a "U" shaped metal link, which is retained at either end by brackets in silentbloc bushes. The upper bracket has a radiused face to correspond with the outside of the rear axle tube, while the lower bracket carries another silentbloc bush through which the equaliser bar passes.

FITTING PROCEDURE

(1) Disconnect the existing rubber support from the rear axle tube at the top, and then remove the equaliser bar from the car. (N.B. In certain cases small brass distance pieces will be found fitted on the forward retaining pin at the front end of the bar. These should be refitted in identical manner when re-assembling the bar).

(2) Remove the existing rubber support from the equaliser bar, and then clean off all mud and dirt from the bar to facilitate the fitting of the new assembly.

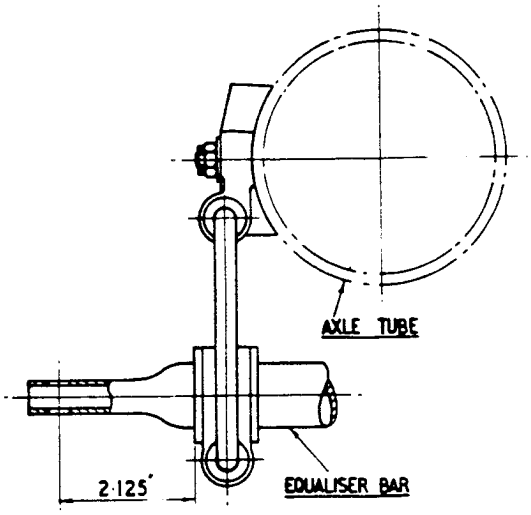

FIG. 2. FINAL POSITION FOR MODIFIED SUPPORT.

(3) Thread on the new support assembly from the front end of the equaliser bar, and slide the assembly along the bar until the outer face of the silentbloc bush is exactly 2.125" distant from the centre of the bolt hole at the rear of the bar (See Fig. 2. above). Due to the interference between the rubber bush and the bar, it is recommended that some form of lubricant, e.g. French chalk or soap, is used to facilitate sliding the assembly along the bar.

(4) Fit the upper bracket to the existing stud on the axle tube, replace the existing plain washer (distance piece), and then secure by means of the thinner castellated nut provided, locking this by fitting a new 1/16" split pin. Reconnect the equaliser bar.
NOTE:- Constructional variations in the rear axle tube may result in

a "forging flash" preventing the radiused face of the upper support bracket seating correctly when finally assembled. In such cases the "forging flash" should be removed from that part on which the bracket seats to ensure a true bedding between the two mating faces. Under NO circumstances must any metal be removed from the radiused face of the upper bracket as this has been filed to a gauge prior to delivery.

MATERIAL REQUIRED

PART NO.	DESCRIPTION.	NO. RQD.
RG.5460	Assy. Rear Brake Equaliser Support.	1 off.
KB.3637	Castellated Retaining Nut - Support (Axle tube)	1 off.
K.4602	Split Pin 1/16" x 3/4" long.	1 off.

CATEGORY 2 ACTION:

ADDITIONAL PROTECTION FOR THE SERVO AND SIDE CHANGE GEAR MECHANISM.

(STANDARD STEEL SALOONS ONLY)

Investigations have shown that the deletion of the dashboard side mounting brackets (Service Bulletin BB-115) renders it possible in wet weather for water to reach the servo motor and gear change mechanism through the gap between the front of the body and frame member.

To obviate this, additional protection for these components has been provided on current chassis in production from B-229-LH onwards, and Retailers are requested to take the necessary retrospective action to ensure that this is also incorporated on earlier model Standard Saloons in their areas on which these brackets have been deleted. (N.B. The deletion of the dashboard side mounting brackets on Standard Steel Saloons was first effected in production at Chassis No.B-153-JN. The chassis numbers involved are therefore from B-153-JN to B-227-LH inclusive, plus all other cars on which these side mounting brackets have been removed in service).

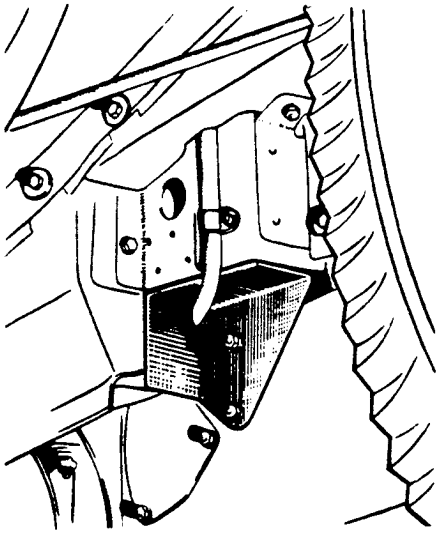

This protection consists of a flanged plate (Part No.RF-8881) which is fitted in the position originally occupied by the lower dash mounting bracket on the right-hand side of the chassis as shown in the above illustration. The existing bracket mounting holes in the frame are used for fixing the plate, and it should be noted that when this is finally fitted, there must be a clearance of approximately 0.187" between the top and rear flanges and the dash and body respectively. The two bolt holes drilled in the plate itself are of a slightly larger diameter than the retaining bolts supplied thus permitting a certain degree of adjustment when fitting the plate.

MATERIAL REQUIRED

RF-8881	Protection Plate.	1	Off	K-4310/Z	Nut	2	Off.
KO-204/Z	Retaining Bolts for above-0.250"dia.	2	"				
K -9008/Z	Spring Washer	2	"				
K -4407/Z	Plain Washer	2	"				

Cancels BB-186 dated 15.4.54.

FOR INFORMATION:

SEALING THE BRAKE SERVO MOTOR.

In order to prevent the possibility of oil seepage into the servo motor, the joint between the flange of the spring backing plate and the pressure plate is being coated with "Wellseal" on current production. "Wellseal" is a sealing compound with a rubber solution base which remains soft and pliable when dry.

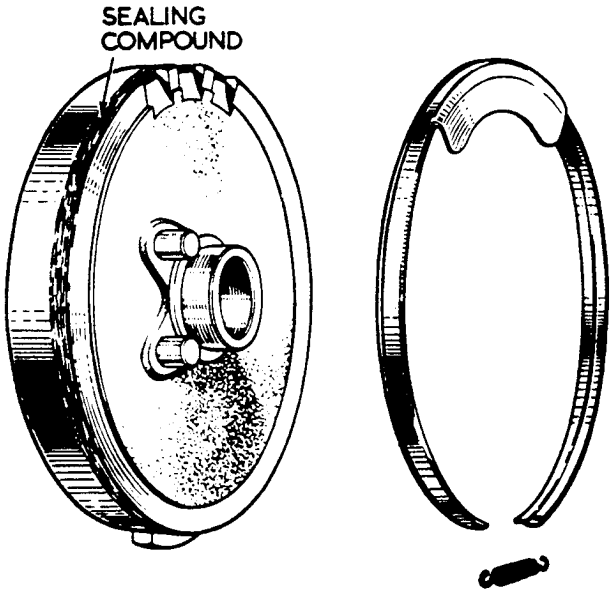

Retailers are advised that, whenever a servo motor is removed for overhaul or other reason, it should be treated with "Wellseal" or an equivalent compound. After assembling the servo in the usual way, but before fitting the protector ring, the compound should be applied with a thin brush as shown in the illustration.

No further sealing is necessary. The drain holes at the bottom of the spring plate flange and the ventilation slots at the top of the pressure plate, which are covered by the water excluder attached to the protector ring, must be kept clear.

Tins of "Wellseal" are available from the London Service Station, or direct from Messrs Wellworthy Ltd, Radial Works, Lymington, Hampshire., for use in the United Kingdom.

For overseas use the Minnesota Mining and Manufacturing Coy's EC.802 Sealer is recommended. This can be thinned down by the addition of Methyl Ethyl Ketone in order to facilitate application. The thinner is available from most manufacturing chemists. A list of oversea Distributors from whom EC.802 Sealer may be obtained is attached.

Country.	Distributor.
LEEWARD ISLANDS.	L.J.Williams Marketing Co.Ltd., 41, Orange Street, Kingston, Jamaica, B.W.I.
ARGENTINA.	"Eberson" Soc.Resp.Ltda., Belgrano 1670, Buenos Aires.
ARUBA.	Moises de Marchena & Sons, Wilhelmenastraat 11, Oranjestad, Aruba, N.W.I.
AUSTRIA.	Otto Winds, Melkengasse 6, Vienna, 6.
BAHAMAS.	L.J.Williams Marketing Co.Ltd., 68, Marine Square, Port of Spain, Trinidad.
BARBADOS.	Gordon, Grant & Co.Ltd., 404, Plantations Bldg., Broad Street, (P.O.B.280).,Bridgetown.
BELGIUM CONGO.	Drinkwater Automotive Eng. Works Ltd., Dawson St., UMTALI, S.Rhodesia.
BELGIUM.	Willy Sturm, 42, rue Locquienghien, Brussels.
BERMUDA.	Ambard & Company, Reid Street, Hamilton.
BOLIVIA.	Garcia, Mendieta y Cia, S.A., Casilla Correo No.958, La Paz.
BRITISH GUIANA.	L.J.Williams Marketing Co.Ltd., Robb & High Street, Georgetown, Demara.
BURMA.	Gillanders Arbuthnot & Co., P.O. Box 845, Rangoon.
CEYLON.	Muller & Phipps (Asia) Ltd., Negris Bldg., York Street, Colombo.
CHILE.	Perez, Reitze y Benitex, Casilla 2482, Calle Santa, Rosa 15, Santiago.
COLUMBIA. (Except for Western States).	Ivar Hilstad & Cia. Ltd., Apartado Aereo 119, Barranquilla.

Country.	Distributor.
COLUMBIA. (Western States)	Rojas Hermanos Ltda., Apartado Aereo 1313, Cali.
COSTA RICA.	Enrique Herrero & Cia. Ltda., Apartado 677, San Jose.
CUBA.	Casa Rex-tone, Neptuno 1060, Havana.
CURACAO.	Moises de Marchena & Sons, P.O. Box 72, Willemstad.
DENMARK.	J.A.Wallin, Sct. Kjudsvej 22, Copenhagen.
WINDWARD ISLANDS.	L.J.Williams Marketing Co., Jamaica.
DOMINICAN REPUBLIC.	Dominican Motors Co., La Cotolica-E. Tejera, Ciudad Trujillo.
ECUADOR.	Luis Vallejo Araujo, Chemborazo 406, P.O.B. 717, Guayaquil.
FINLAND.	Oy Gronblom Ab. S.Esplanadgatan 14, Helsinki.
FRENCH MOROCCO.	Societe Africaine d'Achats et de Representations Industriales, 22, Rue de lay Haye, Casablanca.
GREECE.	J.P.Combis, Athinas Street, 17-D, Athens.
GUATEMALA.	Escarra Ymbert & Cia. Ltda., Apartado 302, Guatemala City.
HAITI.	Haytian American Industrial, Development Co. S.A., Port-au-Prince.
HOLLAND.	Pieterson & Wildenberg, Maasdamstraat, 2, Rotterdam.
HONDURAS.	Quinchon Leon & Cia., Teguciagalpa, D.C.
ICELAND.	G.Thorsteinsson & Johnson, P.O. Box 881, Grjotagotu, Reykjavik.

Country.	Distributor.
INDIA.	Gillanders Arbuthnot & Co., 3, North Beach Road, P.O.B. 261, Madras.
INDO - CHINA.	East Asiatic Co.Ltd., Saigon, Viet-Nam.
INDONESIA.	Kian Gwan Co., Asemka 18, Kjakarta.
IRELAND.	Rutledge & Thompson Ltd., 3, Corn Exhcange Place, Dublin, C.5.
ISRAEL.	Israel General Automotive Supply, 25, Hakinshon St., P.O.Box 5184, Tel Aviv.
ITALY.	Vagnone & Boeri, 9-11, Via Bogino Torino.
BRITISH WEST INDIES.	L.J.Williams Marketing Co.Ltd., Jamaica.
JAPAN.	International Aviation Asscts., 34, Uguisidani-cho, Shibuya-ku, Tokyo.
KENYA COLONY.	Gilfillan & Co.Ltd., P.O.Box 644, Nairobi.
KOREA.	American Trading Co. Inc., 96, Wall Street, New York City, N.Y.
LEBANON.	Michel Andraos, P.O. Box 447, Beirut.
MOZAMBIQUE.	Gandra & Lagoa, Ltda., Rue Duque de Terceira 315, Porto, Portugal.
NEW ZEALAND.	John Chambers & Sons Ltd., 41, Fort Street, Auckland, C.I.
NICARAGUA.	Eric Clerk & Cia. Ltda., P.O.B. 446, Managua.
NORWAY.	C.Frimann-Dahl A/S, Dronningensgt, 10-12, Oslo.

Country.	Distributor.
NYASALAND & RHODESIA.	Drinkwaters Auto. Eng. Wks., Dawson Street, UMTALI, S.Rhodesia.
PAKISTAN.	Muller & Phipps (Pak.) Ltd., 172, Napier Road, Karachi.
PANAMA.	Empresas Panamenas S.A., P.O.B. 3348, Estafeta, No.1.
PERU.	Dupont Peru, S.A., Edificio Tecna. Avenida Tacna, 592, Apartado 2787, Lima.
PERSIAN GULF.	A.A.Zayani & Sons, P.O. Box 32, Bahrein.
PHILIPPINES.	Muller & Phipps (Manila) Ltd., Bonifacio Drive, Port Area, P.O. Box 950, Manila.
PORTUGAL.	Gandra & Lagoa, Ltda., Rue Duque da Terceira 315, Porto.
EL SALVADOR.	Thoresen & Co. P.O.B. 267, San Salvador.
SINGAPORE.	Kian Gwan (U.K.) Ltd., United Dominions Hse., 53, Eastcheap, London, E.C.3.
SOMALILAND.	Gilfillan & Co., P.O.B.644., Nairobi, Kenya Colony.
SOUTH AFRICA.	Wlt. McNaughtan & Co. (Pty) Ltd., P.O.B. 8666, Johannesburg.
SWEDEN.	Landelius & Bjorklund, 6A, Bryggargatan, Stockholm.
SWITZERLAND.	Wahl & Lehmann, Sihlquai 55, Zurich 5.
SYRIA.	Automotive & Industrial Eqp., Co. P.O.Box 89, Damascus.
TANGANYIKA.	Gilfillan & Co., P.O.B. 644, Nairobi, Kenya Colony.
THAILAND.	Kian Gwan Co., (Thailand) Ltd., " " Building, 203, Suriwongse Rd., Bangkok.

Country.	Distributor.
UGANDA.	Gilfillan & Co., Ltd., P.O.B. 644, Nairobi, Kenya Colony.
URUGUAY.	Varela Radio & Cia., Cerro Negro 999, Casilla Correo, 417, Montevideo.
+VENEZUELA.	Importadora Cientifica S.A., P.O. Box 2083, Caracas.
YUGOSLAVIA	Otto Winds, Nelkengasse 6, Vienna V1, Austria.

FOR INFORMATION.

REGRINDING BRAKE DRUMS.

Retailers are advised that brake drums may be reground to remove scoring or to restore a true diameter in accordance with the data given below. Regrinding should not normally be required unless ovality exceeds .010" - .015" (.25 to .38 m/m).

Standard Internal Diameter of Drum (All chassis series - Front and Rear)	12.250" (31.115 c/m)
Grinding Limit	.050" (1.27 m/m)

A stone $3\frac{1}{2}$" x $1\frac{1}{4}$" x $\frac{1}{2}$" of grade 60 N.V. is recommended. Only the minimum amount of metal necessary to achieve a smooth, clean surface should be removed. Oversize brake shoe linings are not required.

FRONT BRAKE HOSES.

In the interests of safety, it has been decided to specify definite mileages at which front brake hoses should be re-newed. This Bulletin gives details of the types of hoses that have been fitted and of the replacement action necessary.

Types of Front Brake Hose.

Four different types of hose have been fitted on production. Chassis Numbers at which the changes took place are not recorded but approximate dates are given for guidance. The hoses are, however, readily distinquishable and are listed below in chronological order of fitting.

1. A smooth skinned hose of 9/16" (14.3 m/m) diameter. Fitted from commencement of production until August 1948.

2. A smooth skinned hose of .430" (10.9 m/m) diameter, having greater flexibilty. Fitted from August 1948 to February 1950.

3. A hose with a chevron patterned skin of .430" (10.9 m/m) diameter, having larger end connections. Later editions of this hose carried a green plastic band indicating that it had been subjected to increased pressure tests. Fitted from February 1950 to November 1953.

4. A chevron patterned hose, as in 3, carrying a yellow plastic band, indicating a change from two to three ply and an increased barrelling of the end connections. Later editions of this hose have the figures L2 stamped on the hexagon indicating that the hose conforms with an agreed SAE specification. Fitted from November 1953 to date.

Action and Charges.

1. Hoses of types 1,2, and 3 should be replaced by hoses of type 4 after 20,000 miles (32,000 kilometres).

   Retailers are asked to carry out replacements in accordance with the mileage travelled, as cars come in for service. If the car is still within the guarantee period, charges may be submitted to the company in the usual way. A time of $2\frac{1}{2}$ hours will be allowed for changing two hoses, bleeding the brakes and road testing.

   If out of guarantee, material and labour are chargeable to the owner.

2. Hoses of type 4 should be re-newed after 40,000 miles. This mileage corresponds approximately to the mileage at which brakes are normally re-lined and charges should, therefore, be included with the re-line charge.

Parts Required.

RG.8484	Hose, Bracket to Brake Cylinder	2 Off.

It is appreciated that the life of a hose cannot be accurately predicted in varying conditions of service but it is felt that Owners will welcome the assurance that a replacement scheme of this nature will provide. Retailers co-operation in implimenting it is strongly requested.

Cancels BB-210 dated 11.2.55 and 29.8.56.

FOR INFORMATION.

SERVO JUDDER AND INEFFICIENCY.

A corrugated washer, Part No. R.5037, has been developed to overcome cases of servo judder on brake application. The washer is fitted between the brake actuating levers in place of the plain washer GB.5083 and effectively damps the servo output to prevent minor fluctuations in the brake linkage from developing into judder.

Retailers should fit the washer in all complaints of servo judder but, at the same time, check that obvious causes, such as air in the hydraulic system, maladjustment of the brake linkages and deterioration of the servo motor linings, are not responsible for the condition.

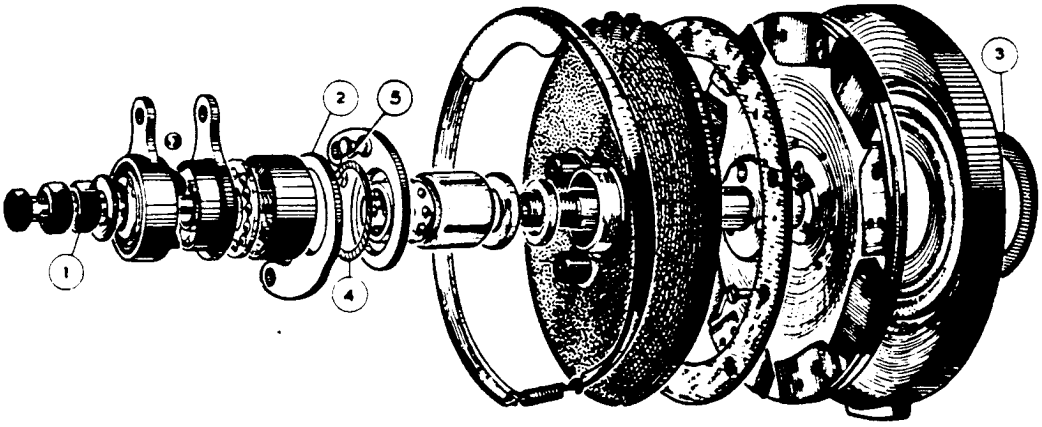

FIG.1. EXPLODED VIEW OF SERVO MOTOR.

1. Adjusting Nut.
2. Brake Actuating Levers.
3. Ferodo Washer (To be replaced by R.5285 if necessary).
4. Plain Washer GB.5083 (To be replaced by R.5037).
5. Spring Clip (To be removed).

On all early series cars the corrugated washer can be fitted without further modification, except from approximately B-152-UM onwards when the loading of the servo motor spring back plate was increased from 25 to 40 lbs. With the heavier load spring plate a thinner servo drive sealing washer R.5285 must be fitted in place of the Ferodo washer between the spring plate and the gearbox. This ensures that the combined end thrust of the spring plate and corrugated washer is not sufficient to prevent the brake actuating levers from returning to their off-stop on releasing the brake pedal.

1. From approximately B-311-YA and onwards a spring clip was fitted to the upper brake actuating lever to eliminate servo "clonks", this will have to be removed if it fouls the corrugated washer when compressed.

2. Under certain circumstances it has been found that owing to servo manufacturing limits, difficulties have arisen in fitting the corrugated washer, and in order to overcome this, and to ensure a long service life, the following method of fitting is to be employed.

The complete servo motor is to be removed, dismantled, and a packing washer approximately .0625" thick placed between the pressure plate

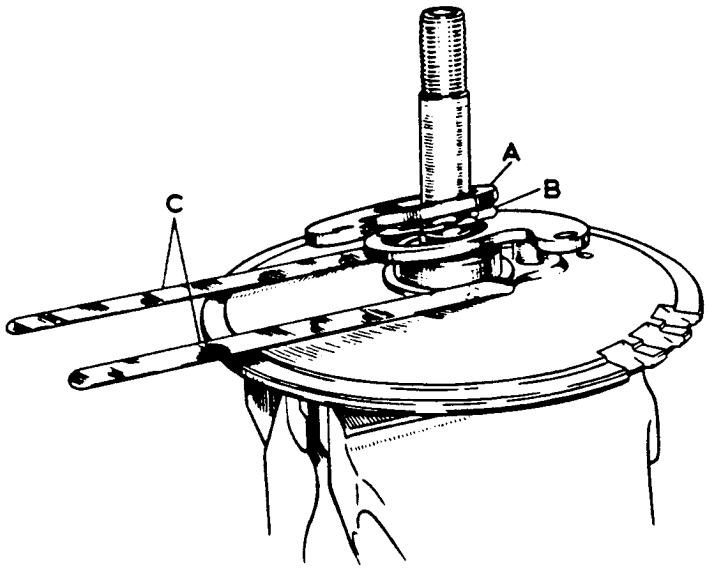

FIG.2.
A. Brake Actuating Lever. B. Servo Washer (R.5037).
C. Feeler Gauges.

and the flange on the servo shaft. The servo is then placed in a vice as shown (Fig.2), the corrugated washer fitted into position, and the servo assembled. The adjusting nut is tightened fully home, thus compressing the corrugated washer.

A spring balance is then attached to the brake actuating lever and the poundage figure accurately taken; this must be between 12 and 20 lbs (Fig.3).

If the figure is too high, the adjusting nut must be slackened, two feeler gauges (approximately 0.002" for every 5 lbs in excess poundage) placed between the lower brake actuating lever and the servo pressure plate and the adjusting nut tightened fully once more. This will compress the corrugated washer still further, so that when the feeler gauges are removed

and the adjusting nut re-tightened, a lower poundage figure will be recorded. This must be done, by increasing the feeler gauge thickness, until the brake actuating lever poundage is satisfactory.

Finally, remove the .0625" washer and re-assemble servo motor.

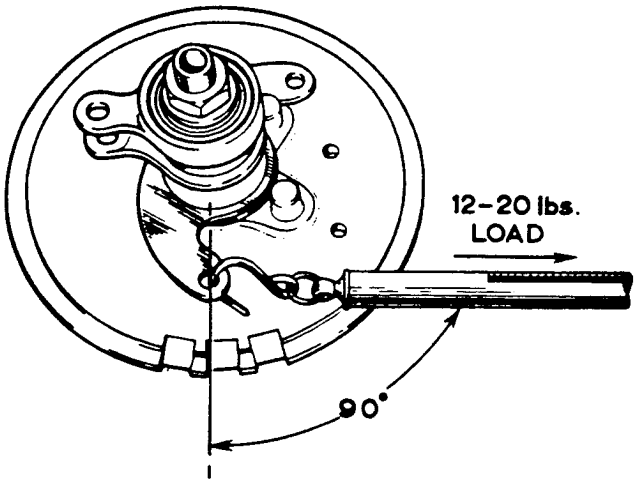

FIG.3.

3. Adjust the servo in the normal way as follows :-

   (a) Apply the handbrake so that the servo can be rocked backwards and forwards.

   (b) Tighten the adjusting nut until friction can just be felt between the pressure plate and the lined plate when rocking the servo. Slacken back the adjusting nut 1/3 of a turn, this should give approximately .018" (.45 m/m) clearance between the pressure plate and the lined plate. Press the pedal once to ensure that the outer cam lever has followed back with the nut. Lock the adjusting nut by tightening the outer nut.

4. Check that the pedal travel required to open the cam levers is between $\frac{3}{8}$" and $\frac{5}{8}$".

5. Jack up the rear of the car and start the engine. Run in top gear at about 20 m.p.h. and apply the brakes. Check that on release the brake actuating levers return to their off-stops, allowing the balance lever assembly to return and the master cylinder to recuperate.

   If the thrust applied by the spring plate and the corrugated washer is too great, friction may prevent the two brake actuating levers from returning when the brakes are released. This will only occur if the servo is incorrectly adjusted or if the more heavily loaded spring plate is also fitted with the original Ferodo washer. A buckled or distorted spring plate must be renewed.

PARTS REQUIRED.

R.5037	Corrugated Washer - Servo	1 off.
R.5285	Sealing Washer - Servo Drive	1 off.(If required)

SERVO INEFFICIENCY.

Whenever a servo is overhauled following a complaint of inefficiency which is found due to oil or water contamination of the liner and when there is no obvious source of leakage such as from the servo main shaft seal, the engine or chassis lubrication systems, or water leakage from the cooling system, the servo is to be completely sealed with the special rubber seal RH.377.

To do this the water drain on the servo spring back plate must be removed; this is simply done on 'R' type motor cars by unsweating, and on earlier series cars by removing the three .062" securing rivets.

The holes in the rim of the spring plate are then to be filled with solder which is best done by tinning the inside of the rim, resting the spring plate holes downwards on a sheet of asbestos, so that the solder is prevented from running through and building up on the outside of the rim.

The solder is then smoothed over and the spring plate re-painted with high quality air drying chassis black.

FITTING INSTRUCTIONS.

The servo spring plate, lined plate, pressure plate and servo main shaft are to be put together so that after the seal has been fitted the servo can be completely re-assembled and re-fitted, (Fig.4).

With the pressure plate uppermost, the rubber seal is placed on top with the flap covering the ventilating slots. The rubber seal is then placed right over the rim edge at the ventilating slots and without stretching, held there, then the opposite side is to be eased right over

the edge of the plate, not by pulling on the outer edge of the seal as might be expected, but by pulling on the inner diameter; this prevents distortion of the outer periphery. The rest of the seal is then eased into position, still pulling on the inside diameter until the inner periphery fits closely into the spigot running around the upper face of the pressure plate. The whole seal is then to be eased into position finally and retained by the protector ring which must be fitted with the lower rate spring RH.135, otherwise it will not fit over both the seal and the pressure plate. The spring is to be positioned towards the rear of the car and not to the lowermost position as was usual. On certain servos the ends of the brake actuating lever operating pins will be open; these must be sealed with two corks (Fig.4).

The servo can then be re-fitted to the car, the seal being finally checked after road test.

NOTE: It is not possible to use the rubber seal more than once, nor is it possible to use the seal if it has been stretched in an unsuccessful attempt to fit it.

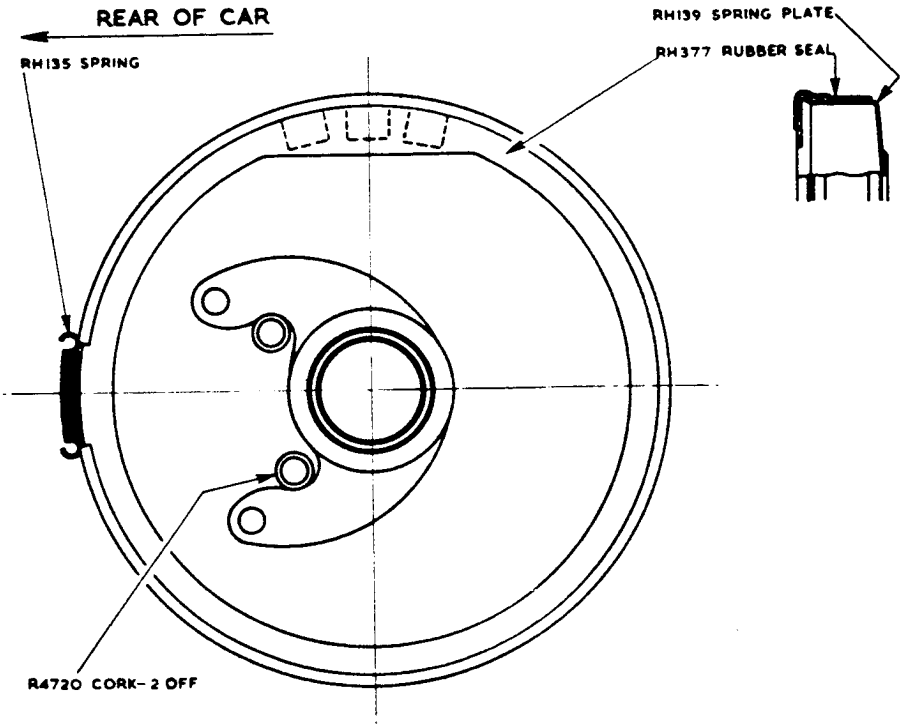

FIG.4.

PARTS REQUIRED.

Rubber Seal	RH.377.	1 off.
Protector Spring	RH.135.	1 off.
Sealing Cork	R.4720.	2 off.

The time permitted for fitting the corrugated washer is $3\frac{1}{2}$ hours, and the time for fitting the rubber seal is also $3\frac{1}{2}$ hours, but where both modifications are done together the time allowed is 4 hours.

FOR INFORMATION:

LOCKHEED FRONT BRAKE EXPANDERS & MASTER CYLINDER

(CHASSIS NO.B-1-GT ONWARDS AND CONTINENTAL)

1. FRONT BRAKE EXPANDERS:

Some instances have occurred of brake troubles which have been due to leakage of brake fluid from the internal front brake expanders. Upon investigation, the bores of the expanders were found to be scored or corroded, while some of the rubber cups (Fig.1) were found to be devoid of radial pressure due to being a slack fit in the bores; this will permit air ingress to the hydraulic system causing subsequent complaints of servo judder, inefficient brakes or brakes pulling to one side. Excessive loss of brake fluid from the system can of course render the brakes inoperative.

If upon removal of the front brake drums, there are signs of brake fluid leakage, the expander should be removed for examination.

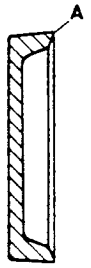

Fig.1.Section-Rubber cup. Expander.

The removal, dismantling and re-assembling of the expanders is described in Section J, Sub-Section RDJ-5 of the Rolls-Royce Silver Dawn Workshop Manual.

(i) If an expander bore is scored and/or corrosion pitted,a new unit should be fitted. Retailers in the United Kingdom only,should return the original one to the London Service Station. Where a bore has only slight scratch markings, it should be polished with Durex abrasive paper, Grade No.240. It is essential that a bore has a perfectly smooth finish and free from corrosion marks.

(ii) Fit two new rubber cups (RG-5254) which should be a light push fit in the bore and renew the rubber dust covers (RG-6183) if deteriorated.

2. MASTER CYLINDER:

There have also been cases of ingress of air into the system due to non-sealing of the rubber valve washer 'F' Fig.2. against the face 'D' at the outlet end of the cylinder. The sealing lip 'A' Fig.1. of the rubber cups in the front brake expanders is normally held in firm contact against the bore of the expander by a residual hydraulic pressure of about 12-14 lbs.per sq/in. created by the spring loading of the return valve illustrated in Fig.2. Should this valve fail to maintain the hydraulic pressure, air may enter past the cups of the expanders owing to the comparatively low pressure exerted by the cups themselves against the bore.

Examination revealed that the primary cause of the valve washer 'F' not seating correctly, was due to the diameter of the face 'D' of the master cylinder being too small, causing the valve washer to make heavy contact with the rough un-machined tapered sides 'C' of the cylinder resulting in excessive wear and distortion of the valve washer.

The afore-mentioned also causes servo judder, inefficient brakes or brakes pulling to one side.

Where faulty operation of the master cylinder itself is suspected, it should be removed for examination.

The removal, dismantling, re-assembling and a general description of the master cylinder is detailed in Section J, Sub-Section RDJ-4 of the Silver Dawn Workshop Manual.

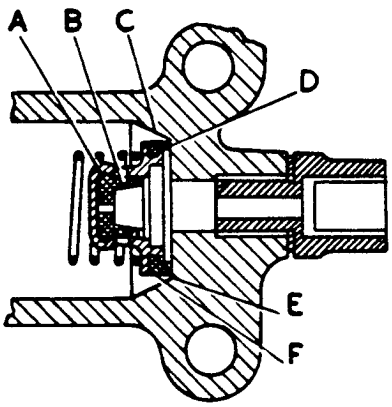

Fig.2. Section-Return valve assy. master cylinder.

(i) Fit a new rubber washer 'F' (RG-7043) and a rubber cup 'B' (CD-130) to the valve body 'A'. Place the coil spring on to the valve and enter into the cylinder and check that the valve assembly has a diametrical movement of approximately 0.020"(0.50 m/m) to ensure that there is sufficient clearance between the outer diameter of the valve washer at point 'E' and the cylinder.

If the valve assembly cannot be moved as above, it will be necessary to fit a new master cylinder. Retailers in the United Kingdom only, should return the original one to the London Service Station; this also applies if the cylinder bore is scored or corrosion pitted. Where a bore has only slight scratch markings, proceed as described for a front brake expander.

(ii) Fit a new rubber master cup (R-3952) which should be a light push fit in the bore.

(iii) Fit a new rubber secondary cup (R-3951) to the rear end of the piston.

(iv) Renew the rubber dirt excluder (RG-7028) if deteriorated and re-assemble the master cylinder in accordance with Para.4. of Sub-Section RDJ-4.

CATEGORY 2.

REPLACEMENT OF SERVO PUSH ROD BELLCRANK LEVER.

On left hand drive vehicles the brake linkage to the servo differs from right hand drive models in that the brake pedal is not linked direct to the servo, but to a bellcrank lever in line behind it, which transmits fore and aft motion transversely across the car to another bellcrank lever in line behind the servo, which in turn transmits the motion forward to operate the servo via a push rod.

When the brakes are applied and released, the servo operating levers are rocked back and forth, raising and lowering the end of the servo push rod, but at the same time the clevis joint between the servo push rod and the bellcrank lever permits only rotary movement to the bellcrank lever about a vertical axis, and does not allow for vertical movement to the push rod. This consequently causes the load when braking, to strain the clevis joint, which may eventually cause fatigue failure of the servo push rod where it screws into the clevis jaw.

In order to overcome this possibility, a new bellcrank lever UG.2280 having a semi-universal bearing for the push rod clevis pin, is to replace the original lever.

The recommended manner of fitting the new bellcrank lever is firstly to remove the split pin from the servo push rod clevis joint and disconnect the clevis jaw. The bellcrank can then be rotated so that the split pins in the clevis joint of the pull rod from the other bellcrank lever, and in the pivot of the bellcrank lever can be removed, allowing the bellcrank pull rod to be disconnected and leaving the bellcrank pivot pin free.

It will not be possible to withdraw the bellcrank pivot pin until the cross stay between the two bellcrank brackets is demounted by removing the two 7/16" securing nuts and bolts, and the four ¼" B.S.F. nuts and bolts securing the bellcrank bracket to the frame are removed to allow the bracket to be displaced sufficiently for the bellcrank lever central pivot pin to be withdrawn from the top.

The bellcrank pivot pin is to be smeared with "Retinax" or similar grease, the new bellcrank lever fitted and the bracket and cross stay bolted to the frame once more. The bellcrank lever pull rod is next to be reconnected, the new clevis jaw fitted to the servo push rod, and the longer clevis pin fitted. The brake linkage is then to be finally adjusted and the three split pins fitted.

To identify that this modification has been incorporated, the servo push rod is to be marked with yellow paint.

The time allowed for this work is three hours.

MATERIAL REQUIRED:

Bellcrank lever assembly	UG.2280.	1 off.
Clevis jaw (servo push rod)	KB.1114/Z.	1 off.
Clevis pin (servo push rod)	RG.4405.	1 off.
Split pins	K.4643/Z.	3 off.

CATEGORY 3

SERVO MOTOR SEALING

It has been found that the effective life of the servo liner may be greatly reduced, due to contamination by oil or water from various sources.

In order to ensure the fullest possible life, the servo motor sealing has been improved on production cars. Existing cars should be modified and brought to this standard, whenever a servo is dismantled.

Where inspection of the liner shows the presence of oil, the source of oil leakage must first be ascertained and rectified.

Before re-assembling, the following modifications are required, if not already incorporated.

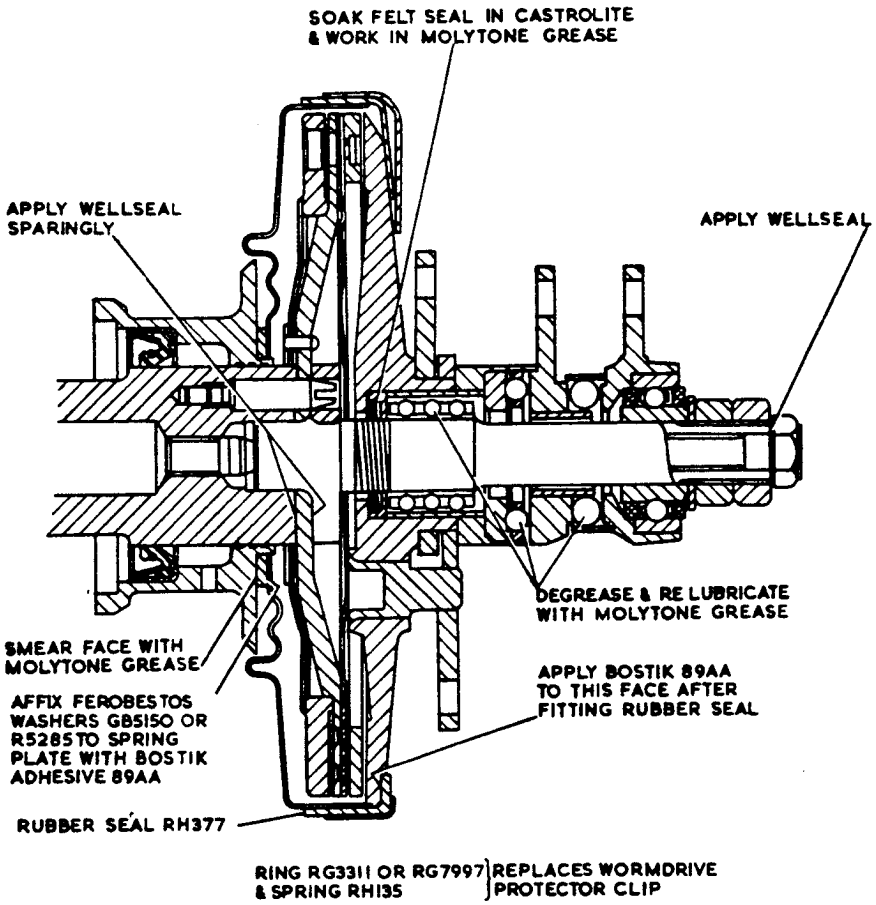

FIG. 1.

1. Remove the water drain on the servo spring plate, this is simply done by unsweating.

   Blank off the spring plate drain holes located in the rim, by filling with solder. This is best done by tinning the inside of the rim, resting the spring plate holes downwards on a sheet of asbestos, so that solder is prevented from running through and building up on the outside of the rim. The solder is then smoothed over and the spring plate repainted with a high quality air drying chassis black.

2. Degrease thrust race, operating lever cams and pressure plate ball race ensuring that they are thoroughly clean and free from grease.

   Re-lubricate with Molytone Grease.

3. Renew and soak felt washer (located in pressure plate) in engine oil and lightly coat with Molytone Grease.

4. Apply Wellseal sparingly to the end face of the servo drive shaft, both sides of the centre of the inertia plate, to the end face and driving pins of the servo driven shaft and under the head of the servo retaining setscrew, after ensuring that all surfaces are free from oil or grease.

   A pencil brush may be used for all application of the Wellseal.

   Allow at lease five minutes for air drying before assembling the joints.

5. Apply Bostik Adhesive (89AA) to one face of the Ferobestos seal and stick to the spring plate, lightly smear Molytone Grease on the outer face of the Ferobestos seal.

6. With pressure plate uppermost, place the rubber seal on top with the flap covering the ventilating slots and ease the seal over the rim edge without stretching. Hold there, easing the opposite side over the plate edge.

   It is essential that the pulling is limited to the inner diameter, only, thereby preventing distortion of the outer periphery. Ease the remainder of the seal into position until the inner periphery fits closely against the machined surface.

   By carefully lifting the rubber seal which overlaps the ventilating slots and machined surface, apply Bostik to the inner face of the seal, a small area at a time, until the complete circumference of the inner face has been treated in this manner.

Allow Bostik to set for approximately one hour before using the car.

7. Fit the protection ring (RG.7797 or RG.3311) with the lower rate spring (RH.135). Position the spring towards the rear of the car and not to the lowermost position as was customary with earlier cars.

Seal the ends of the brake actuating lever operating pins with 2 corks (R.4720) if open.

NOTE:

(a) It is NOT possible to use the rubber seal more than once, nor is it possible to use the seal if it has been stretched in an unsuccessful attempt to fit it.

(b) Trichlorethylene applied to the Bostik will assist easy separation when required.

PARTS AND MATERIAL REQUIRED

Description	No.Off.
Bostik Adhesive (89AA)	
Molytone Grease	
Wellseal	
Rubber Seal RH.377	1
Protector Ring RG.7797 or RG.3311	1
Protector Ring RH.135	1
Sealing Corks R.4720	2 (if required)
Ferobestos Washer GB.5150 or R.5285	1
Felt Seal D.54399	1

APPLICABLE TO ALL:-

Bentley Mark VI
Bentley 'R' Type
Rolls-Royce Silver Dawn
Rolls-Royce Silver Wraith

The time allowed for this modification is $4\frac{1}{2}$ hours.

SERVICE Bulletin No.

MODEL: BENTLEY MARK VI

FOR INFORMATION.

SERVICE REPLACEMENT BRAKE DRUMS.

A service replacement brake drum scheme has been inaugurated. There are now two sizes of drums available, namely, 'Standard' and 'Oversize'. These will be supplied to Retailers against worn drums returned for reconditioning.

The cost of the 'Oversize' replacement drum will be 66. 2/3% of the price of the 'Standard" drum.

Credit of the above mentioned percentage, less the cost of reconditioning, will be allowed on worn drums returned, providing they can be reground within the prescribed limits.

Drums which do not conform to these limits have no salvage value and consequently will be scrapped.

Part numbers.

Standard Replacement Brake Drum Part No.	Oversize Replacement Brake Drum Part Nos.
RG. 3212	x RH. 190
RG. 6018	RH. 191
RG. 6780	RH. 192

x RH. 190 will be supplied against all worn drums returned from post-war cars before:-

'R' TYPE BENTLEY Chassis No. B-1-GT

i. e. Before the steering geometry modification was introduced as a standardisation.

RH. 191 front brake drum and RH. 192 rear brake drum will be supplied to all cars produced after and inclusive of the above mentioned chassis number and prior to the introduction of the 'S' Series.

FOR INFORMATION:

FRONT SHOCK DAMPER SETTINGS.

Increased Bump Load.

Retailers are advised that a modified front shock damper setting is available for incorporation on cars which are reported as being subject to excessive 'front end lightness' or to the bump buffer hitting the front suspension bump stops when travelling at speed over rough roads.

The damping effect of each front damper unit is controlled by two spring loaded valves situated inside the damper casing; the bump valve, set at 65-70 lbs.(32 kilos) affects the damping on the upward movement of the front suspension, and the downward or rebound action is controlled by the rebound valve which is set at 125-130 lbs.(59 kilos).

This Bulletin describes the procedure for raising the loading of the bump valve by replacing the existing bump valve spring with a new spring of increased strength, raising the bump loadings to 95-105 lbs., the rebound loading remaining unaffected. The part number of the spring giving the 95-105 lbs. bump loading is RF.5022, these are obtainable from Hythe Road Service Depot.

It is important to note that the bump valve cap of the L.H. damper is at the FRONT of the damper casing, whereas on the R.H. damper, the bump valve cap is at the REAR. In each case, the rebound valve cap is on the opposite side of the casing.

Removal and replacement of the valve caps and springs, also the pumping action of the damper arm required to bleed the damper oil system of air, can be carried out easily and more efficiently if the damper unit is removed from the chassis frame as described in the procedure.

PROCEDURE: - 1 -

1. Jack up the front of the car - jack under, and in the centre of the front 'pan'. Place wood blocks under the outer ends of the lower triangle lever and lower the weight of the car on to the wood blocks.
The weight of the car must not be taken off the wood blocks until the job is completed, otherwise the road spring may become displaced.

2. Remove the front wheels. Remove the split pin, nut and the bolt from the Silentbloc bearing where the upper triangle levers form the joint at the top of the yoke. On removal of the bolt, the hub assembly will pivot on the lower joint of the yoke, and fall outwards unless it is prevented from doing so. A wood block of suitable height should be positioned on which the hub may rest, otherwise the weight will be taken by the flexible pipes of the hydraulic brake system.

3. Remove the three bolts and nuts securing the damper to the frame. On later cars, the outer fixing bolt is fitted the reverse way round, but provision is made in the bump stop bracket for a flat or ring spanner to be used for removal of the nut. Remove the damper and clean the casing, especially round the valve caps and the filler plug (6 in the attached sectional views of the front damper.)

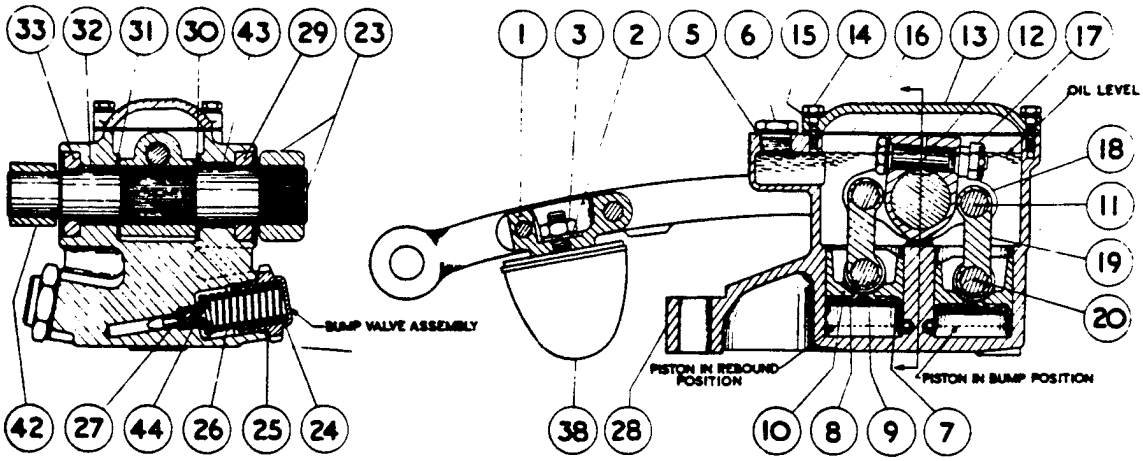

1 . Buffer Support.
2 . Spring Washer.
3 . Nut.
5 . Plain Washer(Alum).
6 . Filler Plug.
7 . Spring Ring-Replenishing Valve.
8 . Dished Plate-Replenishing Valve.
9 . Replenishing Valve Assembly.
10. Piston.
11. Pin-Rocker & Connecting Link.
12. Bolt(Spherical head)Rocker.
13. Top Cover-Damper Casing.
14. Setscrew-Top Cover.
15. Spring Washer-Top Cover.
16. Joint Washer-Top Cover.
17. Nut(Spherical Seat).
18. Rocker.
19. Connecting Link.
20. Pin-Piston & Connecting Link.
23. Triangle Lever(upper) & Main Shaft Assembly.
24. Valve Cap.
25. Plain Washer(Alum).
26. Spring-Bump Valve.
27. Valve with bleed hole.
28. Main Casing.
29. Gland Rubber-large-Main Shaft.
30. Bearing Washer-in-large-Main Shaft.
31. Bearing Washer-small-Main Shaft,
32. Bearing Bush-small-Main Shaft.
33. Gland Rubber-small-Main Shaft.
38. Buffer-upper triangle levers.
42. Triangle Lever(upper).
43. Bearing Bush-large-Main Shaft.
44. Valve Seating Bush.

4. Remove the bump valve cap (24), aluminium washer (25) bump valve spring (26), bump valve (27), also any packing washers which may be fitted between the spring and the cap.

   Clean the parts and replace in the damper using a new bump valve spring in place of the old one which was removed, also remove any packing washers, but do not tighten the valve cap.

   NOTE: For the above operation, it is recommended that the damper is bolted to a flat plate, approximately 7" x 7" x ⅜", to the back of which is attached a piece of angle iron. The plate may then be held firmly in a vice by means of the angle iron. The shock damper should not be held directly in a vice, as this is liable to cause distortion of the casing.

5. Remove the rebound valve cap, aluminium washer, also the packing washer(if fitted), spring and valve, (these are not shown in the illustration, but the arrangement is similar to that of the bump valve), clean the removed parts and replace in the damper, but do not tighten the valve cap.

   Whilst carrying out these operations, oil will have been lost from the damper oil system and replaced by air. This must be expelled by the following method:-

6. Remove the oil filler plug (6) and using an S.A E. viscosity 20 oil, top-up until the oil level reaches the bottom of the threads in the oil filler plug orifice. It is essential that the oil used for filling or topping up the dampers is perfectly clean.

   The following are a few of the S.A.E. 20 proprietary brands of oil used in the United Kingdom, but any good quality S.A.E. 20 oil is suitable for this purpose.

   Price's Motorine..... E

   Wakefield's Castrol..... Castrolite.

   Vacuum Mobiloil..... Arctic.

   Shell..... Single.

   Duckham's Adcoidised..... NPX.

   Essolube..... 20

   Silvertown Speedolene..... 20

7. If the upper triangle lever is moved up and down, a certain amount of free movement exists before any resistance is encountered. Both valve caps should be unscrewed until the triangle lever can be moved up and down without any damping effect being felt, then the pumping action of the triangle lever will bleed the system of air, if, at the same time the oil system is kept topped-up. The valve caps should be screwed in and the triangle lever operated to ascertain whether all free movement has been eliminated, if it has not, then the valve caps will have to be slackened off and the pumping and topping-up operation repeated until the free movement is eliminated.

FOR INFORMATION:

FRONT SHOCK DAMPER SETTINGS.

INCREASED BUMP LOAD.

In the absence of a shock damper test-rig, it is possible that the desired increase in front damper poundage may not be achieved by fitting the valve spring RF.5022 specified in Bulletin BB-27.

It has been found that additional packing washers may be required, and this cannot be determined except by testing the damper.

A new spring RF.5021, has therefore been specified to give a 100-120 lbs. bump load without further adjustment, and all packing washers which may be found with the original spring should be discarded.

It should be noted that this spring will not be introduced on production, but will be a service replacement only, to be used for modifying shock dampers where a test-rig is not available.

FOR INFORMATION:

CANCELS ISSUES DATED 7.4.48 and 27.5.49.

FRONT SUSPENSION SPRINGS

TO REMOVE AND REPLACE OR FIT A NEW FRONT SUSPENSION SPRING

This Bulletin cancels the previous Bulletins Nos.BB-39 and BB-39a (Section K) and is issued for guidance in removing, replacing or renewing a front spring on early and later models. The procedure of removal having been amended in view of later experience.

NOTE: See para.3 concerning a modification to the suspension spring compressing tool No. 3752/T1008.

CAUTION: Owing to the very high poundage of a front spring when fully compressed, due care must be taken when decompressing and compressing it.

1 TO REMOVE:

(i) Jack up the front of the car - jack under, and in the centre of the front 'pan' and remove the front wheel.

(ii) Remove the castle nut securing the ball end pin to the side steering lever. Collect the pressure spring and sealing disc and disconnect the outer end of the cross steering tube from the cross steering lever as follows:-

a) Place a substantial steady block in contact with the lever near the ball end pin to be removed, in order to provide a solid reaction point and then with the aid of a large steel drift and hammer, give the eye of the lever (adjacent to the ball pin) one or more sharp blows which will release the tapered shank of the ball pin from its location in the lever.

b) Before refitting a ball joint (ball pin) to a lever, clean the tapered shank of the pin and corresponding hole. Do NOT use a hammer when refitting a ball pin to a lever, but rely on tightening the nut to draw the mating parts together.

NOTE: The reason why it is necessary to disconnect the outer end of a cross steering tube when removing and replacing a front suspension spring, is that when the yoke is disconnected from the upper triangle lever, it allows the lower triangle lever to move beyond its fullrebound position, causing the neck of the ball end pin to foul the socket at the INNER end of the cross steering tube at point 'A' Fig.1. This damages the socket by raising a burr.

(iii) Remove the two ½" (B.S.F) nuts and the flat spring washers securing the bracket of the front stabiliser (anti-roll rod) to the lower triangle lever, and pull the bracket clear of the two studs.

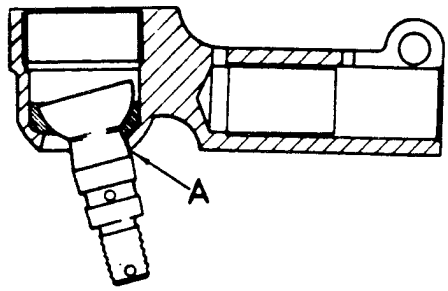

FIG. 1. BALL END PIN & SOCKET - INNER END OF CROSS-STEERING TUBE.

(iv) Place the spring retaining bolt, Tool No.3752/T1002 downwards through the hole ('A' Fig.2) provided in the top of the front 'pan' and leave it in this position.

NOTE - IMPORTANT: To ensure full safety of the operator, the threads of the spring retaining bolt and its nut must be examined after each time the tool has been in use. If the threads are not found to be in good condition, then a new retaining bolt and nut should be obtained.

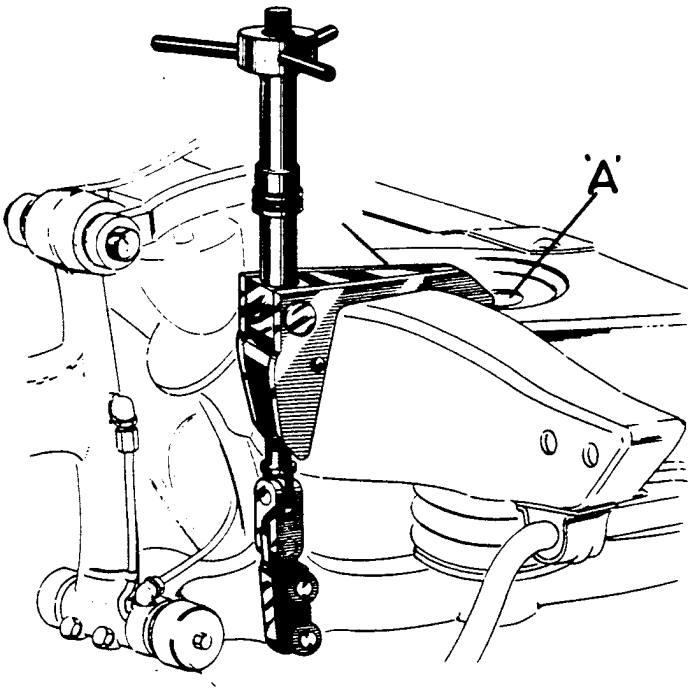

FIG. 2. SPRING COMPRESSING TOOL IN POSITION.

(v) Place the lower end of the spring compressing Tool No. 3752/T1008 on to the two studs of the front stabiliser bracket and then place the claws of the tool so that they fit snugly under the lip (edge) of the hole in the top of the front 'pan' as shown in Fig. 2. Tighten up the two knurled nuts of the tool to secure.

(vi) Fully compress the spring and then FULLY tighten up the nut of the spring retaining bolt to secure. While compressing the spring, guide the threaded end of the retaining bolt through the hole provided in the lower buffer stop.(6 Fig.3 or 4 Fig.4). Leave the spring in position until the following operation (vii) has been carried out.

(vii) While the hub is being held, remove the bolt from the Silentbloc bearing at the upper end of the yoke and allow the hub to swing over and rest on a block of wood.

(viii) Release the spring compressing tool, which will allow the lower triangle lever to move in a downwards direction until the rubber buffer attached to the upper triangle lever rests on its stop. Remove the spring complete with its retaining bolt and temporarily reconnect the yoke to the upper triangle lever by means of a suitable tommy bar.

NOTE: It is not necessary to disconnect the flexible pipe either from its bracket on the frame or from the expander of a front brake during the above mentioned operations, but precaution must be taken when removing or replacing a front spring, not to allow any strain to be imposed on the flexible pipe.

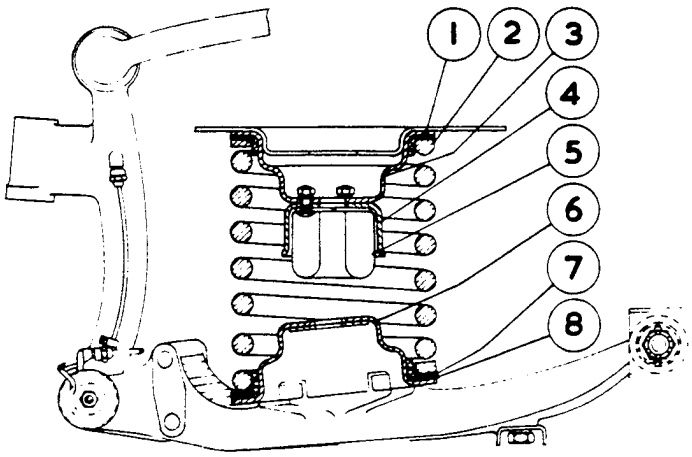

1. Spring seating (rubberised fabric).
2. Road spring.
3. Buffer carrier.
4. Buffer housing.
5. Buffer.
6. Buffer stop.
7. Spring seating (rubberised fabric).
8. Adjusting washer/s (if required).

FIG. 3. FRONT SUSPENSION SPRING IN POSITION - EARLY MODEL CARS.

2. TO CHANGE A FRONT SUSPENSION SPRING:

(i) To fit a new spring, a "pot" STD-416 (Tackle, compressing and decompressing front road spring) will be required.

(ii) Place the spring removed into the "pot" and clamp it down by FULLY tightening down the two outer nuts of the "pot".

(iii) Remove the retaining bolt from the spring.

(iv) With one of the two special washers correctly positioned on the long centre bolt of the "pot", pass the bolt through the bottom of it, place the other washer in position on the cover of the "pot" and then fully tighten down the nut of the centre bolt.

(v) Remove the two outer nuts of the "pot" and carefully unscrew the nut of the centre bolt which will allow the spring to extend to its full free length.

(Cont'd).

NOTE: There may be one or more adjusting washers (8 Fig.3) at each end of a spring. These are inserted to attain the required standing height, and the quantity varies in relation to the poundage of available springs. It does not follow therefore, that the same quantity will be required if a spring is changed. It is usual when supplying a new spring to include with it the requisite number of adjusting washers.

If a given spring has for example five adjusting washers, then three should be placed at the lower end of the spring and the remaining two at the upper end in order to maintain adequate register on the buffer stops.

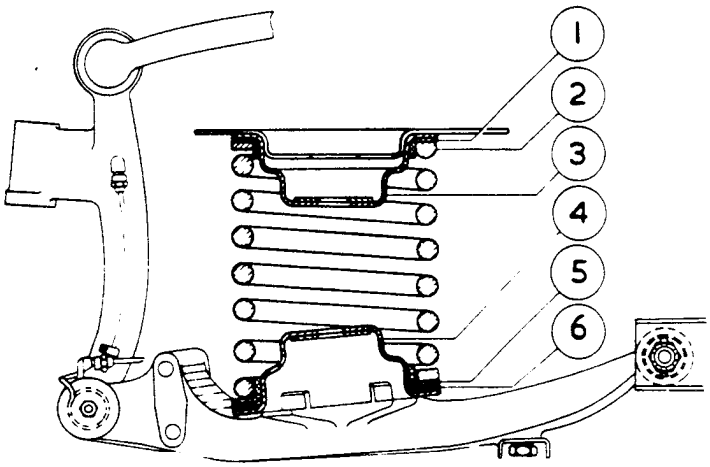

1. Spring seating (rubberised fabric)
2. Road spring.
3. Buffer stop(upper).
4. Buffer stop(lower).
5. Spring seating (rubberised fabric).
6. Adjusting washer/s (if required).

FIG. 4. FRONT SUSPENSION SPRING IN POSITION - LATER MODEL CARS.

(vi) With the fabric spring seatings(1 & 7 Fig.3), the buffer carrier 3, (complete with buffer and housing) and the buffer stop 6, and adjusting washers (if any) in position on the new spring as shown in Fig.3, fully compress the spring by means of the "pot" and then FULLY tighten down the two outer nuts to secure.

NOTE: On later cars, commencing at Chassis Nos.B-466-EY & B-126-LEY on which "Progressive Bump Stops" have been incorporated, the buffer housing, 4 Fig.3 and the rubber buffer (5) have been eliminated (See Fig.4).

(vii) Remove the centre bolt from the "pot", and in its place, fit the retaining bolt (3752/T1002) and FULLY tighten down the nut.

(viii) Fit the spring to the car. As soon as the spring has been placed in position and fully compressed by the compressing tool, the yoke should be reconnected to the upper triangle lever by refitting the bolt. This should be done before removing the spring retaining bolt 3752/T1002. The castellated nut of the yoke bolt must only be fully tightened up and split pinned when the car has been lowered

(Cont'd)

to the ground and bounced a few times and allowed to settle in its normally loaded state.

(ix) Should it be found that when the spring is in position, that a coil of it is too near or touches the frame, this can be rectified by compressing the spring again and rotating it to a different position.

3. TO MODIFY AN EARLY TYPE FRONT SPRING COMPRESSING TOOL NO.3752/T1008:

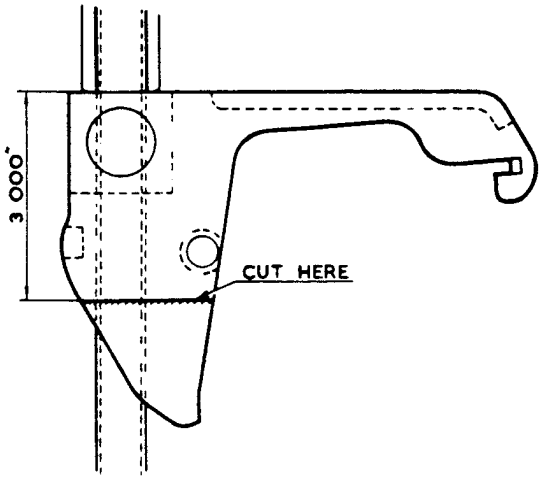

FIG. 5. MODIFICATION TO SPRING COMPRESSING TOOL.

In order to make the early type front spring compressing tool suitable for all types of chassis, the side plates of the clamp should be shortened to the dimension shown in Fig.5. A modified tool in this respect is shown in position in Fig.6. The later type production of this tool has shortened side plates.

On certain chassis it may be necessary to screw two adaptors (extension pieces) on to the two ½" (B.S.F.) studs at the front of the torque arm in order that a straight pull can be obtained with the tool when compressing a spring. These adaptors are shown in position in Fig.6. They are not supplied but can be made in accordance with details given in Fig.7.

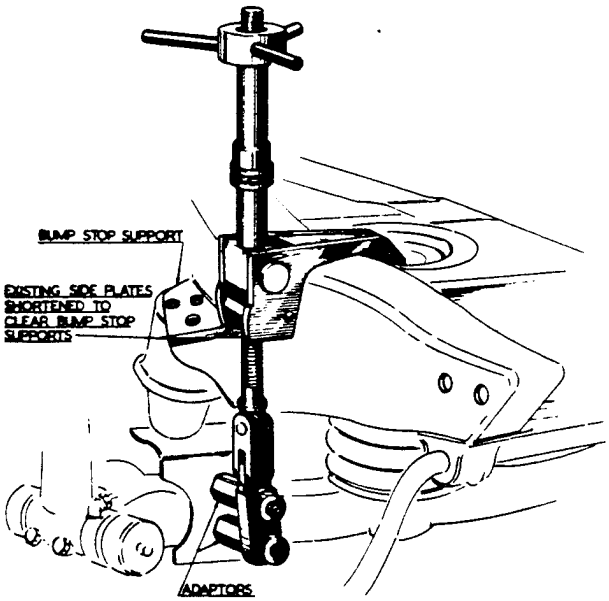

FIG. 6. MODIFIED SPRING COMPRESSING TOOL IN POSITION.

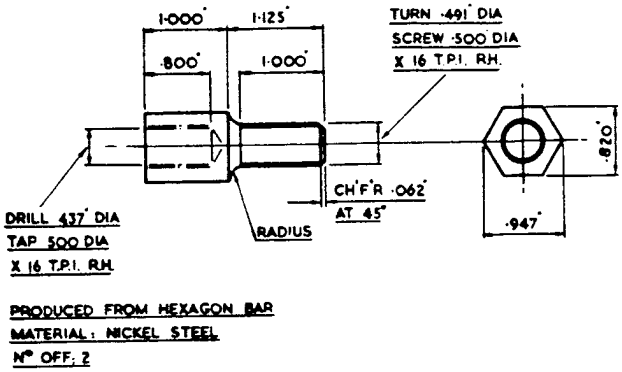

FIG. 7. ADAPTORS - STUDS - TORQUE ARM.

FRONT SUSPENSION & STEERING GEOMETRY

Questions frequently arise in service concerning the geometry of the front suspension, especially its effect on the steering and ride. The notes in this Bulletin will serve to draw attention to certain variables which may exist, and to indicate the method of treatment.

The variables which can exist in the geometry and which may be the subject of enquiry as to the effect on the steering and ride are as follows:-

SPECIFICATION

1. STANDING HEIGHT (Height of Front Suspension)

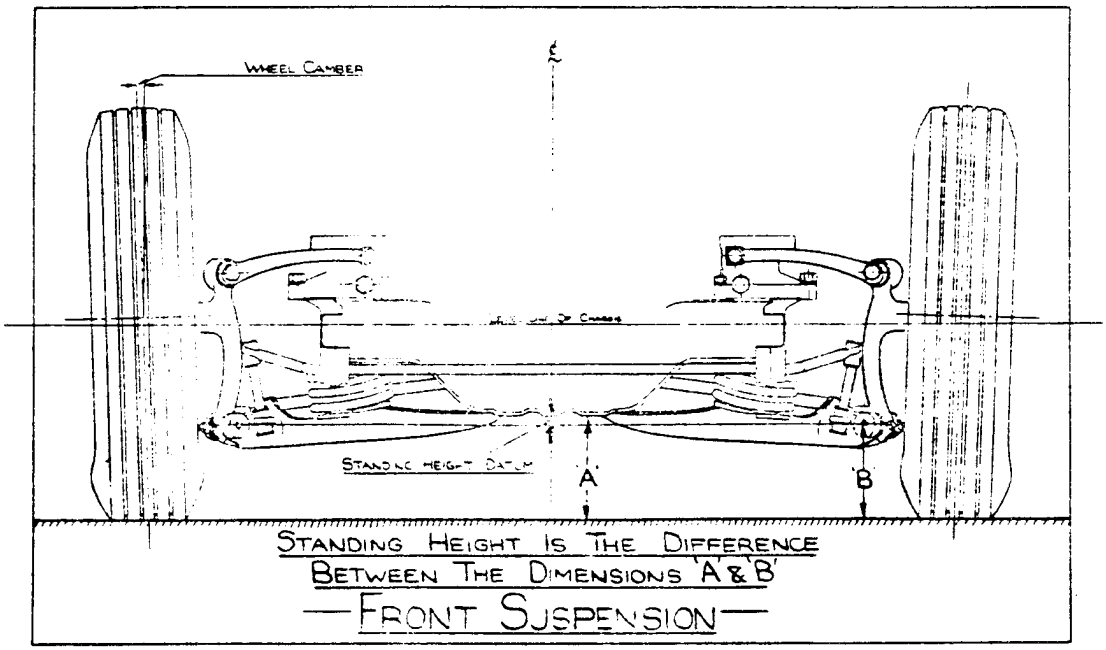

FIG.1.

The limits for standing height are:-

Standard Suspension Springs	.700" to 1.350" (18 mm. to 34 mm.) car unladen
Colonial " "	1.350" to 2.050" (34 mm. to 52 mm.) car unladen.

2. TOE-IN:

No variation is permissible, and this must always be set within the limits of 1/16" to $\frac{1}{8}$" (1.6 mm. to 3.2 mm.) toe-in.

3. CASTOR ANGLE:

The limits for castor angle are:-

$3/4^{\circ}$	positive
	to
$1\frac{1}{2}^{\circ}$	negative

Adjustment up to a maximum change of $1\frac{1}{2}^{\circ}$ is permissible as described later.

4. WHEEL CAMBER:

The limits for wheel camber angle are:-

$\frac{1}{2}^{\circ}$	outward
	to
$\frac{1}{2}^{\circ}$	inward

No adjustment is provided.

5. SHOCK DAMPERS:

The present standard loading for the front shock dampers is:-

Up	95 - 105 lbs.	(43 - $47\frac{1}{2}$ Kgs.)
Down	125 - 135 lbs.	($56\frac{1}{2}$ - $61\frac{1}{2}$ Kgs.)

Adjustment is possible, but it cannot be checked without a special rig, owing to leakage past the valves which is deliberately introduced.

EFFECT OF THESE VARIABLES ON STEERING OR RIDE.

A. STEERING JOGGLES:

Generally speaking, it can be said that the following settings will reduce steering joggles.

(i) High shock damper poundage with possibly reduced slow leak in hot Countries.

(ii) Standing height as near low limit as possible.

(iii) Negative castor angle.

(iv) Check balance of wheels and state of wear of tyres.

B. COMPLAINTS CONCERNING THE RIDE:

The best ride for average road conditions is obtained by:-

(i) Standard shock damper loading.

(ii) Standing height towards the bottom limits specified above.

C. SUSPENSION CRASHES THROUGH:

The best results for average road conditions are obtained by:-

(i) High shock damper loading.

(ii) Standing height adjusted to top limits.

Where this complaint exists Overseas on bad roads:-

(i) High shock damper loading with reduced slow leak.

(ii) Fit Colonial suspension springs which also increase the standing height.

Other complaints may exist such as steering pulling to one side which can be corrected by judicious adjustment of the castor angles.

METHOD OF ADJUSTMENT.

1. STANDING HEIGHT:

No precise instructions can be laid down, and each car must be individually considered in relation to the weight on the front wheels and the poundage of the springs at present fitted. Although certain packing washers may be fitted, it is not advised that extra packing washers should be added except on advice from the Main Service Station, owing to the fact that the coils of the spring may become choc-o-bloc before the bump buffer is fully compressed. It is however, permissible to remove any packing washers in order to lower the car if desired. The standing height will be reduced by twice the thickness of any washers removed.

In the event of any change in the standing height being required other than what can be achieved by the removal of packing washers, consult the Main Service Station, quoting if possible, the weight on the front wheels (car unladen).

Special high rating springs (7" deflection) are available for abnormal road conditions especially Overseas - these springs are called Colonial springs. They have the advantage of being able to absorb a greater amount of energy or road shocks, and therefore reduce crashing through. The ride, is, however, harder than with the standard suspension springs, although this may be more acceptable to certain Owners. If it is considered that Colonial springs would satisfy the Owner, full details of the complaint with particulars of weight on the front wheels should be forwarded to the Main Service Station.

TO MEASURE THE STANDING HEIGHT:

As shown on Fig.1, the standing height is the difference between the

dimensions 'A' and 'B'. The measurements should be taken with the car unladen i.e. less driver and passengers and with five gallons of petrol in the tank. To measure, proceed as follows:-

(i) Check the front and rear tyre pressures and correct if necessary.

(ii) Place the car on level ground.

(iii) Measure the distance from the ground to the underside(centre rib) of the centre plate of the front pan (Dimension 'A').

(iv) Measure the distance from the ground to the centre of the lower bearing of the yoke, i.e. the centre of the bolt which passes through the bearing(Dimension 'B'). Subtract 'B' from 'A' and record the reading obtained. Unless the standing height is far too low, Dimension 'A' is always greater than 'B'.

2. TOE-IN:

The tendency is for the front wheels to toe-out owing to settling down of the rubber in the suspension. Toe-out can usually be recognised by excessive wear on the inside of the right-hand front tyre, or, on the inside of the left-hand front tyre in Countries in which cars are driven on the right-hand side of the road. Excessive toe-in causes wear on the outside of the front left-hand tyre, or, on the outside of the right-hand tyre in Countries in which cars are driven on the right-hand side of the road.

It is important that the toe-in should be very carefully measured and accurately adjusted. Refer to the Workshop Manual, Section Q, Su -Section BQ.2. Owing to inevitable "run-out" of the road wheels, it is recommended that the mean of two readings should be taken at opposite points on the wheel. The car should be rolled forwards half a revolution to take these two readings.

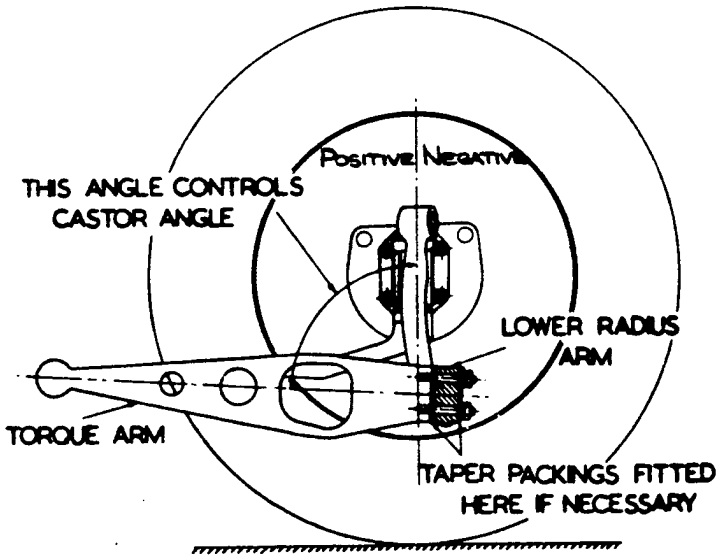

FIG. 2.

3. CASTOR ANGLE:

The castor angle is determined by the angle between the yoke and the torque arm as shown in Fig.2. It may be measured by a direct reading by means of a protractor and spirit level on the top face of the stub axle after removing the cover plate. This face is at right angles to the centre line of the king (pivot) pins.

The only way of altering the castor angle is to fit taper packings between the lower radius arm and the torque arm. Obviously in order to maintain parallelism of the abutment faces, an equal and opposite taper packing must be fitted on the outside of the radius arm i.e. between the radius arm and the bracket of the front stabiliser. Parallel packings may already be found between the torque arm and the radius arm. These are not for the purpose of adjusting the castor angle, they are fitted to line up the yoke in the upper triangle levers to avoid strain on the upper Silentbloc.

When taper packings are fitted, equal care must be taken to line up the upper end of the yoke in the triangle levers by the use of parallel packings if necessary. It must be remembered that when altering the castor angle, the upper end of the yoke should stay in the same position - the lower end being swung about this point.

If adjustment of the castor angle in a negative direction is required, the torque arm will probably need shortening in order to line up the upper end of the yoke in the triangle levers. If it is found that a parallel packing is fitted between the torque arm and the lower radius arm, then it should be removed, which will automatically reduce the effective length of the torque arm. The required reduction in length is 0.200"(5.08 m/m) for each degree of alteration in the castor angle. This of course includes any packings which may be removed. The maximum amount which may be removed from the torque arm itself is 0.125"(3.17 m/m).

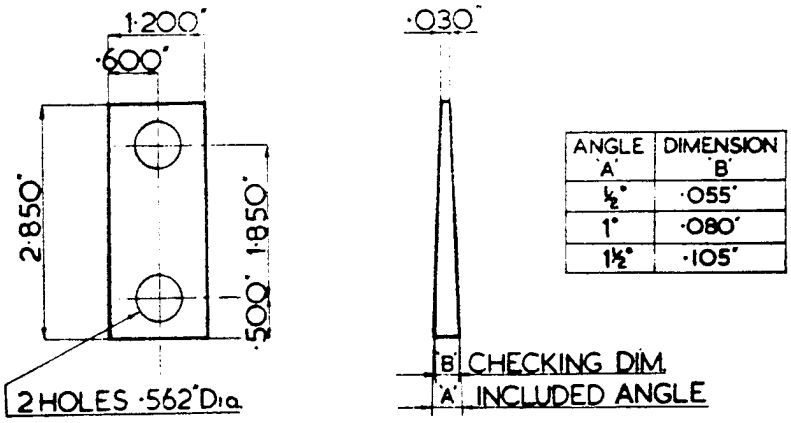

ANGLE 'A'	DIMENSION 'B'
½°	·055"
1°	·080"
1½°	·105"

MATL: LOW CARBON STEEL

FIG. 3.

Where castor angle is changed in a positive direction, it is possible that longer studs KB.963/Z-Torque arm, will be required. A drawing of the taper packings required is given herewith(Fig.3) in order that they may be made up as required. The maximum change recommended is $1\frac{1}{2}^{\circ}$.

4. WHEEL CAMBER:

No adjustment is provided, nor is it to be expected that any benefit would be achieved by any alteration. No dis-advantage has been found in a slight negative camber angle.

5. SHOCK DAMPERS:

Adjustment of the poundage is fully described in Service Bulletins Nos: BB-27 and BB-31 (Section K). Where still further damping is required, as in hot Countries, it is permissible in addition to plug up one of the two oil leak holes provided in each valve by removing the bump or rebound valve from the front dampers and soldering up the leak hole in the head of the valve, which communicates with the leak hole in the stem of the valve near the head. These two holes should not be confused with the three larger diameter equally spaced holes drilled in the stem of the valve near the centre.

TOE-IN OF FRONT WHEELS.

FOR INFORMATION:

The attention of Retailers is directed to a change in the alignment settings for the front wheels of the Bentley Mark VI.

These are now 1/8" to 1/4" (3.2 mm to 6.5 mm) for the initial settings when a replacement has been made of all the Silentbloc bushes in the suspension system, and 1/16" to 1/8" (1.6 mm to 3.2 mm) when the front suspension has settled down.

This information has been included in the Workshop Manual, Section Q, Sub-section BQ-2, and Bulletin No: BB-74, and the relevant ammended pages are included herewith.

FOR INFORMATION.

FRONT SUSPENSION & STEERING GEOMETRY

CASTOR ANGLE.

Commencing at Continental Chassis No.BC-38-LC and subsequent chassis, the castor angle has been increased from 1° to $1\frac{1}{2}^{\circ}$ POSITIVE by incorporating wider angled taper packings, Part No.RF-8070 in place of RF-8069 taper packings. These packings (4 off) are used in pairs on either side of the lower radius arms as shown in Fig. 2, of Bulletin No.BR-74 (Section K).

FRONT SUSPENSION AND STEERING GEOMETRY.

(RIGHT-HAND AND LEFT-HAND DRIVE)

FOR INFORMATION:

1. DESCRIPTION:

Commencing at Chassis No.B.1-GT, the front suspension and steering geometry has been modified in various ways with the object of providing greater steering accuracy by eliminating certain geometrical errors which were present in the original design. The new design affects practically the whole of the front suspension and hubs, although in most respects the changes to individual parts are small and relate more to dimensions than to design. It is not possible to apply the revised design to existing cars.

The changes in the revised design are briefly as follows:-

(i) The nominal frame height is raised .400" (10 m/m)

(ii) The lower yoke bearings at the outer ends of the lower triangle levers have been raised 1.500" 38 m/m), thus reducing the angularity of the lower triangle levers by 1.100" (27.9 m/m) and increasing the ground clearance.

(iii) The angularity of the upper triangle levers has been similarly reduced.

(iv) The effective radius of the track rods and their angularity has been increased by interposing a third section between the two swinging track rods. This involves the use of an extra steering lever on the front pan.

(v) Consequent upon the above changes, the free and loaded length of the front suspension springs is reduced by .600" 15 m/m), but the number of coils and the rating remain unaltered.

(vi) The off-set of the point of contact of the tyres from the projected centre line of the pivots is reduced, the object being to reduce any disturbance of the steering if one brake is more effective than the other.

(vii) Timken taper roller bearings are used in the front hubs instead of ball bearings, It is important to note the method of adjustment as described in Bulletin BB-95 (Section T).

(viii) The method of balancing the wheels and tyres has been changed from a fixed position variable weight to a variable position fixed weight.

(ix) The front brakes are re-designed and now embody internal hydraulic expander cylinders in place of the former Girling wedge system.

PRINTED IN ENGLAND

The equal wear lirkage is re-designed and the brake shoes have been made more flexible to prevent brake "rumble" at high temperatures. (For setting instructions and external adjustment see Bulletin No. BB-96 in Section J.)

(x) The steering drop arm has been shortened to lighten the steering.

NOTE The upper triangle lever assembly of the front shock dampers is not interchangeable with the assembly fitted to chassis prior to Chassis No. B.1-GT, owing to the different angular setting of the lever in relation to the main shaft of the lever.

2. STANDING HEIGHT:

In consequence of the changes in the geometry of the radius arms mentioned above, the datum for measuring the standing height has been shifted relative to the ground as compared with the original design, and although the frame is .400" (10 m/m) higher than formerly, the reduced angularity of the lower radius arms means that the measurement of standing height can now become a negative figure.

The limits for standing height are:- (car unladen).

(a) Standard Springs

.400" (10 m/m) negative
to
.200" (5m/m) positive

(b) Colonial Springs

.600" (15 m/m) positive
to
1.200" (30 m/m) positive

A negative reading is when dimension 'B' Fig.1 is greater than dimension 'A'
A positive reading is when dimension 'A' is greater than dimension 'B'.

3. TO MEASURE THE STANDING HEIGHT:

The measurements should be taken with the car unladen. i.e. less driver and passengers. To measure, proceed as follows:-

(i) Check the front and rear tyre pressures and correct if necessary.

(ii) Place the car on level ground - this is important.

(iii) Measure the distance from the ground to the underside (centre rib) of the centre plate of the front pan (Dimension 'A').

(iv) Measure the distance from the ground to the centre of the lower bearing of the yoke, i.e. the centre of the bolt which passes through the bearing (Dimension 'B').

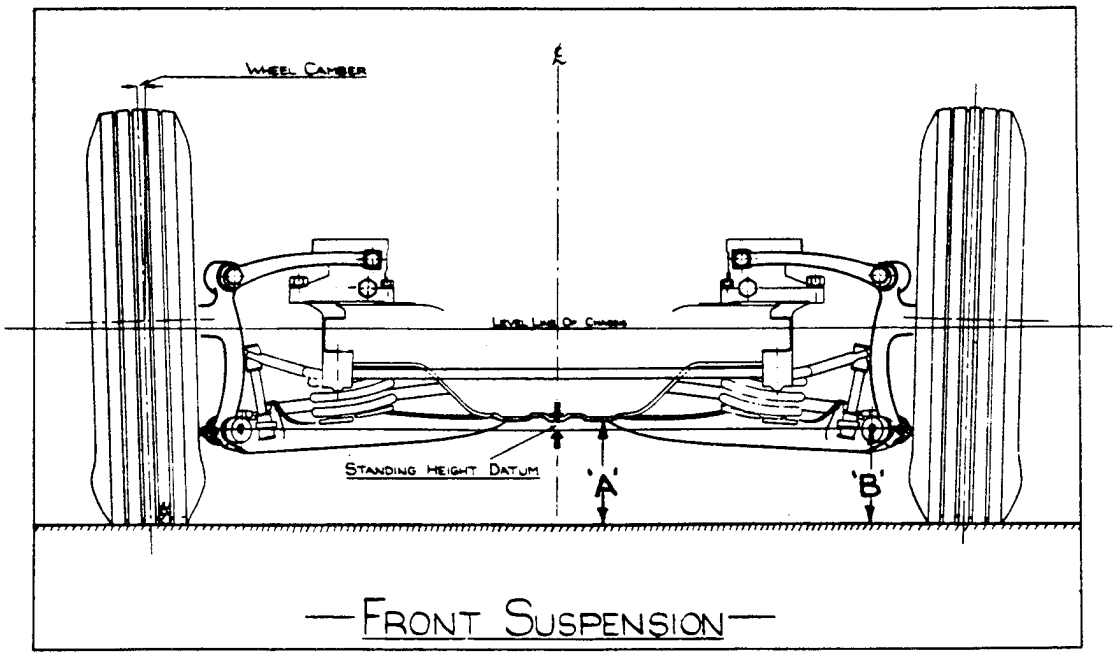

FIG. 1.

(v) Subtract 'B' from 'A' and record the negative or positive reading obtained.
NOTE:- For method of adjustment of standing height, See Bulletin No. BB-74 in Section K.

4. TOE-IN OF FRONT WHEELS:

The Factory setting of toe-in on new cars is 5/32" ± 1/32" (3.9 $^{+.7}_{-1.5}$ m/m). This allows for the settling down of the various Silentbloc rubber bushes of the front suspension and this setting should be used if the Silentbloc bushes are renewed. Under normal running conditions, the toe-in must be set to within the limits of 1/16" to 1/8" (1.6 to 3.2 m/m).

5. CASTOR ANGLE:

The limits for castor angle are, 1/2° positive to 1½° negative.

6. FRONT WHEEL CAMBER ANGLE:

The limits for wheel camber angle are, 0 (Vertical) to 1° outward (with four passengers in the car). No adjustment is provided.

PRINTED IN ENGLAND

7. PIVOT PIN INCLINATION (ANGLE).

Approximately $4\frac{1}{4}^{\circ}$. No adjustment is provided.

8. SHOCK DAMPERS:

The standard loading for the front shock dampers is unchanged, i.e.

Up	(Bump Load)	95 - 105 lbs.	(43 - $47\frac{1}{2}$ Kgs.)
Down	(Rebound Load)	125-135 "	($56\frac{1}{2}$-$61\frac{1}{4}$ Kgs .)

FOR INFORMATION:

UPPER ROLLER BEARING ASSEMBLY-PIVOT PIN-FRONT SUSPENSION.

Whenever the stub axles have to be removed from a car for re-conditioning purposes as described in Sub-Section BK-2, of the Workshop Manual, opportunity must be taken during the re-assembling operations to check the inner roller race fitted to the upper end of the pivot pin for correct height in relation to its outer race. A condition can arise whereby the lower end of the rollers (A Fig.1) protrude below the lower edge of the outer race, i.e. at point 'B' due to an accumulation of adverse limits of machined parts. Fig. 2, shows the correct position of the rollers, i.e. the lower end face of the rollers are well above the lower edge of the outer race.

It should be noted that the information contained in this Bulletin and Sub-Section BK-2, applies to chassis numbers bearing the suffix letters AK, AJ, BH, BG, CF, CD DA, DZ, EY, EW, FV and FU.

Commencing at Chassis No:B-1-GT and onwards, this bearing assembly is altered to the needle type and this checking is unnecessary.

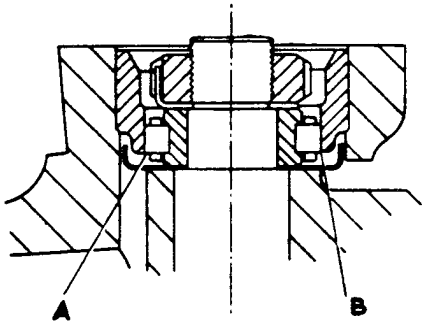

FIG. I.

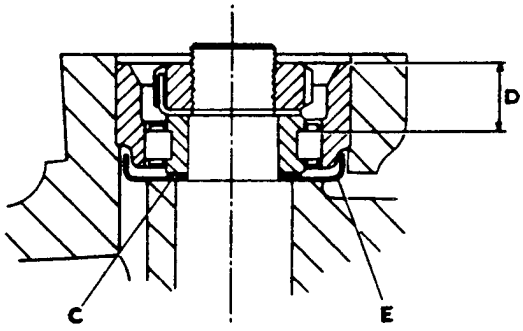

FIG. 2.

TO CHECK, PROCEED AS FOLLOWS:-

(i) Having thoroughly cleaned all dismantled parts, including the bore in the yoke and the recess at its lower end against which the packing ring makes contact, and fitted new parts as found necessary(described in paragraphs 3, 4 and 5 of Sub-Section BK-2), refit the stub axle to its yoke in accordance with Sub-Paragraphs (i), (ii), (iii) and (iv) of paragraph 6.

(ii) The next operation is to carry out the check previously mentioned. Having fully tightened up the nut at the top of the pivot pin, now remove the nut and the lockwasher beneath it, leaving the pivot pin in position.
NOTE: It is essential to make sure before making the undermentioned measurement that the upper outer race is fully home in its downward direction in the stub axle.

(iii) Place a small straight-edge across the top face of the outer race of the upper roller bearing assembly of the pivot pin (not across the top face of the stub axle). With the rule of a small depth gauge, measure the distance downwards from the top face of the outer race to the top face of one of the rollers (not the brass roller cage), i.e. dimens on 'D' Fig. 2 and note.

a) If dimension 'D' is within the limits of .430" - .480" (10.9 - 2.2 m/m), this is correct.

b) If dimension 'D' is between the limits of .480" - 515" (12.2-13 m/m), then it will be necessary to remove the pivot pin and fit a .040"(1 m/m) thick packing washer ('C' Fig.2), Part No.R-4468, between the oil trough ('E') and the inner roller race.

c) If dimension 'D' is over .515" (13 m/m), fit two packing washers.

(iv) Having refitted the pivot pin and fully tightened the nut, check that the stub axle can be moved freely from one full lock to another, apart from the normal drag caused by the felt washer at the lower end of the yoke.

(v) Continue the re-assembling operations as described in Paragraph 6, of Sub-Section BK-2, commencing at Sub-Paragraph (v) and onwards.

Packing washers R-4468, will be supplied upon application to the London Service Station.

FOR INFORMATION:

STEERING CHARACTERISTICS.

Some complaints have been received on relatively new cars of steering wander on a straight road, or of oversteer on corners. This Bulletin indicates the appropriate method of treatment.

1. WANDERING:

The tendency to wander on a straight road is due to too little castor effect combined with excessive friction in the steering joints or steering box. This complaint can be remedied by attention to the following:-

a) The present castor angle may be negative (forwards) to the extent of possibly 3/4°. It can be made positive (backwards) by fitting taper wedges between the torque arms and the lower radius arms. Refer to Service Bulletin BB-74. 1° taper wedges will probably be adequate in most cases. 1½° wedges can be fitted if desired, but they tend to increase road shocks.

b) The packings between the side steering levers and the swivel axle should be removed. The unwanted length of bolt can be made up by suitable packing washers under the nuts.

c) The friction in the steering ball joints should be reduced where possible. The best condition for minimum friction is obtained by relieving the bedding on the spherical seat towards the largest diameter, i.e. maximum bedding near the bottom. Modifications are being made to the ball joints on future cars as follows:-

(i) The centre steering lever ball joints will have an anti-friction device interposed between the spring and the ball end.

(ii) The joint at the front end of the side steering tube will have practically all friction eliminated by the substitution of sixteen ¼" dia. balls for the existing seating.

(iii) The springs at the rear end of the side steering tube will have twice the rate but will be arranged to have zero load on the ball pin in the straight ahead position, instead of 196-lbs. as at present.

It is not intended that these modifications will be applied retrospectively except when complaints cannot be dealt with by the other treatment described.

d) The pre-load on the steering cam bearings may be excessive. It has now been reduced on new cars. The total steering box friction (side steering tube disconnected) should preferably not exceed 1½lbs. measured at the rim of the steering wheel.

e) The state of wear of the front tyres affects castor and directional stability. New tyres represent the worst condition, but it is preferable always to fit the most worn tyres to the rear wheels in the interests of controllability.

2. OVERSTEER:

The new geometry steering cannot be made to have the marked understeer characteristics of the old steering geometry, but a few things can be done to improve matters:-

a) The pressure difference between the front and rear tyres should be at least 7-lbs., preferably 9-lbs., cold. Recommended pressures for the Bentley Steel Saloon are 23-lbs. front and 32-lbs. rear.

b) Always fit the least worn tyres on the front wheels.

c) Understeer can be improved slightly at the expense of joggles, by raising the front of the car to the top limits of standing height.

d) On certain coachbuilt cars with a lot of overhang, an improvement can be effected by fitting flanged Silentbloc bushes to the inner ends of the lower triangle levers. Apply to Hythe Road for details in this case.

-----oOo-----

FOR INFORMATION:

CROSS STEERING LEVER BOLTS

With the introduction of the revised steering geometry from chassis number B.1.GT onwards, a packing piece was fitted between the cross steering lever and the flange on the stub axle assembly to which the cross steering lever is bolted. It has been found that this packing piece is not essential and it has been deleted on production from chassis number B.89.PU onwards. In consequence shorter bolts, part number FB.4991, are fitted in place of the bolts BF.8198, and are the only bolts now available as replacements.

Should it at any time be necessary to replace the cross steering lever bolts, the shorter bolts, FB.4991, should be fitted and the packing piece discarded.

CATEGORY 3a

MODIFICATION
FRONT SHOCK DAMPERS KNOCKS.

Cases have occurred of an intermittent knocking from the front suspension system which has been traced to the replenishing valves in the front shock dampers. The knock is recognisable as a distinctive metallic clicking or tapping which is transmitted up the steering column. It is normally intermittent and is, of course, more noticeable on rough road surfaces.

1. Piston.
2. Replenishing Valve Assy.
3. Dished Plate.
4. Spring Retaining Ring.

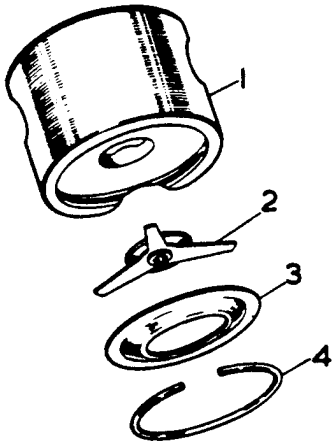

SHOCK DAMPER PISTON AND REPLENISHING VALVE.

A new replenishing valve assembly has been designed with a stronger stop plate spring and is immediately effective in eliminating the knock. The valve is now fitted on current production and is available as a service replacement. The illustration shows the new valve assembly which may be distinquished from the earlier type by the plain washer under the rivet head.

Retailers should fit the new replenishing valves only after a road test has confirmed the diagnosis. Full details for dismantling and re-assembling the front shock dampers are given in Section K of the Workshop Manual.

Parts Required.

RF.10311 SA Replenishing Valve Assembly 4 Off.

MODIFICATION.

For Category 1 Action:

a) Rear Axle Retaining Bolts.
b) Rear Brakes - Equal wear Linkage.

It has been decided to fit 3/8" diameter bolts as shown on Fig.1, in place of the existing 5/16" diameter bolts (5) which retain the rear axle shaft bearing housing (2) and the brake carrier plate (1) to the axle tube. It has also been decided that opportunity should be taken to reverse the equal wear brake linkage of the rear brakes and fit the stiffened linkage which consists of a new push rod and jaw.

Although some cars will already have the unstiffened linkage reversed and others will have the stiffened linkage, it is desired that all cars should be brought to the full modified standard as soon as possible. The decision to reverse the brake linkage and fit the stiffened type is in order to eliminate the possibility of the rear brakes developing a jambing action (spragging), due to the trailing shoes pivoting about the inter shoes equal wear linkage instead of about the adjuster end of the shoe. A modification has been introduced, moving the point of attachment of the linkage to the trailing shoe nearer the adjuster. This is done by simply reversing the linkage and the central pivot of the linkage, so that the shorter of the two links is now attached to the leading shoe instead of to the trailing shoe as was previously the case.(See Fig.2).

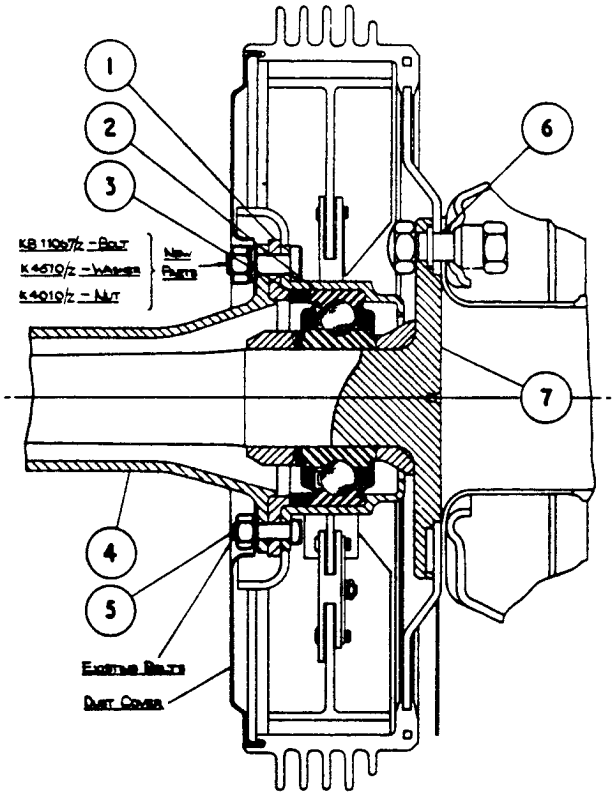

1. Brake carrier plate(spigot plate).
2. Bearing housing.
3. Distance piece.
4. Axle tube.
5. Bolt (5 off).
6. Wheel stud.
7. Axle shaft.

FIG. 1.

MATERIAL REQUIRED:

Part No.	Description	No. Off
RG.6045	Jaw - Push Rod	2
RG.6046	Push Rod	2
KB.11067/Z	Bolt - Axle shaft to tube	10
K.4510/Z	Grover Washer	10
K.4010/Z	Nut	12 (Two of these nuts will be required for the jaw of each of the two new push rods).
	$\frac{3}{8}$" dia. three flute twist drill	1 off

1. TO FIT $\frac{3}{8}$" DIAMETER BOLTS TO THE REAR AXLE SHAFT BEARING HOUSING, THE BRAKE CARRIER PLATE AND THE AXLE TUBE.

(i) Chock the front wheels of the car and release the hand brake and raise both rear wheels clear of the ground by jacking under the Centre casing of the rear axle. Place a block of wood or trestle under the centre of each of the rear springs, care being taken not to damage the spring gaiters.

(ii) Remove one rear wheel and then unscrew the three countersunk headed retaining screws from the face of the brake drum and withdraw by hand the wheel hub and then the brake drum.

(iii) Unscrew the five 5/16" B.S.F. nuts from the bolts (5 Fig.1) lying inside the recess in the dust cover at the rear of the brake carrier plate and gently draw out all the bolts which retain the axle shaft bearing housing (2) and the brake carrier plate (1) to the axle tube (4).

(iv) Holding the brake carrier plate in position, carefully withdraw the axle shaft assembly by hand until the shaft is clear of the leather oil seal fitted to the centre casing of the axle and then fully withdraw the assembly. Immediately replace four of the five bolts removed to secure the brake carrier plate to the axle tube, line up (centralise) the five holes in the brake carrier plate with those of the axle tube and fully tighten up the nuts of the bolts. Washers will have to be included in order to be able to tighten up the four nuts. Plug up the end of the axle tube with clean rag. Using the three flute twist drill, open up together the uncovered hole in the brake carrier plate and axle tube to 0.375" + 0.005 and temporarily fit one of the new $\frac{3}{8}$" diameter bolts, KB.11067/Z to the carrier plate and tube and tighten up the nut.

Remove each of the remaining 5/16" diameter bolts in turn and follow the same procedure i.e. after opening up a hole, fit one of the new bolts and tighten up. Remove the five new bolts and lightly chamfer the holes on the outer face of the carrier plate and the rear face of the axle tube to remove keen edges. A ¾" (19 m/m) diameter spherical headed rotary file is recommended for this purpose.
NOTE: The use of a three flute twist drill is quite satisfactory without reaming.

(v) Plug up the bearing housing (2 Fig.1) of the axle shaft assembly with clean rag so as to prevent the entry of drilling swarf and then open up the holes in the flange of the bearing housing to the same dimension i.e. to 0.375" + 0.005" and lightly chamfer the inner face to remove keen edges. Using a small round file, chamfer the holes on the outer face of the bearing housing to allow for the radius under the heads of the bolts.
Blow out with compressed air the brake mechanism and the bearing housing to remove all traces of swarf and then remove the rag plugs from the bearing housing and axle tube.

(vi) Lightly smear the axle shaft the whole of its length with engine oil but do not add any additional grease to the bearing assembly. With the distance piece (3) in position in the bearing housing, carefully enter the shaft into the axle, at same time feeling for the centre of the oil seal fitted to the centre casing of the rear axle. (The tip of the leather seal points towards the centre of the axle.), then carefully enter the splines of the shaft into the corresponding splines of the bevel wheel and secure with the new bolts, Grover washers and nuts. The nuts must be fully tightened up, using a ⅜" (B.S.F.) box spanner 1½" (38 m/m) long. The distance from the centre of the hole for the tommy bar to the spannering end of the spanner, must be 1¼" (31.7 m/m). The end of the spanner to be ground away as necessary so that it clears the recess in the dust cover and fits snugly on the nuts. This information is important as a ring or jaw spanner must not be used for this purpose.

2. TO REVERSE THE EQUAL WEAR LINKAGE OF THE REAR BRAKES AND FIT THE STIFFENED TYPE PUSH ROD AND JAW.

(i) Carefully draw away the rubber dust cover from the rear brake expander and slide it along the brake rod and then slide the rubber sealing ring along the outer end of the expander. Remove the four 5/16" B.S.F. nuts holding the dust cover to the brake carrier plate and slide the cover along the axle tube out of the way.

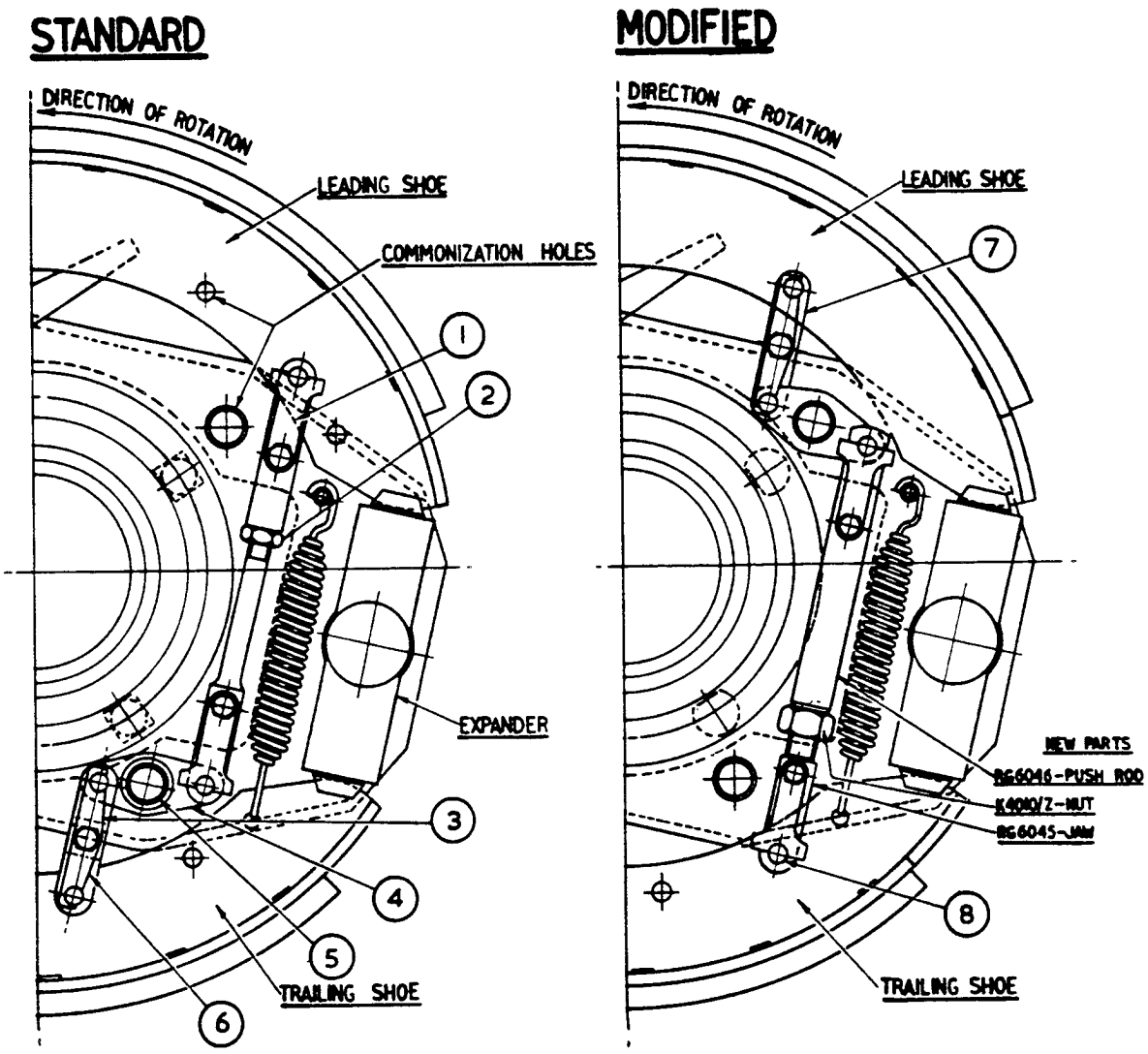

FIG. 2.

(ii) Unscrew the two setscrews retaining the locking plates (1 & 6 Fig.2) on the inter shoe linkage nearest each shoe and pull out the pins holding the links to the shoes and withdraw the complete linkage away from its pivot (5). Do not disturb the setting of the push rod by turning the jaw relative to the rod. It is advisable before removing the linkage, to check the locknut (2) on the push rod for tightness.

(iii) With a 7/16" (B.S.F.) cranked ring spanner, remove the locknut, the Grover and plain washer from the back of the pivot (5) and transfer the pivot from its position just above the lower or trailing shoe to the existing hole in a similar position just below the upper or leading shoe. (See "Modified" Drawing Fig.2).

PRINTED IN ENGLAND

NOTE: Should it be found that further clearance is required for spannering purposes between the rear dust cover and the locknut at the back of the pivot, unscrew the locknut on the handwheel and then unscrew the handwheel from the adjuster screw and move the dust cover further towards the centre of the axle.

(iv) Still without disturbing the setting, remove the push rod complete from the pivot lever (4). Place one of the $\frac{3}{8}$" nuts K.4010/Z on to the new jaw and fit the new push rod and jaw to the pivot lever and adjust the length until it is the same from pin hole to pin hole as the original rod and tighten up the locknut. Since the finest adjustment is half a turn, any error should be such that the new push rod is shorter than the old, rather than longer.

(v) Refit the linkage complete to the pivot in its new position which will result in the short link (7 Fig.2.) now being attached to the leading shoe and the push rod to the trailing shoe. The necessary holes already exist in the shoe rib, since all shoes are common to any position.

3. TO CHECK THE ADJUSTMENT (CONCENTRICITY) OF THE BRAKE SHOES:

(i) The reversing of the brake linkage may in some cases result in unequal adjustment between the leading and trailing shoes and prevent proper contact of the liners with the drum. It is therefore recommended that the brake shoes are checked for concentricity in relation to the axis of the axle shaft. To carry out this check, a simple trammel (with sufficient rigidity) with a pointer, adjustable for preference, will be required. The trammel could be attached to two of the road wheel studs on the flange of axle shaft. If upon checking with the trammel, it is found that the adjustment of the shoes needs correcting, then proceed as follows :-

a) With a 3/8" (B.S.F.) off-set ring spanner, slacken back from three quarters to a full turn, the two hexagon headed setscrews which retain the adjuster unit to the brake carrier plate which will allow the adjuster unit to rotate slightly on its spigot.

b) Fit the brake drum, ensure that it is fully home and then fit the three countersunk headed retaining screws to the drum and tighten up.
Should any difficulty be experienced in fitting the drum, then slacken back the hand adjustment wheel of the adjuster.
NOTE: Should the handwheel have been removed, then refit it ensuring that it is screwed up fully home and secure it with the locknut.

c) Screw up the handwheel by hand as tightly as possible which will lock the drum and centralise the adjuster and then apply the handbrake and tighten up the two hexagon headed setscrews which retain the adjuster unit to the carrier plate. Release the handbrake.

d) Slacken back the handwheel until the drum is free and remove the drum.

e) Check the shoes with the trammel. If it is found that one of the shoes is nearer to the pointer of the trammel than the other, then it will be necessary to lengthen or shorten the push rod of the inter linkage to equalise the shoes, i.e. if for example, the leading (upper) shoe is closer to the trammel than the trailing (lower) shoe, then it will be necessary to lengthen the push rod half a turn at a time until both shoes are centralised, but if the trailing shoe (lower) is found to be nearer to the trammel, then the rod should be shortened.

(ii) Inspect that all pins, locking plates of the inter linkage have been fitted and that the three locking plates have been secured with the spring washers and setscrews.

(iii) Re-assemble the dust cover and replace in position the rubber sealing ring and the rubber dust cover. Refit the brake drum and wheel hub.

(iv) Spin the drum to ensure the brake setting has not been accidentally disturbed, then fit the wheel and disc.

(v) Repeat for the opposite side.

(vi) Finally check the external adjustment of the brakes.

MODIFICATION.

For Category 1 Action:

a) Rear Axle Retaining Bolts. } Addendum.
b) Rear Brakes - Equal Wear Linkage }

In addition to carrying out the modifications as detailed in Bentley Service Bulletin No: BB-73 (Section L), it has also been decided to reduce the nip on the outer race of the ball bearing on the axle shaft to zero by reducing the width of the distance (adjusting) piece, (3 Fig.1 of Bulletin BB-73) from 0.002" to 0.003" (0.050 m/m to 0.076 m/m) whatever the width of the distance piece may be found to be.
NOTE: It is essential that each individual distance piece is refitted to the axle shaft assembly from which it was removed.
Fig. 1 (below) is a section through the distance piece fitted to the ball bearing assembly of the axle shafts for chassis series 'AK', 'AJ', 'BH' and 'BG' and Fig. 2 is a cross section through the distance piece fitted to the ball bearing assembly of the axle shafts for series 'CF', 'CD' and onwards.

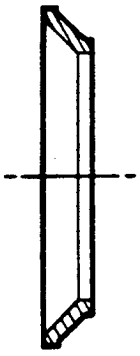

FIG. 1.

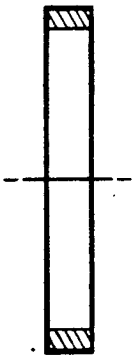

FIG. 2.

Procedure:

(i) After the removal of an axle shaft as described in Bulletin No: BB-73, remove the distance piece from the ball bearing housing which is a free fit.

(ii) Carefully measure the width of the distance piece and reduce the width by machining 0.002" to 0.003". The distance piece is made of mild steel. In the unlikely event of machining facilities not being available, then it will have to be carefully reduced by hand, keeping the faces parallel.

(iii) Repeat for the opposite side.

NOTE: The recommended tommy bar length for the box spanner described in sub-paragraph vi on page 3 of Bulletin No: BB-73 is 6" (152 m/m).

NOTE:

(a) ⅜" dia. rear axle retaining bolts are fitted on production to Chassis No: B-273-EW. and all subsequent chassis.

(b) Reversed and strengthened equal wear linkage is incorporated on production on Chassis No: B-493-DZ and onwards.

All chassis numbers between B-493-DZ and B-273-EW will therefore require the fitting of ⅜" rear axle retaining bolts only.

FOR INFORMATION:

INSTRUCTIONS FOR FITTING NEW CROWN WHEEL AND PINION ASSEMBLY TO BENTLEY MARK VI.

For the purpose of this instruction, it is assumed that the Rear Axle is already dismantled, also that the Bevel Pinion has been assembled.

The pinion measurement will be found etched on the radius of the bevel pinion nose. N.B. When taking any measurements in this operation, great care is necessary as the slightest discrepancy will result in noisy gears.

1. Remove bevel pinion nose bearing from housing in the axle casing.

2. Remove off-side thrust bearing.

3. Remove the thrust bearing from the near-side (L.H.) side plate, and refit the side plate to the axle casing, using all the clamping bolts. A distance piece will be required for the clamping bolts, as the (R.H.) side plate is removed.

4. Set up the pinion adjusting tool as shown in the sketch with the two side location pieces fitted into the bearing housings and the centre piece facing the pinion nose.

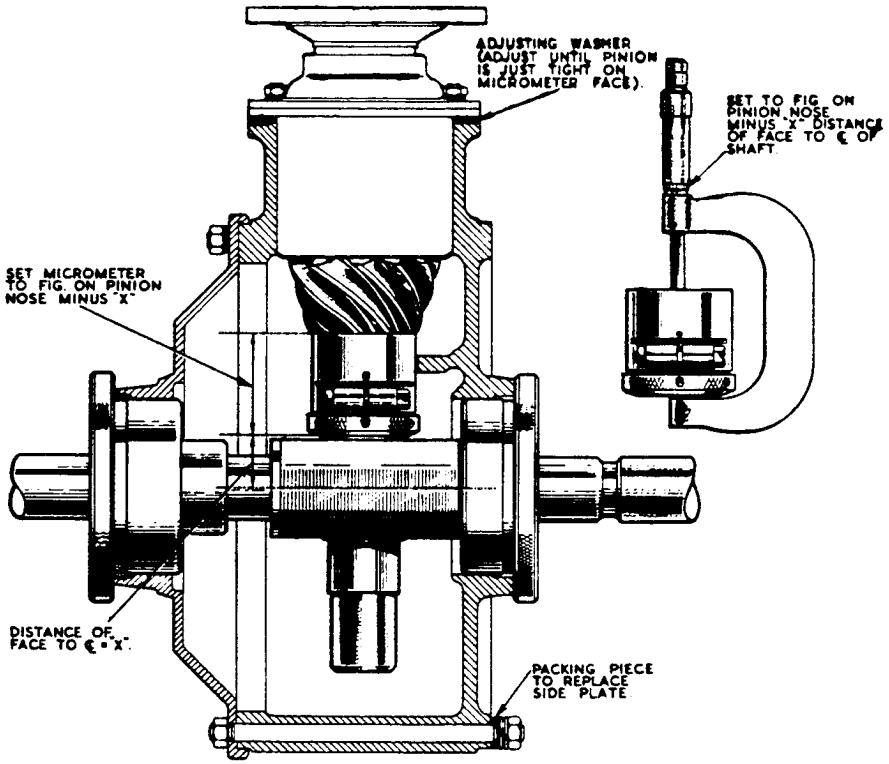

5. Set the measuring piece as follows:-
Subtract 1.00" (the distance X in the sketch) from the measurement etched on the pinion nose, and set the overall length of the micrometer nose piece to this difference.

NOTE: The figure on the pinion nose will be about 2.900"

6. Place the micrometer nose piece on the pinion nose and refit the bevel pinion to the axle casing. Press the bevel pinion on to the centre bar so that the micrometer nose piece just turns when the pinion is lightly turned by hand. (No excessive pressure is required.)

7. Measure the gap between the bevel pinion housing and the face of the axle case. If it is found that the existing washer is too thick, it can be reduced. If it is too small, a new washer of the correct thickness is required.

8. Having obtained and fitted the correct distance washer, secure the bevel pinion to the centre axle casing, using the nine securing nuts. It may be found, after having tightened the nuts around the bevel pinion, that a slight alteration is necessary to the distance washer.

9. Remove the bevel pinion assembly and the (L.H.) side plate, complete with locating piece.

10. Remove the locating piece in the (R.H.) side of the axle case, and the centre bar and measuring piece.

11. Refit the bevel pinion nose bearing to the axle casing.

12. Insert the bevel pinion assembly in the axle case and tighten the nine nuts with the correct distance washer in position.

13. Refit the roller bearing to the off-side of the axle case.

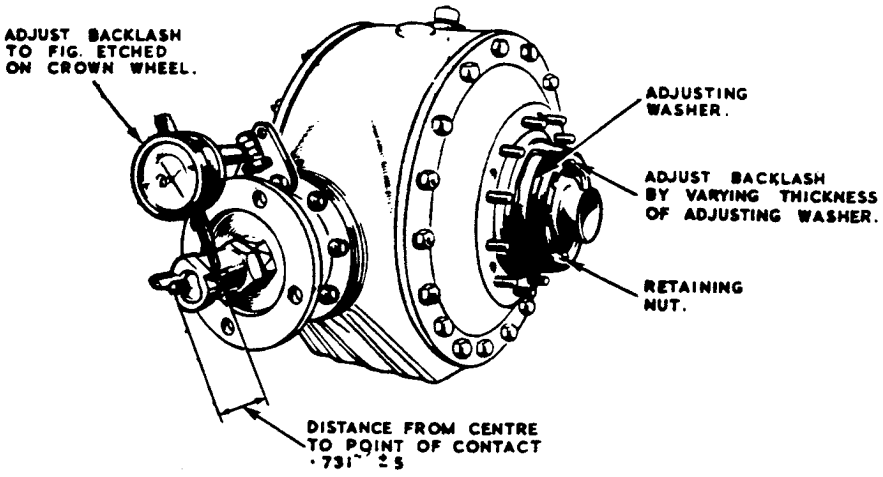

14. Refit the off-side side plate, bearing spring and thrust washer, oil seal and housing, and side shaft tube.

15. Refit the differential assembly to the axle centre case.

16. Replace the (L.H.) side plate and roller bearing outer race and tighten the nuts.

17. Insert the bearing adjusting washer to the near-side and tighten the retaining nut securely.

18. Check for correct backlash using Gauge No. 1649/G1001:-
The required backlash will be etched upon the crown wheel, ranging from .006" to .008". The method of obtaining this, is as follows:-

The adaptor nut of the gauge is screwed on to the thread of the bevel pinion flange securing nut. (One or two threads are left exposed after the securing nut has been tightened) A small lever is attached to the screw device and can be altered by adjusting the clamping nut (See Fig. 2.)

Secure an indicator clock to the axle casing so that the registering member strikes the lever at a radius of .731" ± 5 from the centre of the bevel pinion, (i.e. the registering member should contact the .125" dia. ball) Measure the backlash on the indicator and take twelve different readings by moving the crown wheel to twelve positions. The average of these readings should coincide with that etched upon the crown wheel.

If the backlash reading obtained is too large, then the distance piece behind the thrust bearing in the near-side side plate is too small and needs to be increased. Conversely, if the reading is too small, then distance piece must be reduced.

N.B. It is very important that when carrying out pinion measurements and backlash operations, all nuts must be tight.

FOR INFORMATION:

RECONDITIONING OF REAR AXLE SHAFT ASSEMBLIES.

Hitherto when it has been necessary to renew an axle shaft ball bearing, it has been the practice to replace the complete axle shaft assembly and return the original assembly to the London Service Station for reconditioning. This is because the bearing retaining collar was shrunk on the axle shaft and required elaborate tackle. It has now been decided to press the collar on cold, and providing Retailers have the facilities of a suitable press, they should be able to remove and replace a bearing as described in this Service Bulletin. The load required to press the collar into position is from 6 to 10 tons.

The above cancels the instructions contained in the second paragraph under "NOTE" on page 2 of Sub-Section BL-1 of the Workshop Manual.

BEARING RENEWAL ON 'C' SERIES CHASSIS & ONWARDS:

1. TO DISMANTLE:

(i) With the spigot plate (6 Fig.1) removed from the bearing housing, mount the assembly in a lathe, turn the collar (4) until it is very thin and then split it. This will avoid the turning tool damaging the shaft.

(ii) Bolt the extractor, 733/T1002 to the flange of the housing and withdraw the bearing and housing from the shaft.

NOTE: If it is found after the removal of the bearing that the journal of the shaft is worn (diameter new 1.7726" - .0003" = 45.023 m/m) due to the inner race of the bearing having revolved on the shaft, a complete new assembly should be fitted and the original one returned to the London Service Station for reconditioning by a special salvage scheme.

If the oil seal (fitted to the rear axle) has worn a small groove on the axle shaft where the leather seal makes contact, this can be improved by lightly blending the groove providing it is not too deep.

2. TO ASSEMBLE:

For parts required, See Para. 3.

(i) With a micrometer, measure the width of the outer race of the old and new bearing. The variation in outer race width should not exceed .002" = .05 m/m) (maker's figure). If the new bearing is wider, a similar amount should be ground off the adjusting piece (2 Fig.1), but if it is narrower or of identical width, the adjusting piece can be refitted without alteration. A .002" end float of the adjusting piece, between the outer race of the bearing and the spigot plate, could arise from this procedure which is permissible.

(ii) If for any reason the bearing housing or the spigot plate is to be replaced, then proceed as follows:-

a) Press the new bearing FULLY HOME into its housing and bolt the housing to the spigot plate with no adjusting piece fitted.

b) Place the sub-assembly on a surface plate with the spigot plate uppermost and clock the top face of the spigot plate (See Fig. 2). Fit a new adjusting piece (RG-3181), bolt up as before, and again clock the face of the spigot plate. An amount equal to the difference in clock readings should then be ground off the adjusting piece. The aim is to obtain zero nip on the bearing, but a nip NOT EXCEEDING .002" (.05 m/m) is permissible.

(iii) Next place the distance piece (8) on to the axle shaft followed by the housing complete with bearing and press the bearing fully home. Fit the spring plate (3), making sure it is positioned the correct way round (See Fig.1).

(iv) Squarely press on the collar (4) until it is also fully home which will automatically flatten out the spring plate. (Do not lubricate bore of collar prior to pressing it on).

(v) Place the adjusting piece (2) in position and attach the spigot plate (6) to the housing by means of two bolts to keep the adjusting piece and spigot plate to its correct assembly.

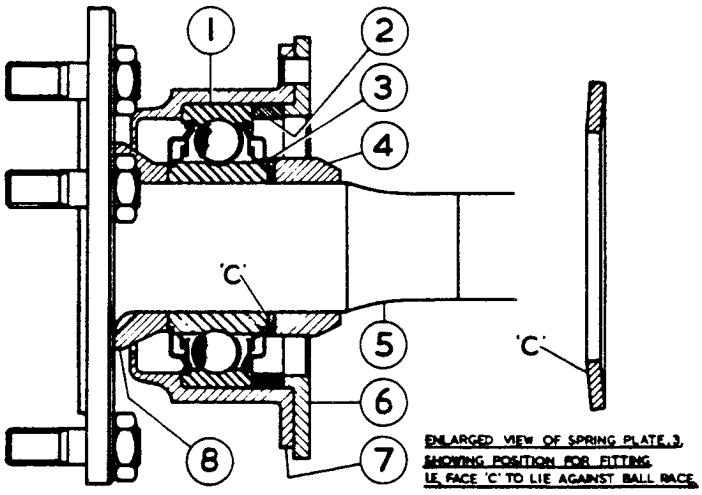

FIG. 1. SECTION - REAR AXLE SHAFT ASSEMBLY.

NOTE: It is suggested that "pressing-on" tackle (not supplied) should be made in accordance with details given on Figs. 3 or 4. The best method of pressing on a bearing and collar is (providing a suitable hollow press is available) to place the sleeve (Fig.3) on the bed of the press with the axle shaft pointing downwards. If a hollow press is not available, then the details as shown on Fig.4 should be made up. The steel tube is of sufficient length to cover a Silver Wraith R.H. side axle shaft assembly, this being the longest.

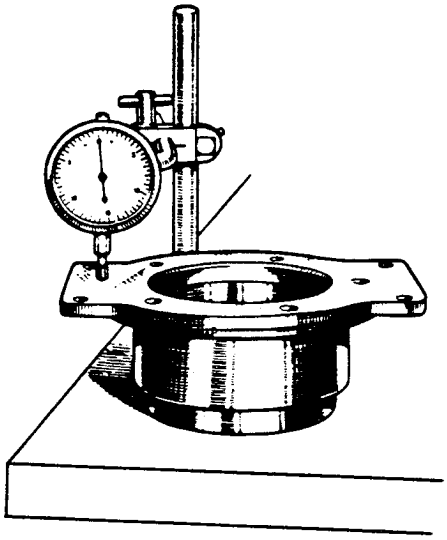

FIG. 2. CLOCKING TOP FACE OF SPIGOT PLATE.

A circular block $4\frac{1}{2}$" diameter by $1\frac{1}{4}$" thick (approximately) should be placed beneath the flange of the axle shaft to protect the wheel studs when using the steel tube.

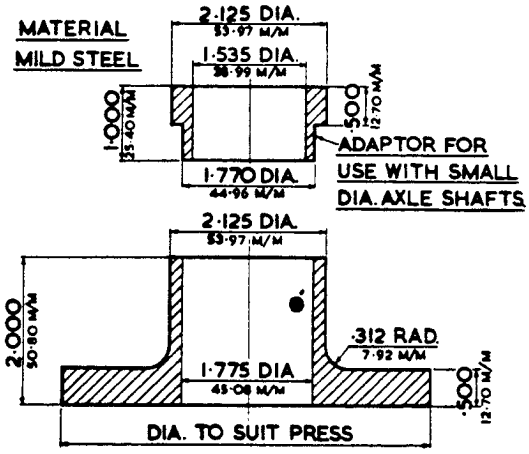

FIG. 3. SLEEVE AND ADAPTOR.

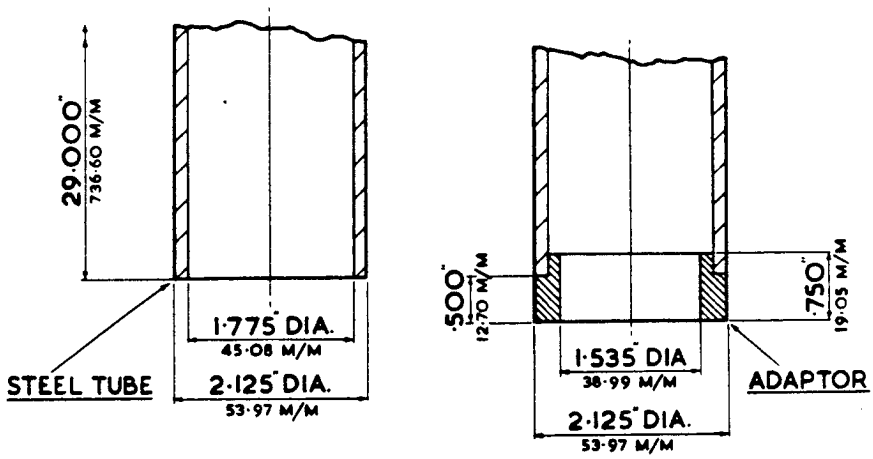

ENDS OF TUBE AND ADAPTOR TO BE SQUARE WITH AXIS.

FIG. 4. STEEL TUBE & ADAPTOR. (ADAPTOR FOR USE WITH SMALL DIAMETER AXLE SHAFTS).

3. PARTS REQUIRED:

Part No.	Title.	No. off per axle shaft assy.	Illustration No.
RG-5365 or RG-6986	Ball Bearing.	1	1 Fig. 1.
GB-4955	Spring Plate.	1	3 " "
GB-4956	Collar.	1	4 " "

NOTE: 'C' and later series assemblies are quite suitable for replacements on 'A' and 'B' series chassis.

4. SPECIAL PROCEDURE TO BE ADOPTED FOR 'A' & 'B' SERIES CHASSIS AXLE SHAFT (ASSEMBLIES.

Smaller diameter axle shafts and bearings were fitted to 'A' and 'B' series assemblies although certain cars may have had the axle shaft assemblies of 'C' series type fitted as replacements. The small bearing type can be identified by the external shape of the housing(See 'A' Fig.6).

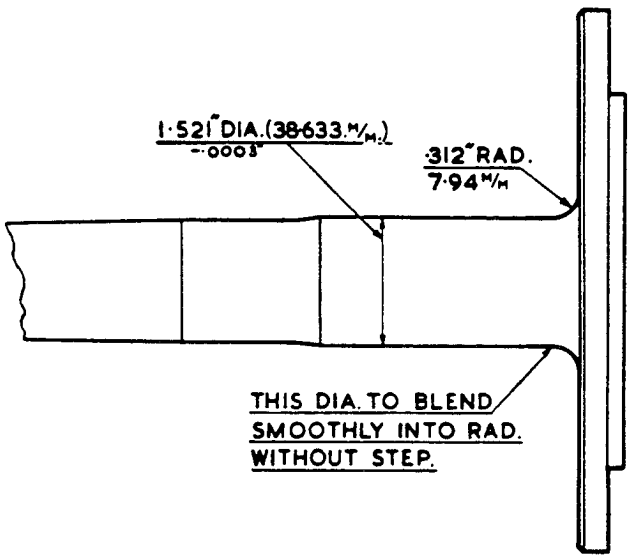

FIG. 5. SECTION-REAR AXLE SHAFT SHOWING GRINDING DIMENSION.

Unless facilities exist for regrinding the bearing journal of the shaft, there is no point in dismantling the assembly for bearing renewal and if Overseas, it should be discarded in favour of a complete new assembly. Home Retailers should return the old assembly to the London Service Station for modification. Where grinding facilities exist, the bearing should be removed in the usual manner, the shaft re-ground on its journal to the dimension shown on Fig.5, and a special bearing of large track diameter fitted. This will necessitate a 'C' series housing and other details itemised in Para. 5.

After grinding the shaft, proceed to carry out the instructions described in Sub-paras. ii, iii, iv and v of Para. 2.

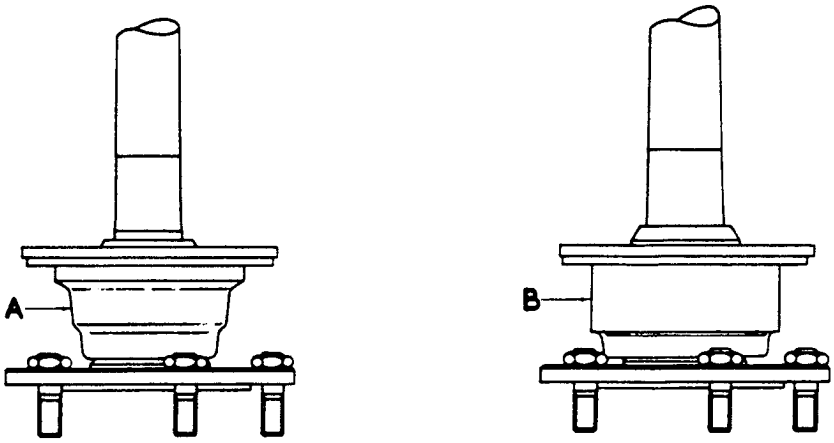

FIG. 6. VIEW SHOWING DIFFERENCE IN EXTERNAL SHAPE OF BEARING HOUSINGS 'A' SMALL BEARING 'B' LARGE BEARING.

5. PARTS REQUIRED: ('A' & 'B' SERIES AXLE SHAFT ASSEMBLIES)

	Part No.	Title.	No. off per axle shaft assy.	Illustration No
.x.	RG-6981 or	Ball Bearing.	1	1 Fig. 1.
.x.	RG-6974			
	RG-7021	Housing - ball bearing.	1	7 " "
	RG-6982	Distance piece.	1	8 " "
.x.	RG-3373	Spring plate.	1	3 " "
.x.	RG-6975	Collar.	1	4 " "
	RG-3181	Adjusting piece.	1	2 " "

.x. These parts only required if the assembly has been previously modified.

FOR INFORMATION:

RECONDITIONING OF REAR AXLE SHAFT ASSEMBLIES.

ADDENDUM

The following is additional information to that contained in Paragraph 4 of Service Bulletin No.BB-134 (Section L).

(i) Prior to grinding the journal, mount the axle shaft between the centres of a lathe, and with a dial indicator (clock), check the shaft for true running at approximately the centre of it. If the shaft is found to be bowed more than .002" (.05 m/m), it should be straightened (cold) under a suitable press. The required load to straighten will be about 4 tons (4064 Kilos).

(ii) Depending upon the type of grinding equipment available, it may be found necessary to remove the five wheel studs before the journal of the shaft can be ground in which case, the following new parts will be required.

Right-Hand Side Axle Shaft:

Part No.	Title.	No.Off.	
GB-3832	Wheel stud.	5	The threaded portion of these studs on to which the wheel retaining nuts are fitted, have a RIGHT-HAND thread.
K-4322/Z	Nut.	5	

Left-Hand Side Axle Shaft:

Part No.	Title.	No.Off.	
GB-4468	Wheel stud.	5	The threaded portion of these studs on to which the wheel retaining nuts are fitted, have a LEFT-HAND thread.
K-4322/Z	Nut.	5	

NOTE: A right-hand side axle shaft is 3.950" (100.3 m/m) longer than a left-hand side axle shaft.

(iii) If the journal of the shaft can be ground with the studs in position, the studs should however be checked (in position) for correct alignment. A bent stud should be replaced. After fitting a new stud and FULLY tightening up the nut, the latter must be locked to the stud by centre punching the metal in four convenient positions.
NOTE: It has now been decided that the bore of the ball bearing and the collar should be lubricated with a straight S.A.E.30 engine oil prior to pressing them on to the axle shaft.

After pressing on the collar, apply a final load of 15 tons (15240 Kilos) to ensure that the distance piece, bearing, spring plate and the collar are in firm contact with one another.

DATA.

	Ins.	m/m.
		New
'A' & 'B' SERIES CHASSIS AXLE SHAFT ASSEMBLIES:		
a) Axle shaft bearing bore diameter.	1.5196 / 1.5201	= 38.597 / 38.610
b) Axle shaft diameter at bearing journal.	1.5207 / 1.521	= 38.626 / 38.633
Interference fit between axle shaft bearing & shaft.	.0006 / .0014	= .016 / .035
c) Diameter of bore of axle shaft collar.	1.5167 / 1.5177	= 38.523 / 38.549
Interference fit between collar & axle shaft.	.003 / .0043	= .077 / .109
'C' SERIES CHASSIS AXLE SHAFT ASSEMBLIES:		
a) Axle shaft bearing bore diameter.	1.7712 / 1.7717	= 44.998 / 45.011
b) Axle shaft diameter at bearing journal.	1.7723 / 1.7726	= 45.017 / 45.023
Interference fit between axle shaft bearing & shaft.	.0006 / .0014	= .016 / .035
c) Diameter of bore of axle shaft collar.	1.768 / 1.7685	= 44.906 / 44.919
Interference fit between collar and axle shaft.	.0038 / .0046	= .098 / .117

FOR INFORMATION:

AIR CLEANERS.

Attention is drawn to the difference in air cleaners as fitted to the engines of 'A' and 'B' series Bentley Mark VI and their effect on carburation.

'A' series cars, that is B-AK and B-AJ chassis numbers are fitted with an air cleaner of Bentley manufacture (Fig.1). An engine thus fitted will have carburetter jet needles S.U. type LB1.

'B' series cars and subsequent series, that is B-BH, B-BG chassis numbers and onwards are being fitted with a cleaner of A.C. manufacture (Fig.2) which, having different air flow characteristics to the Bentley type, requires type SC carburetter jet needles to give the correct fuel/air ratio.

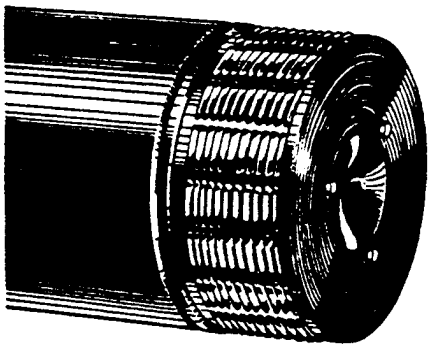

Fig.1.
BENTLEY AIR CLEANER.
USE JET NEEDLES TYPE LB1

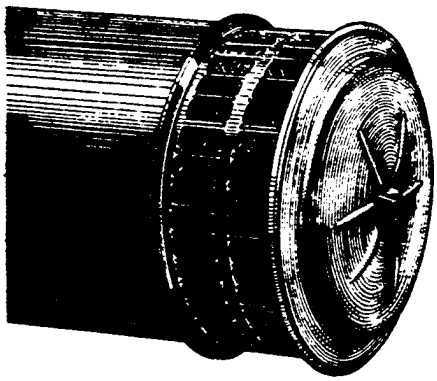

Fig.2.
A.C. AIR CLEANER.
USE JET NEEDLES TYPE SC

The A.C. type cleaner will be supplied against all orders for replacements and if required for fitting to an 'A' series car, it should be noted that the carburetter jet needles will have to be changed to type SC.

The identification markings LB1 or SC are stamped on the head of the plain portion of the jet needle which locates in the air valve.

OIL BATH AIR CLEANER.

FOR INFORMATION:

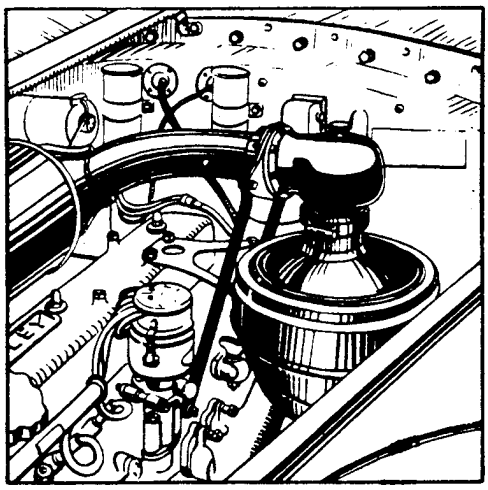

FIG. 1.

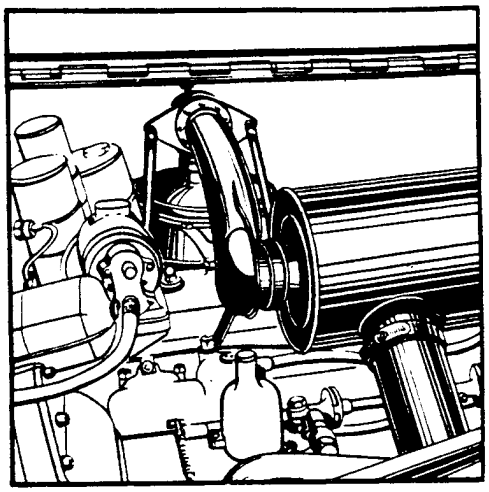

FIG. 2.

Retailers are advised that an Oil Bath Air Cleaner is available at additional cost as an alternative to the standard Air Cleaner.

The higher degree of filtration provided by the Oil Bath, gives greater protection to the engine against the abrasive effect of dust and sand, and consequently lengthens the working life of the engine. We therefore recommend this fitting for use in territories where such conditions prevail.

FIG. 3.

Provision can be made for the Oil Bath Air Cleaner to be fitted to customer's order before delivery, or alternatively the necessary material can be supplied for incorporation after delivery.

When this cleaner is fitted, it is necessary to modify the carburettors to counteract the difference in the rate of air flow and maintain the standard of carburation and performance.

The completed assembly is shown in Figs.1,2 & 3, and the procedure for modifying the carburettors and fitting the Oil Bath Air Cleaner, together with a list of the parts required, follow on Pages 2 to 6.

PRINTED IN ENGLAND

MODIFYING THE CARBURETTORS:

It is advisable to complete the modification of each carburettor separately to avoid interchanging the air valves, air chambers, etc.

PROCEDURE:

1. Remove carburettor air intake.

2. Remove the carburettor air chamber and valve.

3. Mark off in position the segment of the air valve plate (A) indicated in Fig.4. The chord of the segment, shown by the dotted line, is 1.500" (38.1 m/m) and is parallel to the face of the carburettor intake flange.

4. Remove the two countersunk screws securing the air valve plate and lift off the plate.

5. Grind off segment as indicated in Fig.4. (Grinding is recommended to obviate the risk of distortion caused by holding this plate in the vice to use hacksaw and file).

6. Plug the air passages (B) in Fig.4 with prepared aluminium plugs. These plugs must be flush with the surface or slightly countersunk to avoid interfering with the seating of the air valve plate. It is recommended that the holes be taper reamed and suitable plugs be prepared, so that when tapped lightly home, they do not project above the face.

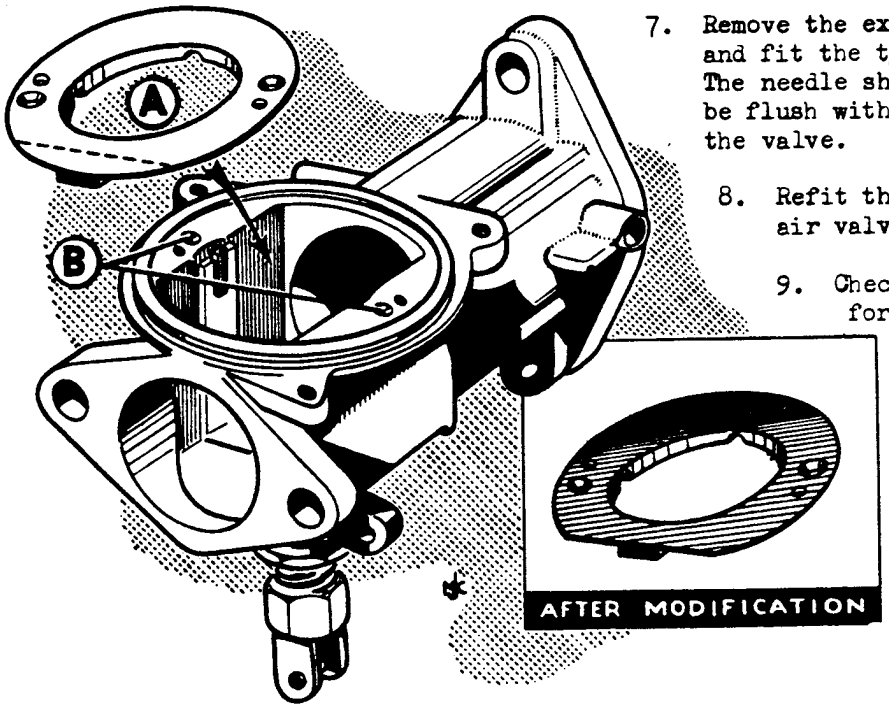

7. Remove the existing needle and fit the type SE supplied. The needle shoulders should be flush with the face of the valve.

8. Refit the valve plate, air valve and chamber.

9. Check the air valve for freedom.

FIG. 4.

PRINTED IN ENGLAND

There is a possibility that during the removal of the segment from the air valve plate, slight distortion may have taken place. This will cause the air valve to stick due to a foul in the bore. To overcome this fault, mark the fouled bore by raising and lowering the air valve several times and remove the hard marks from the bore with a suitable half round scraper.

10. Refit the carburettor air intake.

FITTING THE OIL BATH AIR CLEANER:

When this type of air cleaner is fitted, it is necessary to re-position the oil syringe and grease gun, which are clipped to the inside of the wing valance on the left-hand side, to facilitate the removal and refitting of the oil bath air cleaner bowl and element.

The grease gun clips are moved to the forward side of the oil can, to the position shown in Fig.5. The oil syringe clips are removed and refitted to the ledge of the wing valance so that the handle of the syringe, when clipped in position, will be approximately on the centre line of the original grease gun position.

The clips for carrying these tools are riveted to the wing valance. The rivets should be drilled out, the holes filled with suitable aluminium plugs, and the clips fitted to the new positions with 2-BA countersunk setscrews of a suitable length.

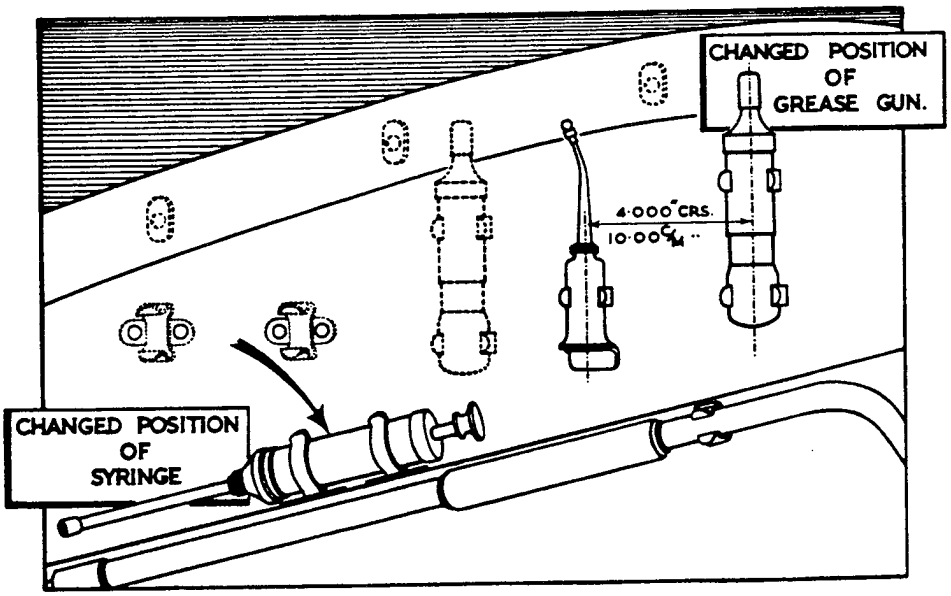

FIG. 5.

PROCEDURE:

1. Remove the existing air cleaner complete.
2. Remove the rocker cover and breather if fitted.
3. Drain the coolant system.
4. Disconnect the car heater feed pipe from the tap at the rear end of the cylinder head.
5. Remove Nos.4 and 6 cylinder head core plugs.

   (The two holes in the core plug are provided for tightening the plug with a two-pin spanner on initial assembly. They are not intended for use in removal, since under normal conditions, removal should not be necessary. The plug is fitted with jointing compound, and it is anticipated that withdrawal may be difficult. If the existing holes are joined by chain drilling, a broad metal strip can be used as a screwdriver with a large adjustable spanner to provide leverage. Plugs may sometimes be loosened by tapping with an aluminium drift before unscrewing).
6. Fit the special studded core plugs with aluminium washers and jointing compound.
7. Tighten the car heater tap through approximately 15° so that when the pipe is attached, it will clear the rear core plug stud. Attach the pipe.
8. Fit the replacement rocker cover with a new joint washer and transfer the chromium plated set bolts from the original cover to the unused threaded bosses on the new cover. If a rocker cover breather is fitted, remove the core plug in the replacement rocker cover and fit the breather.
9. Remove the forward support bracket from the original air cleaner and fit to the air silencer. (If this bracket is riveted to the cleaner, as on AK and AJ chassis series, a new bracket is supplied).
10. Assembly the transverse pipe and elbow with the oval support plate inserted between the flanges and a vellumoid joint washer on each side.
11. Place a rubber sealing ring and Jubilee clip on the banjo end of the transverse pipe, assemble loosely to the rear of the silencer, and fit the silencer to the induction pipe with the sealing ring and clip from the original air cleaner. Secure the front support bracket.
12. Fit the support legs to theoval support bracket, secure the lower ends to the studded core plugs, tighten the Jubilee clip at the banjo end and tighten the banjo support leg.

13. With the lugs downwards, fit the strap to the top half of the oil bath with the set screws and spring washers and bolt the 'Y' shaped bracket to it. (The set in this bracket should be downwards).

14. Place a rubber sealing ring and 'Jubilee' clip on the transverse pipe elbow, assemble the upper half of the oil bath to the elbow and secure the bracket to the rocker cover.

15. Fill the base chamber with oil to the correct level with a viscosity S.A.E.20 oil as used in the engine, insert the filter element and fit into position securing with the long bolt passing through the elbow.

16. Radius the bonnet support rod, which is clipped to the inside of the wing valance, sufficiently to clear the oil bath, making allowance for engine oscillation under running conditions.

17. Warm up the engine, check the slow running and adjust if necessary.

PERIODIC MAINTENANCE:

The oil container and filter element will require periodic cleaning. When they are removed for this purpose, the oil container should be emptied and carefully cleaned, and the filter element should be thoroughly washed in petrol and allowed to dry. The oil container should then be refilled to the indicated level with a viscosity S.A.E.20 oil.

The specific intervals at which cleaning will be necessary will be dependent upon prevailing conditions and will be more readily determined by experience in the territory in which the car is used.

It is suggested that inspection should be made initially at short intervals of about a fortnight, to provide information for establishing maintenance periods in a particular area. The information thus gained may form the basis for action on all subsequent cars fitted with an oil bath air cleaner.

The following list of parts may be used for ordering replacements or checking the material supplied:-

1	RE.6196	Rocker Cover with RE.5464 Breather Insert	Supplied Assembled
2	KB.399	Studs.	Studs to secure 'Y' bracket to rocker cover
1	KB.7305	Core Plug	
1	RE.5151	Rocker Cover Joint	
1	RE.6725	Air Silencer	
1	RE.6206	Air Cleaner	
1	RE.6275	Strap	Strap for securing 'Y' bracket to upper part of Oil Bath Air Cleaner
3	KC.201	Setscrews	
3	K.9008	Washers	
1	RE.6275	Banjo Tube Assy	
1	RE.6269	Plate	
2	RE.6270	Washers	Vellumoid washers
1	RE.6278	Elbow	
8	K.131	Bolts	Securing Banjo pipe to Elbow with Plate and Vellumoid washers interposed.
8	K.4307	Nuts	
8	K.9006	Washers	
1	RE.6277	Bracket	'Y' shaped bracket
2	RE.6276	Stays	Support stays from oval plate to special core plugs.
2	RE.6264	Plugs	Special core plugs and aluminium washers.
2	E.27491	Washers	
4	KA.201	Bolts	To bolt top of support stays to plate and to fix 'Y' bracket to strap on Air Cleaner
4	K.4310	Nuts	
4	K.9008	Washers	
2	K.4008	Nuts	Securing support stays to special core plugs
2	K.9008	Washers	
2	KB.3905	Washers (Chamfered,plain)	
2	K.4310	Nuts	Securing 'Y' bracket to studs on rocker cover.
2	K.9008	Washers	
1	RE.6732	Jubilee Clip	Elbow to Oil Bath Joint
1	RE.6271	Sealing Ring	
1	RE.4805	Jubilee Clip	Banjo Tube to air silencer joint
1	RE.4804	Sealing Ring	
2	SU Jet needles, Type SE.		
1	RE.5608	Support bracket	Necessary for AK and AJ series only where forward support bracket is riveted to the Air Cleaner.
2	KC.201	Setscrews	
2	K.9008	Washers	

FOR INFORMATION.

FUEL PUMP SERVICING

The twin S.U. fuel pumps which are fitted to the chassis side member just to the rear of the battery are protected against the effects of dust and water by rubber sleeves.

In each sleeve there is a small hole to provide ventilation, and there is also an equivalent hole at the bottom of each pump body between the diaphragm and energising coil to prevent internal condensation.

On any occasion when the pumps require attention, these breather holes should be checked to ensure that they are clear and the rubber sleeves should be replaced with the air holes at the lowest point. In addition, it will be noted that the sleeves are not symmetrical at each end, one end having a considerably longer flange. This end should be fitted away from the main body. If the position is reversed, the longer flange may cover the breather hole in the coil casing.

The condensation which takes place if these precautions are not taken, may be sufficient to cause failure of the pumps.

CARBURETTOR JET CORRECTIONS

FOR ALTITUDES ABOVE SEA LEVEL.

FOR INFORMATION.

In various parts of the world, Bentley Mark VI's are operating at altitudes considerably above sea level, and the following information is offered to Agents who have experienced difficulty in obtaining satisfactory carburation from the vehicles in their territories.

Whilst it is true that with an increase in altitude, the mixture strength of a fixed jet type of carburettor, such as the Stromberg fitted to the left-hand drive Bentley Mark VI, tends to become stronger, tests have shown that up to 4,000 ft. above sea level, these engines will operate perfectly satisfactorily without any jet alterations being made.

If at altitudes above 4,000 ft difficulty is experienced in obtaining satisfactory running or petrol consumption, the jets may be changed. Care should be taken however, to ensure that the fault does not lie outside the carburation system, andthat it is actually the carburettor which requires adjusting.

The Stromberg carburettor requires no further adjustment other than a change of main jet for altitude, but it must be borne in mind that whenever an alteration is made to a jet to give satisfactory performance at altitude, a corresponding correction must be made when the car returns to sea level. This may prove inconvenient to Owners who habitually visit localities at sea level and others which are higher up, and in such cases, a jet should be fitted to give the best performance at the altitude at which the car most frequently operates.

The two constant-vacuum S.U. carburettors fitted to the Bentley Mark VI right-hand drive cars, by virtue of their self-adjusting piston chokes, give satisfactory results at altitudes up to 6,000 with sea level settings, and no needle correction is considered necessary. Normal carburettor adjustments are allthat should be required to obtain good performance and slow running at 6,000 ft. or over. When the car temporarily returns to sea level, the Owner can, by moving the mixture control lever a few notches towards the 'Starting' position, regain the correct mixture strength and good slow running without having the carburettor re-adjusted.

The following table will serve as a useful guide when making jet variations for L.H. drive cars.

APPLICATION: SETTING VARIATIONS:

	Sea Level:		4000/7000' above sea level.
Bentley Mark VI(LH) A.C. air silencer	Main Jets. Power Jet. Idle Jets. Idle air bleeds.	.045 broad ring. No. 54 No. 70 No. 60	Main jets .041 broad ring. No change. " "
Bentley Mark VI(LH) oil bath air cleaner.	Main Jets. Power Jet. Idle Jets. Idle air bleeds.	.042 broad ring. No. 57 No. 70 No. 60	Main Jets .040 broad ring. No change. " "

FOR INFORMATION:

MODIFICATION OF AIR SILENCER - AIR INTAKE COUPLING TO PREVENT NOISE TRANSMISSION FROM AIR SILENCER.

Reports have been made in a few instances, of an unusual vibratory noise in the engine of the Bentley Mark VI.

Investigation has proved that this noise is transmitted from the air silencer, and that by pushing with the palm of the hand on the air silencer, whilst the engine is running, the intensity of the noise can be reduced.

The modification suggested to cure complaints of this nature, consists of replacing portion of the air intake coupling with a section of rubber hose, in accordance with the instructions detailed below:-

PROCEDURE:

1. Disconnect the Jubilee clip between the air cleaner and air intake.

2. Remove the air silencer and cleaner.

3. Remove the air intake from the carburettors.

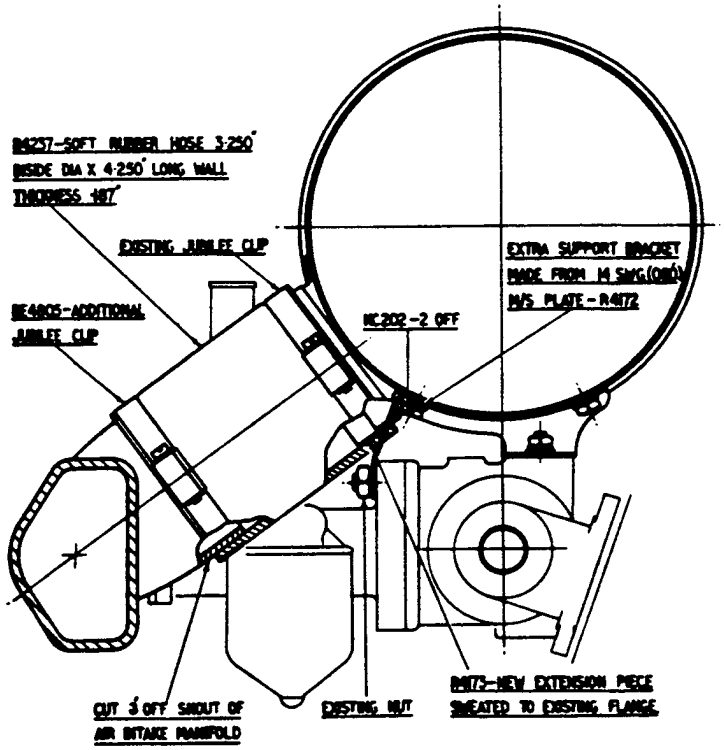

4. Measuring from the face of the joint between the air intake and air silencer, cut 3.000" off the air intake snout.

5. Allowing a 1/2" overlap, slide the new extension piece R-4173, over the existing air silencer coupling flange, and sweat in place, so as to extend the effective length of the air silencer coupling by 1/2". Touch up the joint with black enamel.

6. Refit the air intake to the carburettors.

7. Fit the rubber hose R-4237 over the shortened snout of the air intake.

8. Remove the two existing 3/8" bolts; nearest the coupling flange from the anchor brackets of the air silencer as shown in the illustration. Replace by two longer bolts KC-202 and secure the two new support brackets R-4172 under these bolts, so that the lower portion of the brackets lies vertically.

9. Refit the air silencer. The two extra support brackets should fall opposite two of the 1/2" retaining nuts, between the carburettors and inlet manifold, and should be secured under these nuts.

10. Slide the end of the rubber hose R-4237 over the extended air silencer flange.

11. Secure the two ends of the rubber hose with Jubilee clips.

MATERIALS REQUIRED:

R-4237	Rubber Hose.	1 Off.
R-4172	Support Brackets.	2 "
R-4173	Extension Piece.	1 "
RE-7805	Jubilee Clip.	1 "
KC-202	Bolts 3/8"	2 "

FOR INFORMATION:

INCORPORATION OF RUBBER CONNECTION PIECE BETWEEN AIR SILENCER AND CARBURETTOR TO ELIMINATE VIBRATION - L.H. DRIVE BENTLEY MK. VI

(NOT APPLICABLE TO CARS WITH OIL BATH AIR CLEANERS.)

A few instances of an unusual high pitched vibratory noise in the engine have been reported by owners of left-hand drive Bentley MK. VI cars.

Investigation has shown that this noise is transmitted from the air silencer, and that by pushing on the silencer with the palm of the hand whilst the engine is running, the intensity of the noise can be greatly reduced. (N.B. As a means of guidance, the noise is usually most noticeable at engine speeds approximating to 22/25 m.p.h. and 38/40 m.p.h. in second and third gear respectively).

In order to overcome this trouble, a flexible rubber connection piece for use between the silencer and carburettor has been introduced, and Retailers are recommended to incorporate this whenever dealing with complaints of noise transmission from the air silencer.

This will involve the modification of the existing silencer in accordance with the instructions detailed below.

MODIFICATION PROCEDURE.

NOTE: Figs. 1 & 2 illustrate the air silencer before and after modification and are given as a means of guidance to Retailers when carrying out the following instructions.

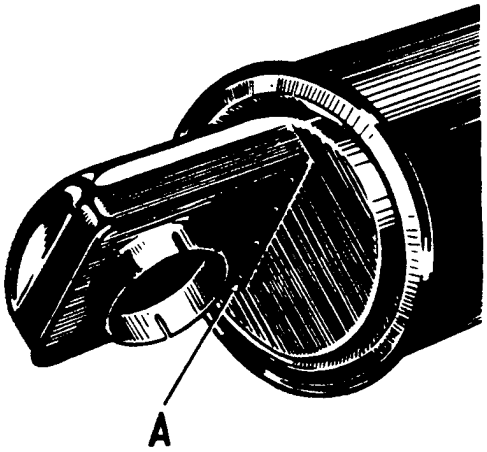

FIG. 1.

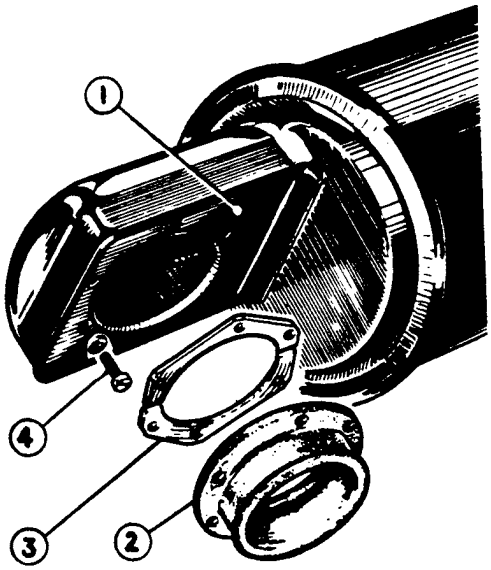

FIG. 2.

1. Slacken the jubilee clip at top of the carburettor, remove the two 1/4" nuts and bolts securing the silencer body to the top of the support legs and remove assembly from engine.

2. Lay the assembly on its back upon a bench, i.e. with the air intake orifice uppermost, and drill away the spot welding at the rear end of the cover plate (points 'A' Fig.1) using a flat nose 1/4" drill. (N.B. Care should be taken to ensure that the drill does NOT penetrate the supporting strip BELOW the cover plate.)

3. Carefully roll back the lapped edge round the existing cover plate and remove plate. Clean up and tin the supporting strip.

4. Clean and tin the new cover plate, RE-9868, (1, Fig.2) to correspond with the supporting strip, fit the plate and sweat in position as shown (the new plate should be fitted with the lip of the orifice uppermost). Roll back the lapped edge as before, and then touch up both plate and edges with black enamel.

5. Pass the new rubber connection piece, RE-9691, (2, Fig.2) through the orifice of the new cover plate, flanged end first, and then coincide the six screw holes in its flange with those drilled in the plate. Next pass the new metal retaining plates, RE-9690 (3, Fig.2) through the orifice of the rubber connection piece, coincide the holes, and secure in position by means of the six 3-BA setscrews (4, Fig.2) supplied.

6. Refit the silencer assembly, using the existing jubilee clip to secure the rubber connection piece to the carburettor air intake.

MATERIAL REQUIRED.

RE-9868	Cover Plate - Silencer Air Intake.	1	Off
RE-9690	Retaining Plate - For Rubber Connection Piece(2 halves)	1	"
RE-9691	Rubber Connection Piece - Silencer to Carburettor.	1	"
K -1804/Z.	Setscrew - 3 BA for above.	6	"
K -9005/Z.	Spring Washer - for above.	6	"

LEFT-HAND DRIVE BENTLEY MARK VI.

STROMBERG CARBURETTOR.

Cases have occurred where a flat spot on acceleration from slow speeds has been traced to insufficient petrol ejection from the accelerator pump, one reason for which may be excessive petrol leakage past the fuel bleed ball valve in the piston. This can be overcome by sealing the inlet passage to the ball valve at 'A' (See drawing below).

Instructions are appended for modifying cars in this manner - the modification being recommended in all cases where the owner complains of poor acceleration or of a flat spot in the acceleration curve at low speeds.

It is necessary for the carburettor to be removed from the car.

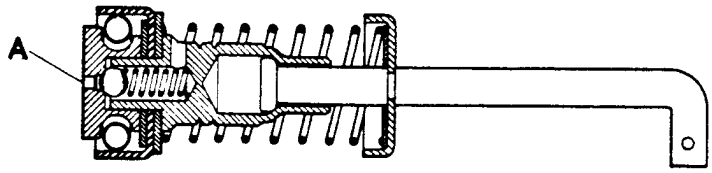

SOLDER AT POINT A

FIG. 1. ACCELERATOR PUMP PISTON - SHOWING BLEED HOLE.

1. Remove the air silencer.
2. Disconnect the fuel feed pipe at the union.
3. Disconnect the throttle control from the throttle body lever.
4. Remove the nut and washer from the strangler spindle and disconnect the lever from the spindle.
5. Remove the carburettor from the manifold.
6. Disconnect all the carburettor linkage - the pump lever screw has a left-hand thread.

7. Remove the carburettor top together with the accelerator pump piston assembly.

8. Seal off with solder the inlet bleed passage as shown in Fig. 1.

9. Replace the carburettor top, taking care not to trap the leather washer between the two faces.

10. Assemble the carburettor and fit to the engine.

Petrol consumption is increased by little more than 1% as a result of this modification.

THE INFORMATION CONTAINED IN THIS SERVICE BULLETIN SHOULD BE ACCORDED TO THE MILLER WORKS AND THE SERVICE STATION STAFF ONLY

FOR INFORMATION:

AUTOMATIC S.U. CARBURETTERS

These carburetters are now fitted as standard equipment on all Bentley cars from "R" series and onwards.

The object of this change is to dispense with the manual control and also to improve the cold starting characteristics.

Description:

The automatic system consists of five main features:-

1. An out of balance butterfly valve in the common air intake pipe.
2. A diaphragm, subject to induction pipe depression, and indirectly coupled to the butterfly valve spindle.
3. A small electro-magnet wired in parallel to the starter relay circuit.
4. A cam for "fast idle", loose coupled to a pick-up lever connected to the butterfly spindle.
5. A bi-metal coil coupled to the butterfly valve and subject to engine coolant temperatures.

The operating sequence is as follows:-

Before pressing the starter button, it is necessary to depress the accelerator pedal, in order to release the "fast idle" cam and allow the bi-metal coil to close the butterfly valve. On releasing the accelerator pedal, the throttle opening is greater than that for normal idling, by virtue of the extra stop resting on the "fast idle cam".

In parallel with pressing the starter button, the electro-magnet is automatically energised and the armature on the butterfly spindle holds the butterfly valve in the fully closed position. Immediately the button is released, the circuit to the electro-magnet is broken, and this, therefore looses its power to hold the butterfly closed.

As soon as the engine is running, the induction pipe depression is exerted on the diaphragm which transmits its energy to the loose lever on the butterfly spindle. The loose lever turns the spindle to open the butterfly valve a predetermined amount, controlled by an adjustment on the diaphragm movement. The power of the diaphragm is such that it opens the butterfly against the loading of the bi-metal coil. Since the loose lever is slotted and its travel is limited, the butterfly spindle can over-ride the movement of the loose lever.

As the engine continues to run, the coolant jacketed pocket into which is fitted the bi-metal coil, will gradually warm up and transmit its heat to the coil, when the bi-metal coil warms up, it will wind up and gradually release the load on the butterfly, which in turn will gradually open.

With the depression of the accelerator pedal for the drive away, the fast idle stop on the throttle shaft will move away from the cam and the cam will fall on to the pick-up lever, coupled by a rod to the butterfly spindle. The loading of the bi-metal coil and the offset of the butterfly have been so arranged that any air flow greater than that required for "fast idle" automatically opens the butterfly against the load exerted by the bi-metal coil, sufficient for engine requirements.

Assembly and Setting Procedure:

Carburetters: (Before installing in position).

1. Fit RE.17011, throttle lever, to front carburetter. Angle of spring anchorage section should be 20° from vertical, throttle closed.

2. Assemble couplings RE.17012/17047 as complete separate units and then fit these to carburetters as shown in Fig. 1. (Illustration, is position with fully closed throttles).

   Give rear carburetter coupling approximately .020" clearance on the carburetter body.

   Insert RE.17008, coupling shaft, into RE.17012 couplings (do not tighten pinch bolts) and fit carburetters to induction pipe.

(In position):

1. Fit air intake and throttle return spring. Screw back throttle stop to allow throttle to close fully.

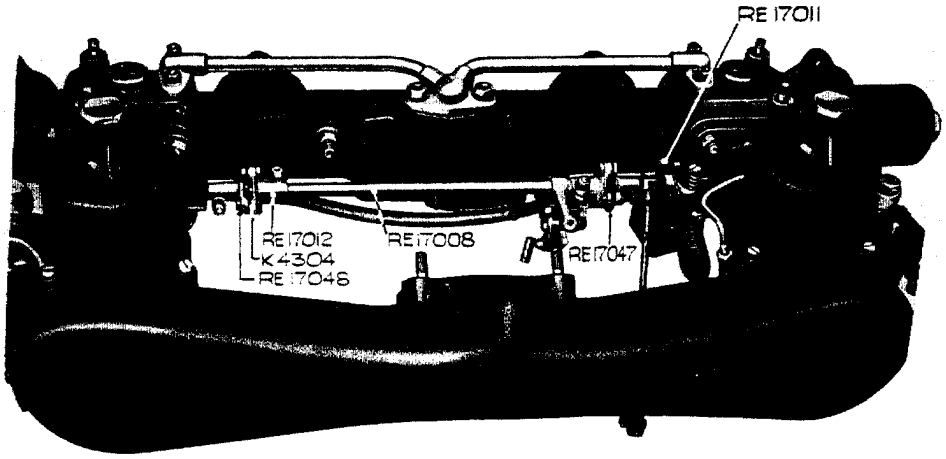

FIG. 1. CARBURETTERS ASSEMBLED.

PRINTED IN ENGLAND

2. With front carburetter throttle fully closed, tighten coupling pinch bolt to give .098" clearance between the fast idle cam and the cam lever, see Fig. 2. The cam adjusting screw hole should be central with the cam face. Hold rear carburetter throttle in fully closed position and tighten remaining pinch bolt in shaft coupling.

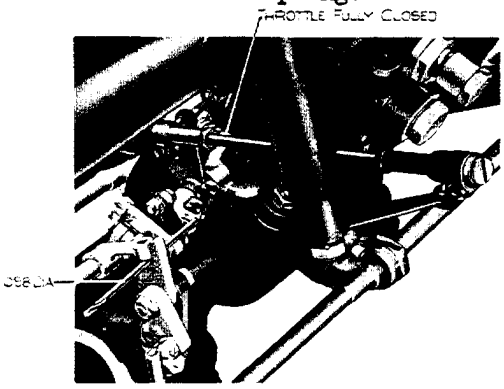

FIG.2. FAST IDLE CAM AND LEVER ADJUSTMENT.

Choke Valve: (Before installing in position)

1. Check that valve makes a reasonably good seal and that it operates freely in the spindle bushes.

2. With the choke valve in the closed position, a small radial clearance, .010", is necessary between RE.13008 pin and the pick-up lever RE.13204, Fig.3. This is obtained by adjusting the length of RE.17003 rod, with the adjusting washers RE.17040/2, Fig. 4.

3. Fit the diaphragm assembly and adjust the "kick-gap" as shown in Fig. 6.

4. With the choke valve in the closed position, adjust the air gap to .004"/.006" between the lever RE.13207 and the Solenoid yoke by using shims RE.17043/5, Fig. 5.

   To ensure a given magnetic flux density from unit to unit with the specified air gap of .004"/.006", it is necessary that the RE.13207 lever and the Solenoid yoke faces must be parallel.

(In position):

1. Fit completed choke valve body to air intake.

2. Fit the depression pipe between kick diaphragm cover and the induction pipe.

3. Fit thermostat unit to housing in induction pipe.

Initial Assembly Adjustments

1. Adjust throttle stop screw to open throttles ½ turn from the fully closed position.

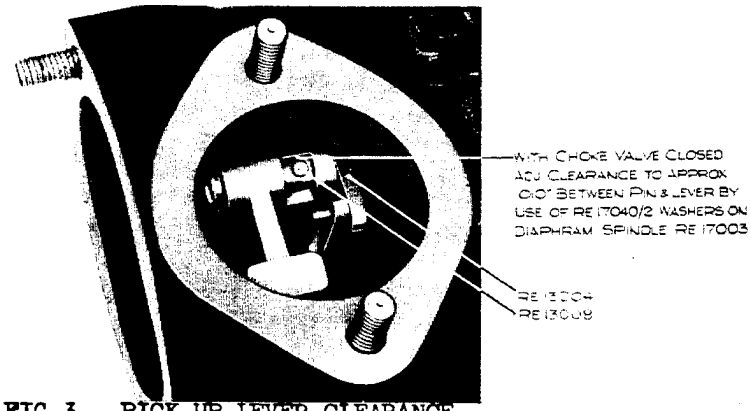

FIG.3. PICK-UP LEVER CLEARANCE.

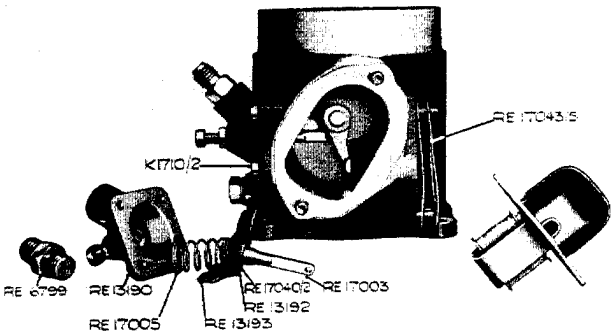

FIG.4. CHOKE VALVE DISMANTLED.

2. Fit RE.17013 screw and lock nut to RE.19020 lever, and with the screw nose resting on the high stop of the fast idle cam, adjust RE.17013 screw to give .030" clearance between the throttle stop screw and the throttle stop lug. See Fig.7.

3. Fit and adjust RE.13211 rod, with the choke valve fully closed to give .031" clearance between the thermostat lever and stop. See Fig. 8.

Fit and adjust RE.13212 rod, choke valve to fast idle pick-up, as shown in Fig.8.

These rods are threaded left- and right-hand to facilitate adjustment and should be started in the threaded ball ends simultaneously.

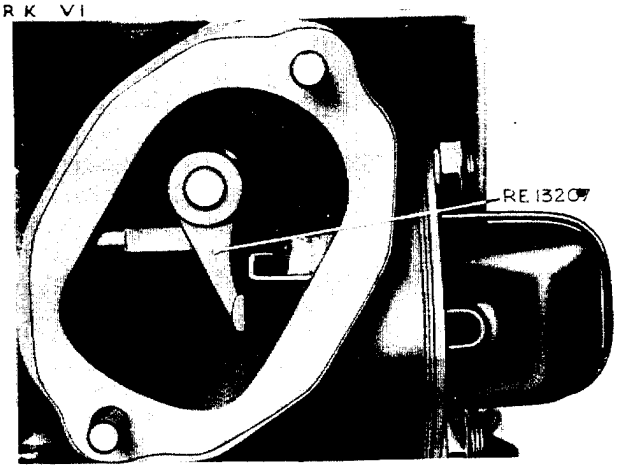

LEVER & MAGNET COIL YOKE FACES MUST BE PARALLEL ONE TO ANOTHER WHEN IN POSITION GAP BETWEEN LEVER & YOKE FACES TO BE ADJUSTED TO ·004/·006" BY USE OF SHIM WASHERS RE 17043/5

FIG.5. ADJUSTMENT OF MAGNETIC CAP.

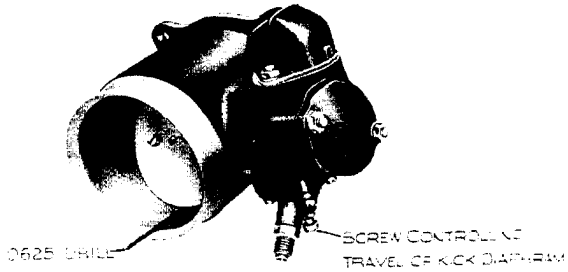

ADJUST KICK DIA DIAPHRAM TRAVEL TO ENABLE ·0625 DRILL TO ENTER AS SHOWN WHEN CHECKING GAP LIGHTLY HOLD CHOKE VALVE CLOSED & PRESS DOWN ON PIVOT END OF RE 17003 LINK

FIG.6. ADJUSTMENT OF KICK GAP.

Final Test Adjustments:

Although there are no external levers, etc., on this type of carburetter by which to operate the jets, the principle of the jet adjustment is the same as on the hand controlled carburetter. A brass screw at the base of the jet assembly moves the jet tube up or down, the screw is exposed after removing the cap nut.

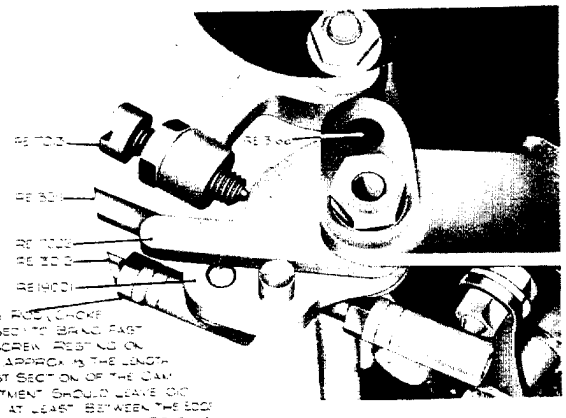

ADJUST THIS ROD (CHOKE VALVE CLOSED) TO BRING FAST IDLE CAM SCREW REST NO ON A POINT AT APPROX ⅓ THE LENGTH OF THE FIRST SECTION OF THE CAM THIS ADJUSTMENT SHOULD LEAVE ·010 CLEARANCE AT LEAST BETWEEN THE EDGE OF THE CAM & THE STOP PIN RE 3 [illegible]

FIG.7. SETTING THROTTLE STOP.

Having finally set the engine idling, (mixture and speed), it will be necessary to re-adjust the fast idle cam screw RE.17013 to obtain the .030" clearance between the throttle stop screw and the lug as previously described. This should be done with a cold engine to ensure consistency of setting, a small variation of .002"/.003" can make a appreciable difference to the starting speed of the engine.

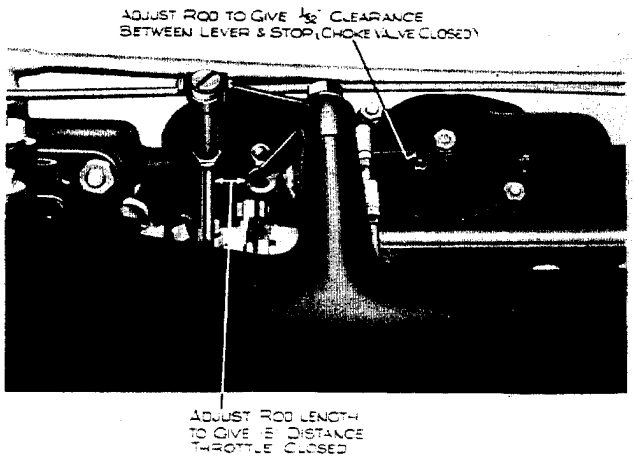

FIG.8. ADJUSTMENT OF THERMOSTAT LEVER.

The adjustment of the fast idle cam pick-up rod RE.13212, does, in a minor way, control the "warming up period" fast idle speeds, as the length of the rod alters the relative positions of the fast idle screw and the fast idle cam.

The dual bi-metal coil unit has been set to a given torque in a constant temperature room (68°F), and in the event of fitting one or two new coils, the torque should be checked and reset as under:-

1. Adjustment of the unit must take place in a constant temperature of 68°F. The unit should be assembled and left to stabilise at that temperature for at least 2 hours.

2. With the lever as shown in Fig. 9, the coils are to be pre-set so that a total weight of 178 - 181 grammes acting at "B" just moves the lever clear of the stop.

   Since the coils are temperature sensitive, they must not be handled whilst adjusting.

3. After setting, mark plate at pointer with centre punch.

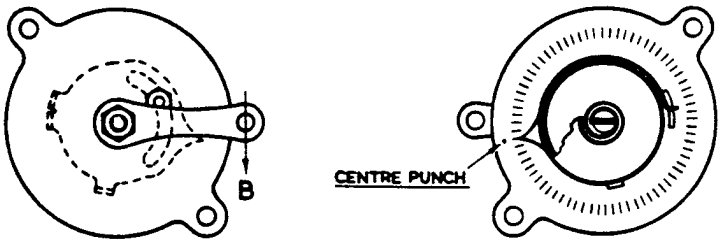

FIG.9. BI-METAL COIL ADJUSTMENT.

FOR INFORMATION:

MODIFICATIONS TO AUTOMATIC TWIN S.U. CARBURETTERS TO IMPROVE COLD STARTING

CATEGORY 3A:

1. SETTING MODIFICATIONS:

On a customer's complaint of poor cold starting, the following modifications and checks should be carried out:-

(i) Replace the bi-metal thermostat with one of an increased loading of 200 - 205 grammes.

(ii) Reset the kick diaphragm travel to .090".

(iii) Check the solenoid air gap as .002" - .006".

TO REPLACE THE BI-METAL THERMOSTAT:

Material Required:

Part No.	Title.	No. Off.
RE.17037Z	Assembly Thermostat.	1.

This thermostat was originally set at a loading of 178 - 181 grammes at 68°F as explained in our Bulletin No. BB-157, but it is now recommended that the loading be increased to 200 - 205 grammes at 68°F. Replacement units set to the new loading will be supplied on application to this Depot. Old units should be returned for credit in the normal way, and no attempt should be made to adjust the bi-metal spring to the new setting.

FITTING INSTRUCTIONS:

(i) Undo the 2 BA nut holding the lower ball jointed end of the link rod from the choke valve to the thermostat lever.

(ii) Undo the two 2 BA nuts retaining the thermostat unit in its housing.

(iii) Refit the new thermostat.

(iv) Check the clearance between thermostat lever and its stop, as shown in Fig. 1.

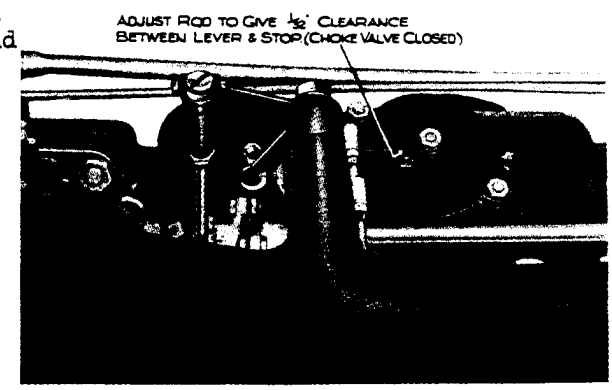

FIG. 1. ADJUSTMENT OF THERMOSTAT LEVER.

TO RE-SET THE KICK DIAPHRAGM TRAVEL:

(i) Undo the two 2 BA nuts retaining the choke valve assembly cover and remove the cover. (See Fig. 2).

(ii) Adjust the travel of the kick diaphragm by means of the adjusting screw and a .090" drill or other suitable gauge placed at the apex of the choke valve as shown in Fig.2. When pressing lightly on the choke valve, and pressing with a thin rod on the pivot end of the link rod to the diaphragm, the drill should be just free to move.

It will be appreciated that the adjusting screw acts as a stop to the diaphragm link rod; the further it is screwed out, the further can the link rod move backwards, thus determining the opening of the butterfly choke valve. It is essential, therefore, that the link rod is against its stop when taking the measurement at the butterfly apex.

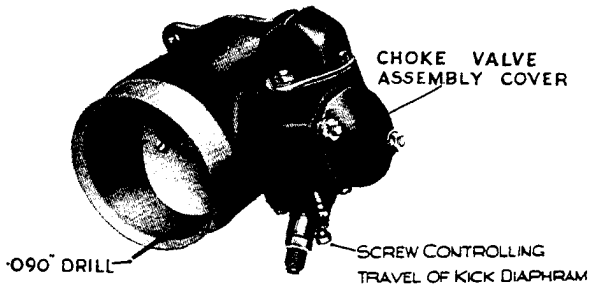

ADJ. KICK DIA. DIAPHRAM TRAVEL TO ENABLE ·090" DRILL TO ENTER AS SHOWN WHEN CHECKING GAP. LIGHTLY HOLD CHOKE VALVE CLOSED & PRESS DOWN ON PIVOT END OF RE 17003 LINK

FIG.2. ADJUSTMENT OF KICK GAP.

TO CHECK THE SOLENOID AIR GAP:

(i) Proceed as in Fig. 3.

(ii) Replace choke valve assembly cover.

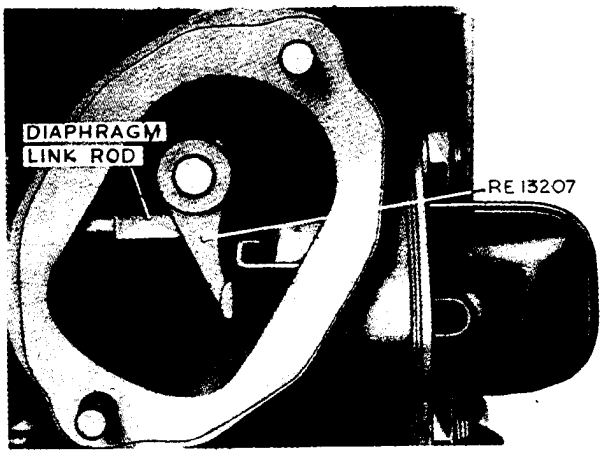

LEVER & MAGNET COIL YOKE FACES MUST BE PARALLEL ONE TO ANOTHER WHEN IN POSITION. GAP BETWEEN LEVER & YOKE FACES TO BE ADJUSTED TO ·002/·006" BY USE OF SHIM WASHERS RE 17043/5

FIG. 3. ADJUSTMENT OF SOLENOID AIR GAP.

2. CHOKE CONTROL OVER-RIDE MECHANISM:

No provision was made on early automatic twin S.U. carburetters for clearing the system should flooding occur when starting from cold. It will be appreciated that the bi-metal spring and electric solenoid would hold the choke valve closed irrespective of the throttle position, and therefore, it would not be possible to turn the engine with choke and throttle open as is normally done on non-automatic systems.

An over-ride has been introduced on production whereby, when the throttle pedal is fully depressed, the choke valve is mechanically opened by trip levers. The alteration consists of fitting a new coupling shaft with a modified fast idle cam lever and a new fast idle cam link as shown in Fig. 4.

According to our records chassis numbers as listed on the attached sheet have not been fitted with an over-ride and should complaints occur of poor cold starting attributable to an initial excess of liquid fuel in the induction system, this modification should be carried out in conjunction with the modifications given above.

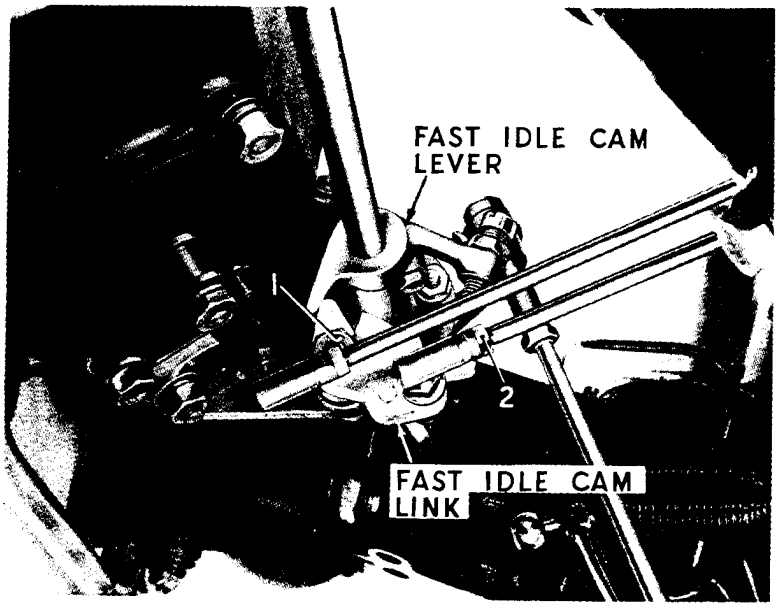

FIG. 4. THE NEW FAST IDLE CAM LEVER AND LINK.

Material Required:

Part No.	Title.	No.Off.
RE.19437	Assembly carburetter coupling shaft and fast idle cam lever.	1.
RE.19966	Assembly link fast idle cam.	1.
K. 8833	Washer- Spacing - Fast idle cam and link.	1.

These parts should be ordered from this Depot as required.

FITTING INSTRUCTIONS:

(i) Remove the air filter for access to the carburetter linkage.

(ii) Remove two 3 BA bolts from each of the couplings, RE.17012/17047, and lift out the coupling shaft, RE.17008 (Fig. 5).

(iii) Loosen the pinch bolts and remove the half couplings from the shaft. Remove the locknut and screw from the fast idle cam lever. Assemble the half couplings on the new shaft, but do not tighten the pinch bolts.

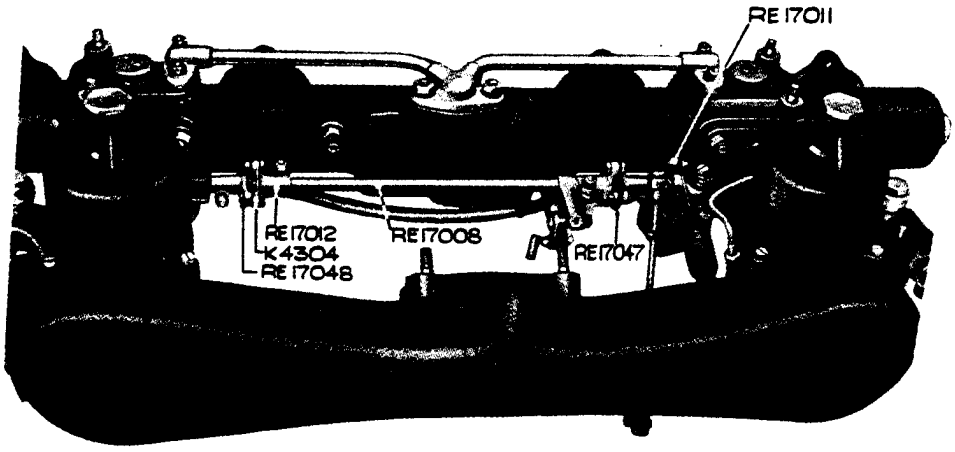

FIG. 5. CARBURETTERS ASSEMBLED.

(iv) Undo the 2 BA nut holding the fast idle cam link on its pivot pin, (1, Fig. 4) and discard the 2 BA washer. It has been found that this washer may cause jamming of the fast idle cam link and fast idle cam and it should not be refitted. The 2 BA retention nut itself provides sufficient abutment for the link and cam. Undo the left-hand threaded 4 BA locknut at the lower end of the operating rod to the choke valve (2, Fig. 4). Remove the cam link and unscrew it (left-handed thread) from the rod.

(v) Screw the new cam link to the rod and assemble it to its pivot pin, fitting the washer K.8833, between it and the fast idle cam so the washer rests in the counter-bore in the fast idle cam link. Secure with the 2 BA retention nut.

(vi) Replace the new coupling shaft and re-assemble the couplings with the 3 BA bolts, nuts and washers.

TO RE-SET THE LINKAGE:

(i) Screw back the throttle stop to allow the throttle to close fully.

(ii) With the front carburetter throttle fully closed, tighten the front coupling pinch bolt to give .098" clearance between the fast idle cam and the cam lever (see Fig. 6). The cam lever adjusting screw hole should be central with the cam face.

(iii) Hold the rear carburetter throttle closed and tighten the rear coupling pinch bolt.

(iv) Adjust the throttle stop screw to open the throttles ½ turn from the fully closed position.

(v) Fit the screw and locknut to the fast idle cam lever and with the screw nose resting on the high stop of the fast idle cam, adjust the screw (RE.17013) to give .030" clearance between the throttle stop and the throttle stop lug. (See Fig. 7).

(vi) Adjust the rod from the fast idle cam link to the choke valve as shown in Fig. 7.

(vii) Warm up the engine and set the idling for mixture and speed.

(viii) With the engine cold, re-set the fast idle cam screw RE.17013 to give .030" clearance between the throttle stop screw and lug as in paragraph (v).

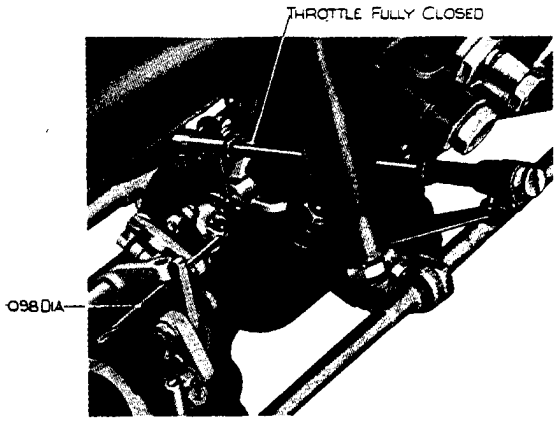

FIG. 6. FAST IDLE CAM AND LEVER ADJUSTMENT.

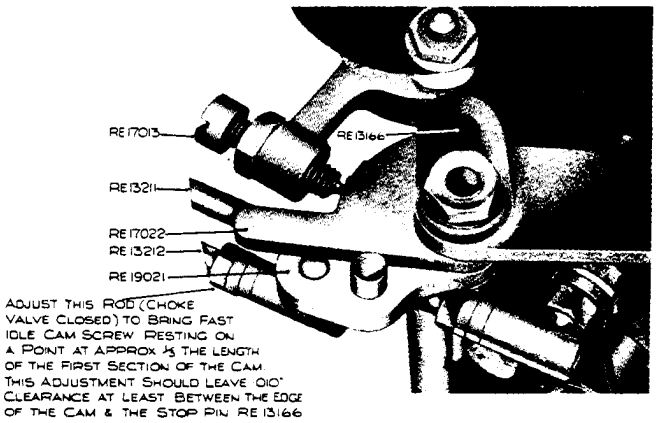

FIG. 7. SETTING THROTTLE STOP.

It is essential that the fast idle cam and link are perfectly free and that no undue scrubbing takes place between the two. The opportunity should be taken to check this free action. No oil or grease should be used on the assembly, but it is permissible lightly to file the outer face of the fast idle cam link to increase clearance.

Similarly, should there be a foul between the new fast idle cam link and the fast idle cam stop, (RE.13166, Fig. 7), the cam stop may be filed on its outer end.

Minimum end clearance for cam and link is .015".

AUTOMATIC S.U. CARBURETTER MODIFICATIONS.

There is no record of the following cars having been fitted with the over-ride choke control, although some may have been modified.

CHASSIS NO.	CHASSIS NO.	CHASSIS NO.	CHASSIS NO.
B 8 LRT	B 10 RT	B 14 RT	B 18 RT
B 20 RT	B 22 RT	B 26 LRT	B 32 RT
B 34 LRT	B 38 RT	B 42 RT	B 44 RT
B 46 LRT	B 48 LRT	B 50 RT	B 52 LRT
B 54 RT	B 56 RT	B 64 RT	B 66 RT
B 70 LRT	B 72 RT	B 74 RT	B 76 RT
B 78 RT	B 80 LRT	B 82 RT	B 84 RT
B 86 RT	B 88 RT	B 90 RT	B 92 RT
B 94 RT	B 96 RT	B 98 LRT	B 100 RT
B 106 RT	B 108 RT	B 110 RT	B 112 RT
B 114 RT	B 116 RT	B 118 RT	B 120 RT
B 1 RS	B 3 RS	B 7 RS	B 9 RS
B 11 RS	B 15 RS	B 17 RS	B 19 RS
B 21 RS	B 23 RS	B 27 RS	B 29 RS
B 31 RS	B 33 RS	B 35 RS	B 37 RS
B 39 RS	B 41 RS	B 43 RS	B 45 RS
B 47 RS	B 49 RS	B 51 RS	B 53 RS
B 55 RS	B 57 RS	B 59 RS	B 61 RS
B 63 RS	B 65 RS	B 67 RS	B 69 RS
B 71 RS	B 73 RS	B 75 RS	B 77 RS
B 81 RS	B 83 RS	B 87 RS	B 89 RS
B 95 LRS	B 97 RS	B 99 RS	B 101 RS
B 103 RS	B 105 RS	B 109 RS	B 113 RS
B 115 RS	B 119 RS		
B 4 SR	B 6 SR	B 8 SR	B 10 SR
B 14 SR	B 16 SR	B 24 SR	B 26 LSR
B 28 SR	B 30 LSR	B 32 LSR	B 34 LSR
B 38 SR	B 44 SR	B 46 SR	B 50 SR
B 54 SR	B 58 SR	B 62 SR	B 64 SR
B 68 SR	B 74 SR	B 80 SR	B 82 SR
B 84 SR	B 90 SR	B 92 SR	B 94 SR
B 96 SR	B 102 SR	B 104 SR	B 130 SR
B 176 SR	B 316 SR	B 320 SR	B 322 SR
B 324 SR	B 326 SR	B 328 SR	B 330 SR
B 332 SR	B 334 SR	B 338 SR	

FOR INFORMATION.

AUTOMATIC TWIN S.U. INDUCTION SYSTEM

DESIGN MODIFICATIONS.

This Bulletin gives advance information of design improvements to the Automatic Twin S.U.Induction System which will shortly be incorporated on production.

1. OIL PRESSURE SOLENOID SWITCH.

In order to ensure more positive starting with a cold engine it has been found necessary to delay the initial opening of the choke valve.

With the present automatic system the choke valve is held in the fully closed position by an electric solenoid wired in parallel with the starter button. As soon as the engine fires the starter button is released and the solenoid releases the choke valve. It has been found that, at this point, the choke valve flies open violently, due to the depression created in the manifold by initial cranking, and continues to oscillate a few times before settling down in the position determined by the kick diaphragm travel. This sudden opening of the choke can be sufficient to stall a cold engine at the first attempt to start.

The difficulty has been overcome by delaying the solenoid circuit break for some 5 to 7 seconds after the engine commences to run by wiring the solenoid in parallel with the ignition circuit and using an oil pressure sensitive switch to break the circuit at a given oil pressure.

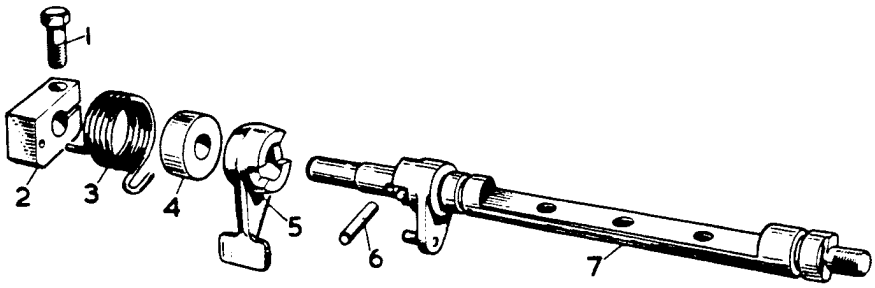

1. Clamping Screw.
2. Spring Tensioner.
3. Spring.
4. Bush.
5. Solenoid Lever.
6. Pin.
7. Choke Valve Spindle Assy.

FIG.1 EXPLODED VIEW OF CHOKE VALVE SPINDLE.

At the same time to prevent over-choking, the solenoid lever has been spring-loaded to the choke valve spindle (Fig.1), thereby allowing the manifold depression to open the choke valve against the spring loading whilst the solenoid is in operation. The pre-loading of the spring is adjusted so that the maximum opening of the choke valve in this way is 5°, experience having shown this to be the maximum opening to ensure a cold engine's running at the first application of the starter.

As soon as the oil pressure reaches 15 lbs/sq.in. the switch breaks the solenoid circuit and the choke valve is pulled open a further 5°by the kick diaphragm operated by manifold depression.

The oil pressure switch is fitted between the pump and the full-flow filter to ensure a quick response and uses the existing plugged outlet in the oil feed adaptor (Fig.2). The solenoid is now a two pole unit and although energised whenever the oil pressure falls below 15 lbs/sq.in. its magnetic strength is only sufficient to close the choke valve when the valve is already within 5°of that position. Fig.3 shows a wiring diagram for the new arrangement.

In order to maintain the choke over-ride system for clearing any initial flooding, the choke valve spindle pin (Fig.1) is allowed 30°of free travel in the solenoid lever. Thus the choke valve can be opened 30°by fully depressing the accelerator pedal even though the magnetic lock of the solenoid is in force.

2. NEW FAST IDLE CAM ARRANGEMENT.

A new fast idle cam link, support bracket and fulcrum pin have been introduced to prevent scrubbing between the cam link and the fast idle cam. The fast idle cam has also been re-designed to give reduced speeds on the intermediate steps and a shorter duration for the whole fast idle stage. (Fig.4).

3. SETTINGS.

The following settings are required where the new system is fitted:

(i) Kick Diaphragm Travel.

The Kick Diaphragm travel should be set to .075" (1.90 mm). The setting is measured with a drill between the choke valve and the choke body as detailed in Bulletin BB-165 dated 29.1.53.

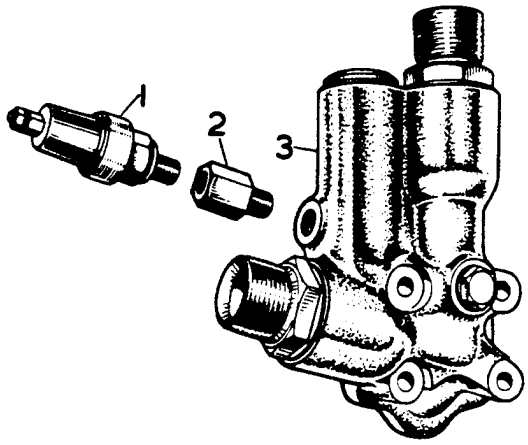

1. Switch. 3. Oil Feed Adaptor.
2. Adaptor.

FIG.2 OIL PRESSURE OPERATED SWITCH AND OIL FEED ADAPTOR

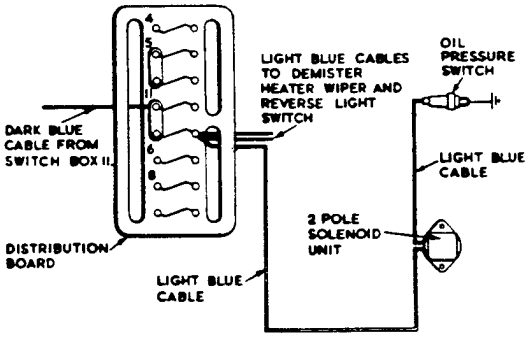

FIG.3 WIRING DIAGRAM.

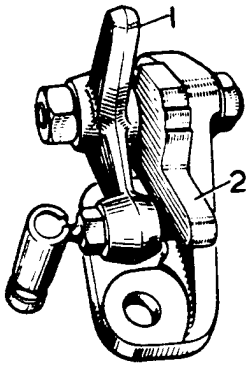

1. Fast Idle Cam Link.
2. Fast Idle Cam.

FIG.4 NEW FAST IDLE CAM AND LINK.

(ii) Solenoid Air Gap.

The solenoid air gap is set to between .0005" and .004" (.012 and .10 mm). It is adjusted by shims under the solenoid flange as detailed in Bulletin BB165 dated 29.1.53.

(iii) Spring Tensioner Setting.

The spring tensioner should be set so that a weight of 235 to 240 grammes acting on an arm of 2" (50.8 mm) length will open the choke valve just sufficiently to allow a .062" (1.51 mm) drill to be inserted between the edge of the valve and the body, (Fig.5).

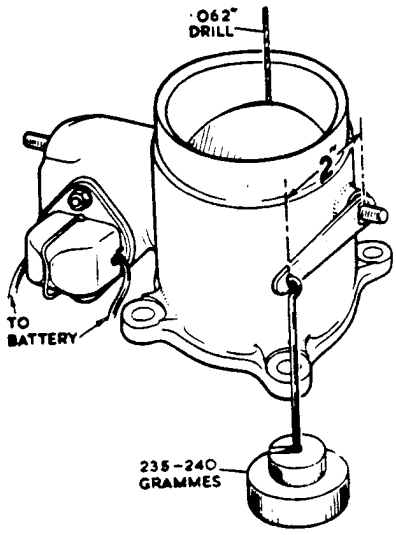

FIG.5 SETTING THE SPRING TENSIONER.

Having set the kick diaphragm travel and solenoid air gap the housing should be mounted in a vice by two ¼" bolts and nuts fitted to the retention flange holes. Connect up a 12 volt battery to energise the solenoid and adjust the spring tensioner on the spindle so that the weight opens the choke valve the required amount.

A single tool combining the lever and weight is being designed by the Service Department.

(iv) Fast Idle Setting.

After setting the mixture and slow running in the usual way the fast idle should be adjusted whilst the engine is still warm. Adjust the fast idle screw on the highest step of the fast idle cam to give .035" (.89 mm) clearance between the throttle stop screw and its stop.

AUTOMATIC TWIN S.U. INDUCTION SYSTEM

DESIGN MODIFICATIONS.

Service Bulletin BB-188 gave advance information of design improvements to the Automatic Twin S.U.Induction System that will shortly be incorporated on production. A further new feature to be introduced at the same time is described below.

4. BI-METALLIC SOLENOID SWITCH.

Additional experience has shown that the positive lock of the choke valve in the closed position, provided by the solenoid unit, is not necessary for starting when the under-bonnet temperature is more than approximately 15°C.

A bi-metallic switch has therefore been introduced into the solenoid circuit between the distribution board and the solenoid unit to break at 15°C. The switch is mounted on the conduit elbow on the right hand side of the dashboard below the fuse box. It re-closes the circuit when the under-bonnet temperature falls to 10°C.

With this switch, the Automatic System ensures a fully closed choke for cold starting but avoids any tendency to over-richness when starting with the engine warm or hot.

FOR INFORMATION

MODIFICATIONS TO THE AUTOMATIC TWIN S.U. INDUCTION SYSTEM

Service Bulletins BB-188 and BB-188A gave advance information of modifications to the Automatic Twin S.U. Induction System that are now being fitted on production. Details for modifying earlier cars to the latest specification are given for information in the following paragraphs. It is not intended that the modifications should be retrospective and Retailers should carry them out only after consultation with the London Service Station to meet complaints of poor cold starting.

Parts Required:

R.5304	Assy. Automatic Choke	1 Off.
RE.21918	Assy.Bkt.Support - Fast Idle Cam	1 Off.
RE.21908	Assy.Link - Fast Idle Cam	1 Off.
RE.21735	Fast Idle Cam	1 Off.
UE.514	Fulcrum Pin	1 Off.
RE.21917	Oil Pressure Switch	1 Off.
RE.21688	Adaptor - Oil Pressure Switch	1 Off.
UD.1819	Bi-Metal Switch	1 Off.
K.2801/Z	Mounting Screws	2 Off.
K.9006/Z	Spring Washers	2 Off.
K.4006/Z	Nuts	2 Off.
16/.012	P.V.C. Cable - Light Blue	2 Feet.
16/.012	P.V.C. Cable - Beige	2 Feet.
RD.3533	Cable Eyes 2 B.A.	2 Off.
RD.3690	Cable Eyes 3 B.A.	1 Off.
RD.3106	Rubber Elbow Sleeving	3 Off.
	Sleeving P.V.C. 5 m/m - Black	3 Feet.

The Automatic Choke Assembly supplied will have the spring tensioner on the spindle, the solenoid air gap and the kick diaphragm travel correctly set.

Procedure:

(i) Remove the air cleaner.

(ii) Undo the 2 BA nut retaining the choke lever on the choke valve spindle and remove the choke lever. Disconnect the feed wire to the choke solenoid. Remove the four nuts and spring washers retaining the bottom flange of the automatic

choke assembly to the air intake duct and remove the choke assembly. Fit the new assembly.

(iii) Undo the 2.B.A. nut securing the fast idle cam and link to the fulcrum pin. Remove the cam and link and unscrew (left hand thread) the ball joint of the cam link from the link rod. Remove the fast idle cam bracket by undoing the two securing nuts. Screw the new cam link assembly to the link rod.

(iv) Fit the new fulcrum pin to the new cam bracket with a 2.B.A. nut and spring washer removed from the old assembly. Fit the bracket to its flange on the induction manifold.

(v) Refit the new fast idle cam and link to the fulcrum pin and fit a 2.B.A. retaining nut. No washer is required. Adjust the thermostat link rod to give 1/32" clearance between the thermostat lever and its stop pin as shown in Fig.1. Adjust the fast idle cam link rod so that with the choke valve closed the fast idle screw rests at a point approximately ⅓ the way along the first step of the cam.

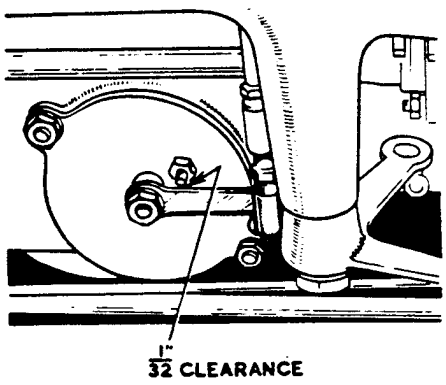

FIG.1.
ADJUSTMENT OF THERMOSTAT LEVER.

It may be found that the fast idle screw does not rest centrally on the fast idle cam steps and that it is necessary to reposition the carburetter coupling shaft and fast idle screw lever. Undo the pinch bolts securing the couplings at each end of the shaft and push the shaft forward so that the fast idle screw is centrally positioned over the fast idle cam. Re-set the shaft as follows:-

(a) Screw back the throttle stop screw to allow the throttles to close fully. Remove the fast idle screw and locknut from its lever.

(b) With the front carburetter throttle fully closed, tighten the front coupling pinch bolt to give .098" (2.5 m/m) clearance between the fast idle lever and the cam (Fig.2.). The adjusting screw hole in the lever should be central with the cam face.

(c) Hold the rear carburetter throttle closed and tighten the rear coupling pinch bolt.

(d) Adjust the throttle stop screw to open the throttles 1/2 turn from the fully closed position.

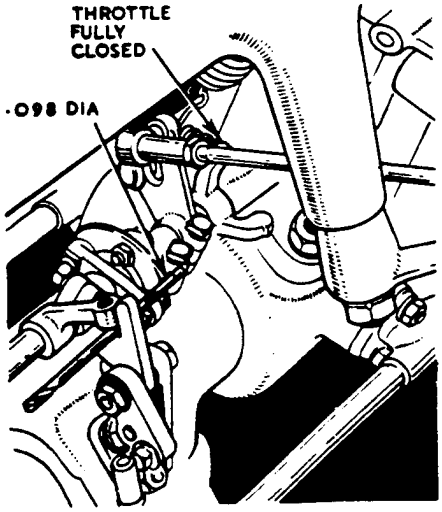

FIG.2.
RE-SETTING THE COUPLING SHAFT.

(e) Fit the adjusting screw and locknut to the fast idle lever and with the screw nose resting on the high step of the cam, adjust the screw to give .035" (.9 m/m) clearance between the throttle stop screw and its lug.

(vi) Remove the conduit elbow from the dashboard underneath the distribution board and drill the two holes as shown in (Fig.3). Drill and cut out the slot as shown. Fit the bi-metallic switch on the outside of the conduit elbow.

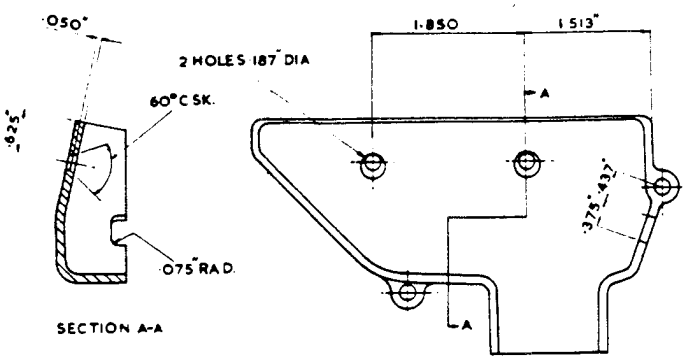

FIG.3.
DRILLINGS AND SLOT IN CONDUIT ELBOW.

(vii) Remove the blanking plug and fit the oil pressure switch and adaptor to the oil feed adaptor as shown in (Fig.4). If the feed to the oil pressure gauge is taken from this upper connection, remove the flexible pipe and refit to the central forward connection which will have a blanking plug.

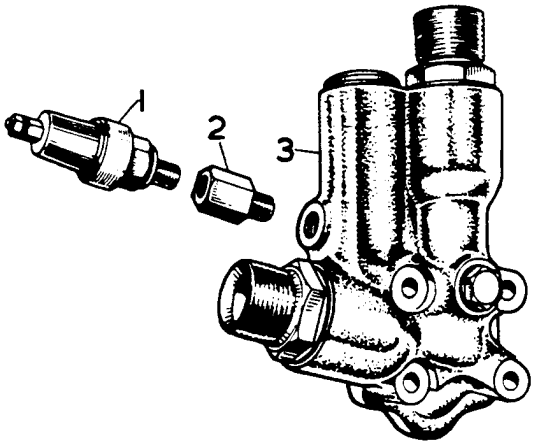

1. Switch. 3. Oil Feed Adaptor.
2. Adaptor.

FIG.4.
OIL PRESSURE OPERATED SWITCH AND OIL FEED ADAPTOR.

(viii) Remove the existing beige feed wire to the solenoid from the triangular shaped 12 way junction box on the dash. The wire leaves the junction box and passes down the dash in the main loom under the conduit, leaving the main loom at the valance to lead to the solenoid switch. Pull the wire down to the top of the conduit and arrange it to pass out through the slot in the conduit elbow to the left hand connection on the bi-metal switch. Cut the cable to length. Run a cable from the distribution board out through the slot in the elbow to the right hand terminal (Fig.5.) Cover exposed cable with P.V.C. sleeve. Refix the conduit elbow to the dash and connect the cables to the switch with 2.B.A. cable eyes and rubber elbow sleeves.(It will be noted

that the feed is now taken from the main ignition circuit and not from the auxiliary circuit as shown in the wiring diagram in Bulletin BB-188.)

(xiv) Connect the solenoid to the oil pressure switch with light blue cable in 5 m/m sleeving. A 3.B.A. cable eye and rubber elbow sleeve should be fitted at the oil pressure switch connection. Refit the beige cable to the solenoid.

(x) After tuning the carburetters in the normal way the fast idle should be set whilst the engine is still warm. Adjust the fast idle screw on the highest step of the cam to give .035" (.89 m/m) clearance between the throttle stop screw and its stop.

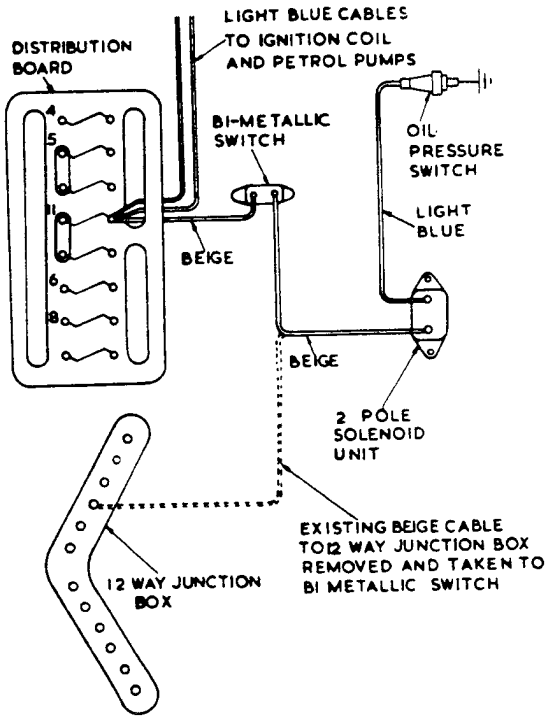

FIG. 5.
WIRING DIAGRAM.

The replaced Automatic Choke Assembly should be returned to the London Service Station.

FOR INFORMATION:

AUTOMATIC TWIN S.U. INDUCTION SYSTEM.

CHOKE SOLENOID (ELECTRO MAGNET)

There are two types of solenoidsas below:-

a) A single pole type, RD-6501, fitted to earlier chassis having the automatic choke control.

b) A double pole type, RD-8574, as at present fitted in conjunction with the oil pressure switch incorporated in the solenoid circuit.

When the existing stock of the single pole solenoids (RD-6501) are used up and where it is necessary to renew a single pole type, a converted double pole type (Fig.3) will be supplied. Referring to Fig.3, it will be noted that the unit has been modified by removing one end of the electro magnetic winding (C) from its terminal (B) and earthing it by soldering to the base plate.

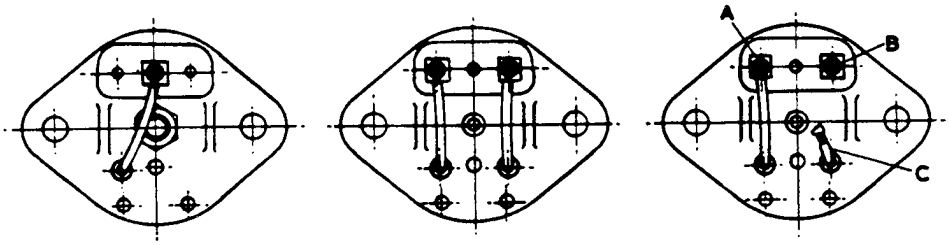

FIG 1 FIG 2 FIG 3

Fig.1. shows a rear view of the single pole type.
Fig.2. " " " " " " double pole type.
Fig.3. " " " " " " (double pole type converted (to the single pole type.

The existing beige coloured cable from the 12-way junction box should be connected to the terminal A (Fig.3) when fitting a modified solenoid to the engine.

On chassis already fitted with a double pole unit, an RD-8574 unmodified type will of course be required when renewal is necessary.

OVERFLOW PIPE - FRONT CARBURETTER

BENTLEY MARK VI - A TO M SERIES INCLUSIVE.

The overflow pipe for the float chamber of the S.U. carburetter has a banjo connection which is retained by the centre bolt passing through the float chamber cover. On Bentley Mark VI Models, from A to M Series inclusive, it is essential that the overflow pipe for the front carburetter is positioned to run down the outside of the float chamber. The lower end of the pipe should be bent outwards away from the dynamo brush gear.

It is known that some models in these series have the overflow pipe positioned to run down the inner, engine side of the float chamber, allowing excess petrol to drip onto the rear end of the dynamo if flooding occurs.

Retailers are asked to check cars during service and to re-position the pipe where necessary.

FOR INFORMATION.

PETROL GAUGE FLOAT UNITS
BENTLEY 'R' TYPE.

Some confusion has arisen in ordering replacement petrol gauge float units for the Bentley 'R' Type as Coachbuilders, with the exception of Messrs Hooper Ltd., have continued to use the earlier Mark VI flat type tank on the 'R' Type chassis. All 'R' Type standard Steel Saloons and coachbuilt models by Messrs Hooper Ltd., have an 'L' shaped tank. The two tanks are shown in the illustration.

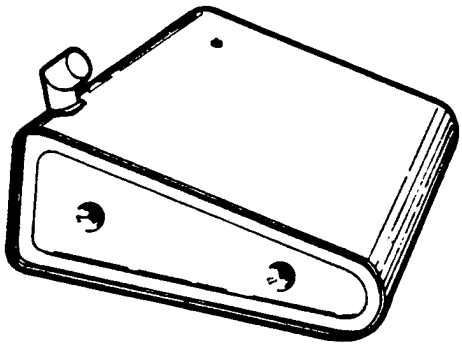

MK.VI TYPE TANK

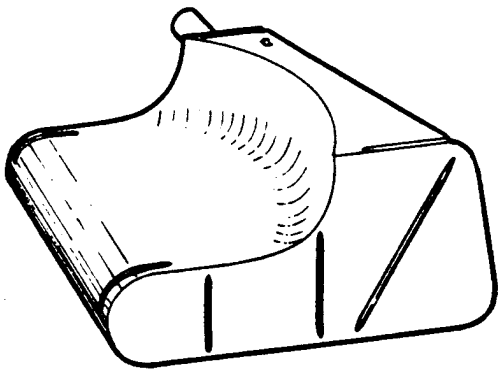

'R' TYPE TANK

Retailers are asked particularly to check which tank is fitted before ordering replacement float units. Part numbers of the units are as follows :

RF.5410 Gauge, electric - for Mark VI Flat Tank

RF.9227 Gauge, electric - for 'R' Type 'L' shaped Tank.

FOR INFORMATION:

UNIVERSAL AUTOMATIC TRANSMISSION.

T.V. Control Settings for L.H. and R.H. Bentley.

Refer to either Fig.I (for R.H. cars) or Fig.II (for L.H. cars).

1. Set the hot idle to 350-375 r.p.m. in "4" range.

2. Disconnect rods A and B.

3. With the carburetter in the hot idle position (fast idle cam out of action), adjust rod C until lever D is positioned to the gauge.

DIAGRAMATIC LAYOUT OF T.V. CONTROL LINKAGES
R.H. BENTLEY, DAWN AND WRAITH.

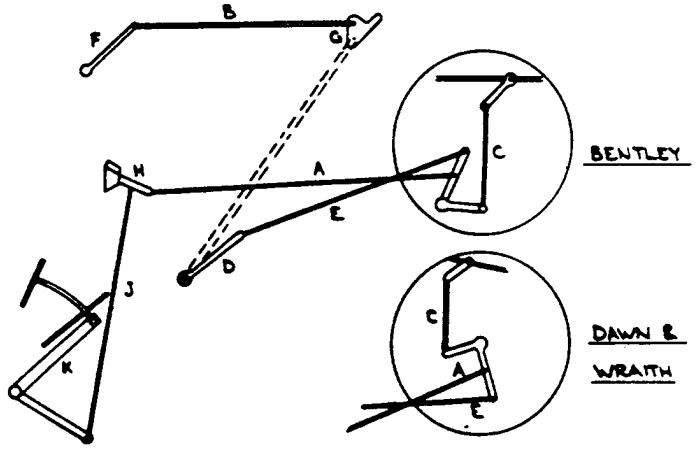

FIG.I.

DIAGRAMATIC LAYOUT OF T.V. CONTROL LINKAGES
L.H. BENTLEY, DAWN AND WRAITH.

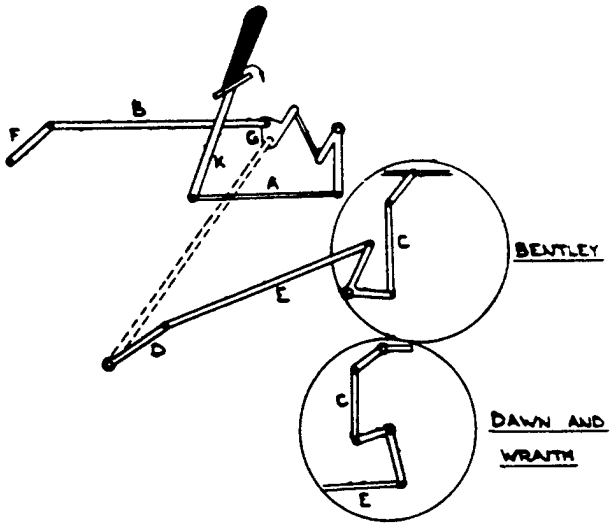

FIG.II.

(i) Gauge Setting Instructions R.H. cars - refer to Fig.III.

A suitable gauge (ZX.757) is required. This locates on the distance piece behind the lever D and on the face (Q, Fig.III) of the flywheel front casing which projects below the bottom of the crankcase.

Adjust rod C until the extended end of rod E just rests on or is up to 1/16" above the top edge of the gauge (edge P, Fig.III).

(ii) Gauge Setting Instructions L.H. cars - refer to Fig.IV.

A suitable gauge (ZX.636) is required. This locates on the distance piece behind the lever D and on the top of the starter motor 'S'.

Adjust rod C as above.

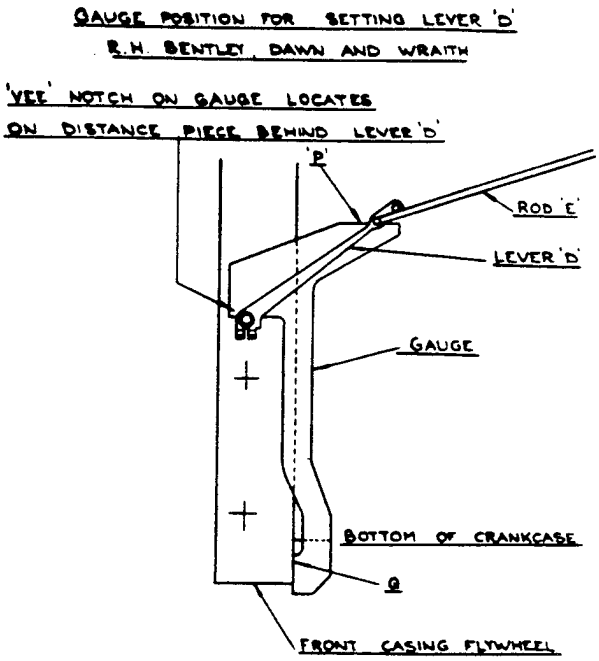

FIG. III.

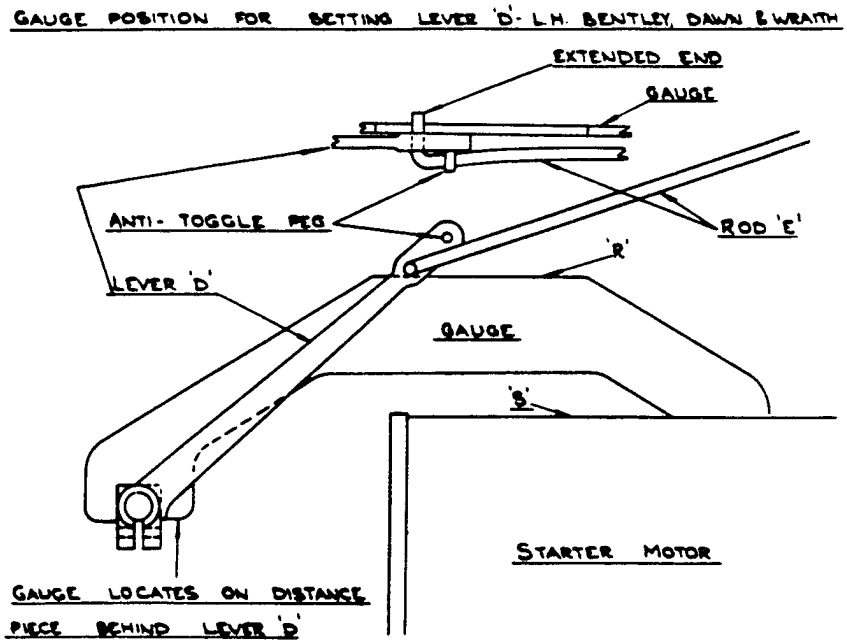

FIG. IV.

4. Hold lever F in the forward direction to the limit of its travel.

5. Adjust rod B until it will just slip into the hole in lever G; (if two holes are present in lever G, the hole nearest the front of the car should be used).

6. For R.H. and L.H. Bentley, make rod B 4 turns longer.

7. Adjust the pedal. NB. On no account should rod C be used for pedal adjustment.

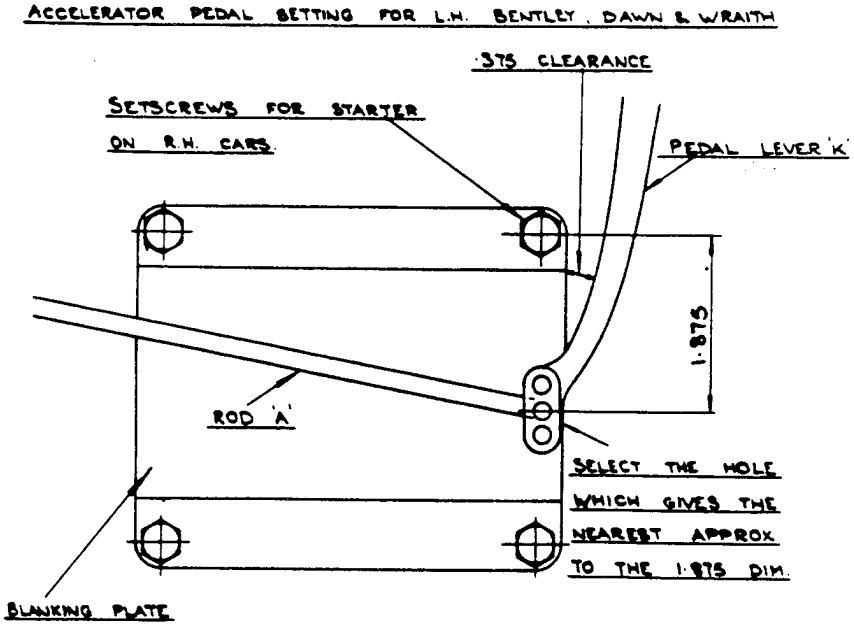

FIG. V.

R.H. Cars

(i) Adjust rod A until lever H makes an angle of 75-80° with the face of the dash (lever to lie below the horizontal).

(ii) Adjust rod J so that in the full throttle position the rubber stops on the pedal stem just clear the toe board.

Setting Instructions for Manual Gear Controls
(including Micro Switches) on all RH Cars.

1. Disconnect the control rod which connects the lever on the cross shaft to the lever on the control tube.

2. Set the gearbox in neutral (i.e., lever on the gearbox in the extreme forward position).

3. Adjust the length of the control rod which connects the gearbox lever to the lever on the cross shaft until the lever on the cross shaft on the R.H. side of the car projects .500" (approx.) below the level of the frame.

4. With the quadrant and gearbox lever in neutral, adjust the length of the control rod (connecting the lever on cross shaft to that on the control tube) until the 2 BA bolt at the lower end will just pass through the jaw and rubber bush. (Ensure that the distance piece in the rubber bush does not drop out while the rod is disconnected).

5. Check the quadrant in all positions. The correct position for each gear can be felt by the detent in the gearbox. The linkage is set correctly if in the "4" position the lever rests just clear of the "neutral stop". Similarly in the "3" position the lever should rest just clear of the "gate stop".

   Any fine adjustments that may be required to obtain these latter conditions should be made on the rod from the control tube to the cross shaft.

6. Set the micro switches.

   The switches are adjusted by means of slotted holes in the mounting bracket.

   If the micro switch button is pressed, a certain amount of free movement will be noticed before the switch operates. This free movement should be taken up when setting to the following instructions.

   (i) Starter Switch (nearer the engine).

   a) Set the quadrant in position "3".

   b) Adjust the position of the switch until the clearance between the operating peg and the switch button is .156" (approx.).

   (ii) Reversing Light Switch.

   a) Set the quadrant in position "2".

   b) Adjust the position of the switch until the clearance between the operating peg and the reverse switch button is .125 (approx).

Setting Instructions for Manual Gear Controls (including micro switches) on all LH Cars.

1. Disconnect the vertical control rod which connects the lever on the control tube to the intermediate plate lever.

2. Set the gearbox in neutral (i.e., lever on the gearbox in the extreme forward position).

3. Adjust the length of the horizontal control rod which connects the gearbox lever to the intermediate plate lever to 17¾" from ball centre to pin centre.

4. With the quadrant and gearbox lever in neutral, adjust the length of the vertical control rod until it is the required length.

5. Check the quadrant in all positions. The correct position for each gear can be felt by the detent in the gearbox. The linkage is set correctly if in the "4" position the lever rests just clear of the "neutral stop". Similarly in the "3" position the lever should rest just clear of the "gate stop".

   Any fine adjustments that may be required to obtain these latter conditions should be made on the vertical rod.

6. Set the micro switches.

   The lower of the two is the starter switch, the upper one the reversing light switch.

   The switch mechanism is adjustable at two points:

   (i) by a slotted hole enabling the pivot point of the rocking lever to be moved nearer to or away from the switches.

   (ii) by a slotted hole which enables the operating fork to be set at different angles relative to the operating tube.

   If the micro switch button is pressed, a certain amount of free movement will be noticed before the switch operates. This free movement should be taken up when setting to the following instructions:

   a) Set the quadrant in position 2.

   b) Pivot the rocking lever until the free movement is taken up in the reversing light switch.

   c) Adjust the position of the rocking lever pivot until the clearance between the lever and the starter switch button is .075" (approx.).

   d) With the rocking lever still in the above position, adjust the position of the operating fork until the clearance between the operating tab on the engine side of the rocking lever, and the rocking lever is .125" (approx.).

FOR INFORMATION

PETROL PUMPS.

Due to the use of high-alcohol content fuels, causing the diaphragm of the petrol pump to swell and the consequent loss of armature travel, it has been found necessary to revise the "Setting Instructions" given in the Workshop Manual.

These instructions state that when setting the diaphragm,

> "Unscrew the diaphragm one sixth of a turn (one flange hole) at a time until a point is reached when on pressing the centre of the diaphragm the outer rocker will toggle-over. Unscrew the diaphragm a further two thirds of a turn (four holes) to obtain the correct setting."

The above should be revised to read :-

> "Unscrew the diaphragm one sixth of a turn (one flange hole) at a time until a point is reached when on pressing the centre of the diaphragm the outer rocker will toggle-over. Unscrew the diaphragm a further full turn (six holes) to obtain the correct setting.

CAR HEATER SYSTEM.

A modification has been introduced to the car heater system to obviate the possibility of damage to the heater matrix due to excessive water pressure.

Under certain conditions, the rate of flow from the cylinder head is greater than that which will pass through the matrix and gives rise to high local pressure. A restrictor disc fitted into the feed pipe controls the flow to a safe figure.

The attached drawing shows the position of the disc and the method of fixing.

This modification has been embodied during assembly on all cars with the exception of a small number in regard to which the Retailers affected will be notified.

No general retrospective action is therefore necessary.

Restrictor Disc is: Part No: RE.5767.

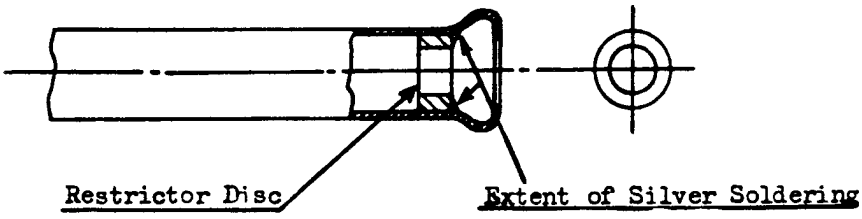

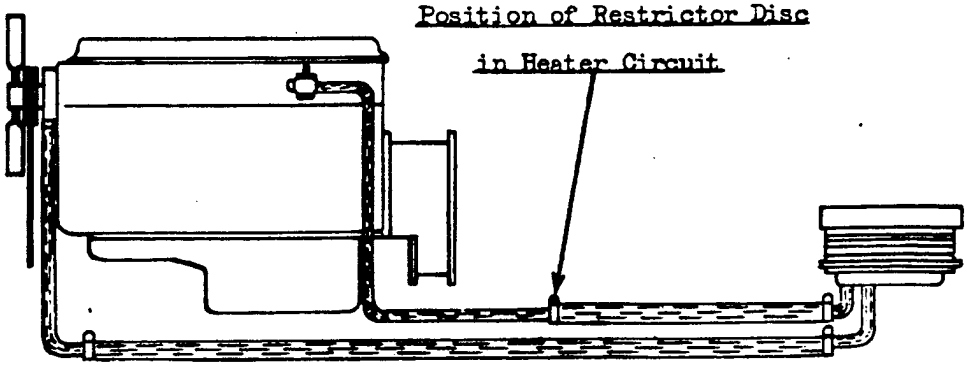

RADIATOR STEAM VALVE.

The coolant system is at present pressurised to approximately 4 lbs per sq.in. pressure by means of a steam valve situated on the radiator header tank where the steam escape pipe is attached to the radiator. It has been decided in future to operate the coolant system at atmospheric pressure and the ball and spring inside the steam valve housing are to be removed forthwith on all cars in service.

The valve is readily accessible by unscrewing the hexagon plug on top of the header tank at the point of attachment of the steam pipe. When the ball and spring have been removed, a spot of white paint should be applied to the steam pipe close up to the steam valve chamber to denote that the alteration has been carried out.

Will all Retailers please take action to carry out this alteration on all cars in their territory at the first opportunity.

Will Retailers and Service Depots please notify the London Service Depot of the chassis numbers whenever this alteration is carried out. If any cars are not available in their respective territory, special arrangements will be made to deal with the matter if the London Service Depot is advised.

FOR INFORMATION:

FITTING OF ADDITIONAL INTERIOR CAR HEATER.
(Incorporating Improved Demisting & Defrosting)

GENERAL:

Retailers are advised that an additional interior car heater is now available for fitting to Bentley Mk.VI Standard Saloons in service as a chargeable improvement in cases where the output of the existing underseat heater is considered insufficient to meet conditions of extreme cold.

This additional heater is fitted to the centre of the dash behind the facia panel, and part of its hot air output is directed into both of the demisting ducts for defrosting and demisting purposes, thus making the use of the existing electrically operated heater unit in the right-hand duct unnecessary.

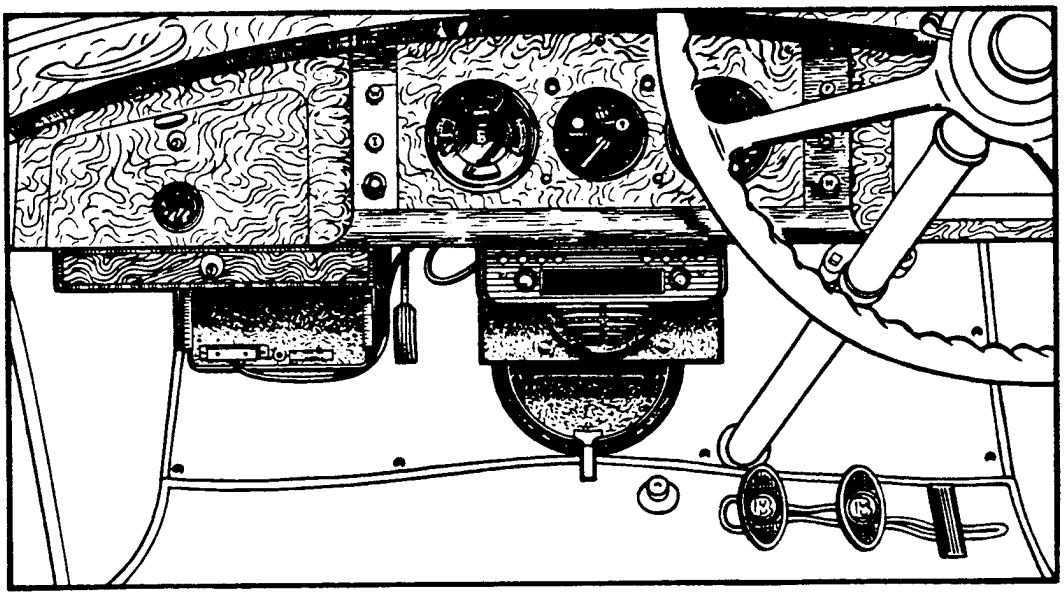

FIG. 1. FINISHED VIEW OF HEATER IN POSITION.

A separate rheostat switch is included for the control of this additional heater, while a foot operated trap door is incorporated in the heater cover for the purpose of cutting off the direct hot air flow into the car interior when demisting only is required.

The above illustration shows the position of the heater when installed in a car.

All the necessary fitting instructions, including the essential drilling and wiring diagrams, are given in this leaflet. The cost of the components necessary for this installation may be obtained from the London Service Station.

PROCEDURE FOR FITTING THE ADDITIONAL HEATER.

General Description of Installation:

The operation of the additional heater is identical to that of the existing underseat heater, and the water circulation is effected in series with this as shown in Fig.2, i.e., from the cylinder head to the additional heater, thence to the underseat heater, and from there, returning to the engine.

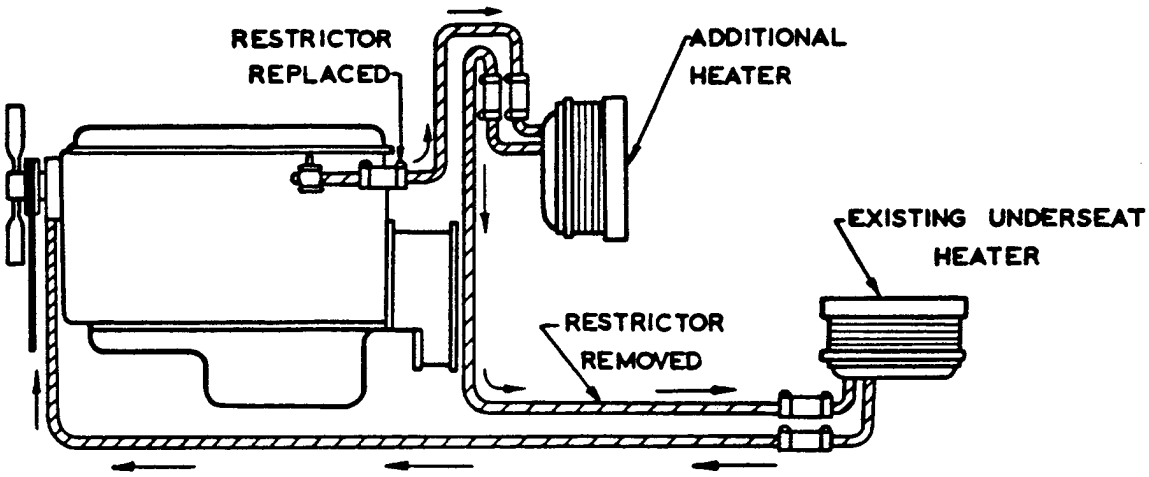

FIG. 2. GENERAL LAYOUT OF WATER CIRCULATION.

The dash heater embodies a hot air take-off which is connected to the existing air silencers to supply heater air to the demisting vents. As shown in the illustration on Page 1, a horizontally hinged door is fitted to the heater cover, its purpose being to cut off the supply of direct heat into the interior of the car when demisting only is required.

With this additional heater installed, the demister motor, blower and electrically operated heating element in the right-hand air duct are no longer required, and these components and their wiring must be removed.

The Demister Switch (M) is also removed, and a separate rheostat control switch for the dash heater fitted in its place. The existing Defroster Switch (F) is disconnected and left in position for future use.

In order to fit the dash heater behind the radio, it will be necessary to remove the power pack fitted to the back of the receiver, re-positioning this behind the tool tray as seen in illustration on Page 1. In addition, the radio mounting tray will have to be modified to allow full clearance for the demister adaptor at the top of the heater cover.

When installing the additional dash heater, it is recommended that the following sequence of fitting operations are adhered to:-

(a) Removal of the radio receiver, demister motor and blower, electrical heater element and wiring.

(b) Positioning and fitting of power pack bracket and heater.

(c) Detaching power pack from receiver and fitting to bracket.

(d) Installation of the water connections.

(e) Fitting of additional rheostat switch, and wiring up to heater.

(f) Modification to the radio mounting tray and completion of installation

Each of the above mentioned operations is fully detailed hereunder:-

A. REMOVE RADIO RECEIVER, REDUNDANT UNITS AND WIRING:

1. Disconnect the radio aerial lead, power feed and bonding tape, if fitted.

2. Remove the radio retaining screws and lift out the receiver.

3. Unscrew the knurled threaded ring which positions the speedomater trip control through the radio mounting tray, remove the six radio mounting tray retaining screws, and take down the tray.

4. Disconnect and remove both air silencers from the demister blower branch pipe. Remove the three holding bolts, and take down the demister motor and blower assembly. Disconnect the wiring from switch and switchbox earth, also disconnect the demister switch feed wire.

5. Disconnect wiring from defroster switch, and remove defroster heater element and wiring from right-hand air duct.

B. POSITION AND FIT POWER PACK BRACKET AND DASH HEATER:

1. Remove the carpet from dash.

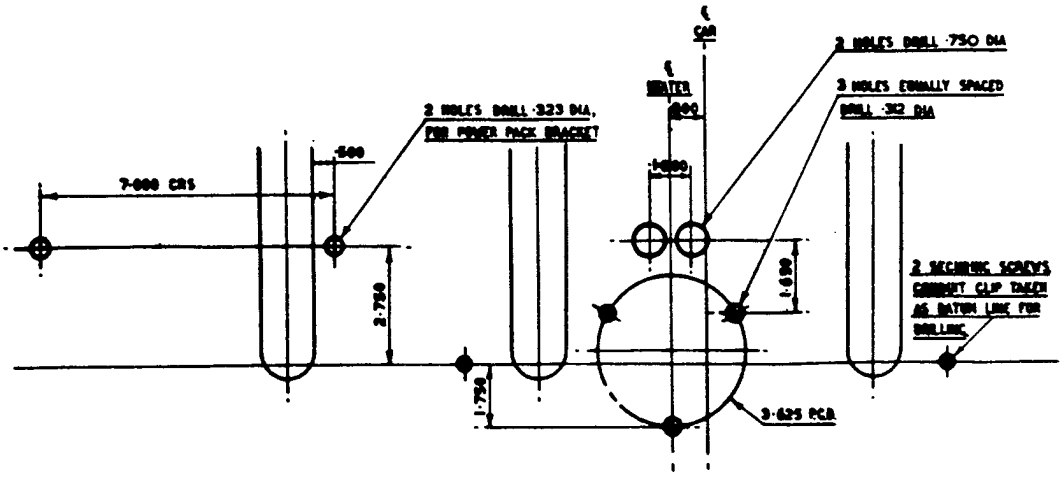

FIG. 3. DRILLING OF DASH FROM INTERIOR OF CAR.

2. Pull back the felt or Sepak insulation sufficiently to bare the metal dash for marking off and drilling as shown in Fig. 3.
NOTE: Due to the fact that this installation will be carried out with the engine in situ, all marking off and drilling of the dash will require to be made from the interior of the car.

3. Refit the insulating material and drill this to correspond with the holes drilled in the dash.

4. Enlarge the holes drilled in the insulating material to 0.500" dia. to allow sufficient clearance for the heater fixing stud shoulders.

5. Mark out and cut a circular recess 4.25" dia. x 0.300" deep in the top face of the insulating material, taking care to see that the three holes already drilled for the fixing screws are all within this diameter.

6. Refit the carpet and cut this to correspond with the recess and holes in the insulation.

7. Fit the heater as follows:-

   a) Remove the heater cover.

   b) Holding the heater matrix and back plate together, insert the two bent pipes into the two 0.750" dia. holes, coincide the three integral fixing studs at the back of the base plate with their appropriate holes drilled in the insulation and dash, and press the heater in position. Secure by tightening the nuts on the engine side of dash.

   c) Fit the rubber grommets round the bent pipes in the dash and then refit the heater cover, ensuring that the foot control for the trap door is at bottom dead centre.

8. Fit the "Y" shaped demister adaptor to the top half of the heater.

9. Fit the power pack bracket to the dash, using the two countersunk-headed setscrews provided. After tightening the nuts on the engine side of the dash, cut off all excess threaded portion of the screws projecting beyond the nuts.
NOTE: One arm of this bracket will be found to have a 0.3125" dia. hole drilled through to accommodate the connecting lead clip. When fitting the bracket, this arm should be towards the centre of the car.

C. DETACH POWER PACK FROM BACK OF RECEIVER AND FIT TO BRACKET:

1. Remove the four setscrews securing the power unit cover, and lift off the cover.

2. Remove the three setscrews securing the power unit to the back of the receiver and remove the power unit. A thin bladed screwdriver may be used for this, but great care should be exercised during this operation.

3. Replace the power unit cover.

4. Slide the power unit into the bracket with the female plug pointing both downwards and towards the centre of the car, and secure the unit in position by means of the two shouldered retaining bolts. These bolts should be passed through the bottom bolt holes in the two arms, i.e. the holes nearest to the back plate of the bracket and the rubber grommets fitted to centralise the bolts in the holes.

5. Fit the appropriate connecting lead plug into the left-hand bottom corner of the power unit, (See Fig. 1), and secure this in position by means of the two metal thread setscrews provided through the plug flanges. Prior to fitting this plug however, care should be taken to ensure a good earth connection by cleaning the plug flanges and front face of the power unit in the immediate vicinity of the screw holes.

D. FITTING OF WATER CONNECTIONS:

1. Install the water connections as shown in Fig. 4.

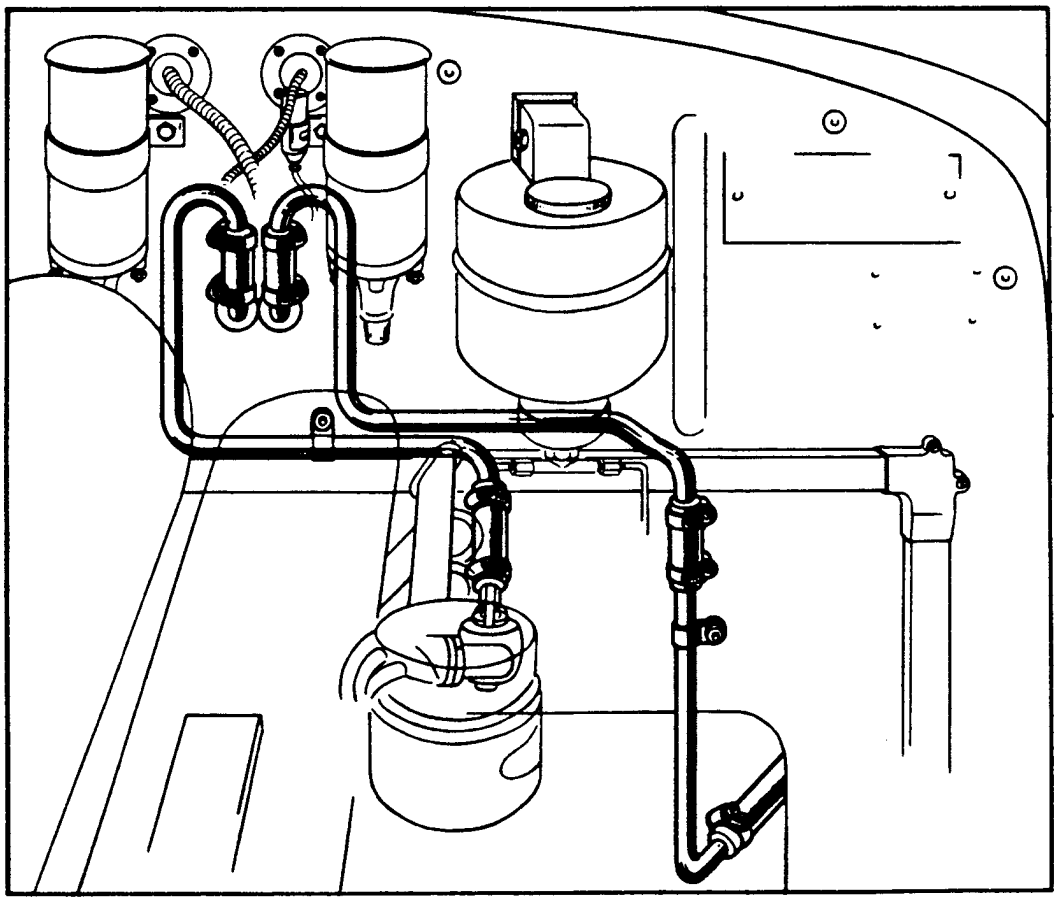

FIG. 4. INSTALLATION OF THE WATER CONNECTIONS.

The existing pipe between the cylinder head isolating tap and under-seat heater should be removed, and the short angled pipe for the right-hand dash heater connection substituted in its place. The original union nut on the

isolating tap should be used again, while the retaining clip for the angled pipe should be fitted to either of the two upper heater fixing studs to suit the run of the piping.

On certain Bentley chassis, the spare ignition coil is carried below the metal cable conduit on the left-hand side of the dash and this may be found to interfere with the "down-run" of the piping between the dash heater and the underseat heater. In cases such as these, this spare coil may be moved 1.00" further to the left in order to allow sufficient clearance for the pipe. The retaining clip for the pipe should be mounted on the existing fixing stud of the ignition coil above the engine.

Where both the ignition coils are mounted on the dash side by side above the engine, the existing toe-board setscrew nearest to the "down-run" of the underseat heater feed pipe should be removed and replaced by the longer screw provided, and the threaded portion of this longer screw projecting beyond the hank rivet on the engine side of the dash should be used for mounting the retaining clip.

E. FIT RHEOSTAT SWITCH TO INSTRUMENT PANEL AND WIRE TO HEATER:

1. Remove the instrument panel facia board.

2. Remove the demister switch (M) from the instrument panel, and enlarge the existing hole in the panel to accommodate the rheostat switch. Fit the rheostat switch.

3. Enlarge the original demister switch hole in the facia board to suit the shank of the rheostat switch.

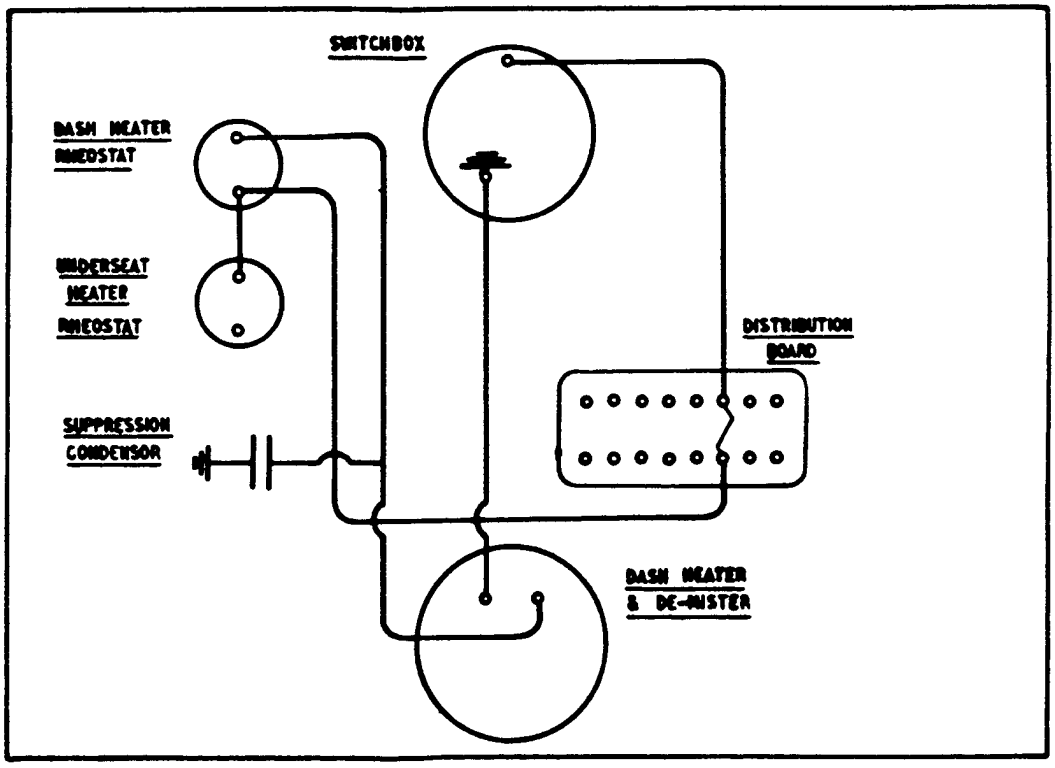

4. Run the earth lead from the dash heater motor under the carpet and connect up to the switchbox earth connection as shown in Fig. 5.

5. Connect the Suppression Condensor supplied to the dash heater feed wire, and then secure the condensor to the demister motor mounting bracket by means of the cheese-headed setscrew supplied.

6. Connect the dash heater and original demister switch feed wires to the rheostat switch.

7. Refit the instrument panel facia board.

F. MODIFICATION OF THE RADIO MOUNTING TRAY & COMPLETION OF INSTALLATION:

1. Reconnect the air silencers to the demisting air vent tubes and connect their free ends to the "Y" shaped adaptor on the dash heater by means of the two wire wound flexible tubes supplied. When fitting these, ensure that the longer tube is fitted to the right-hand side of the adaptor.

2. Cut away the rear of the mounting tray as shown in Fig. 6, and weld on a stiffening rib similar to that already on the rear of the tray.

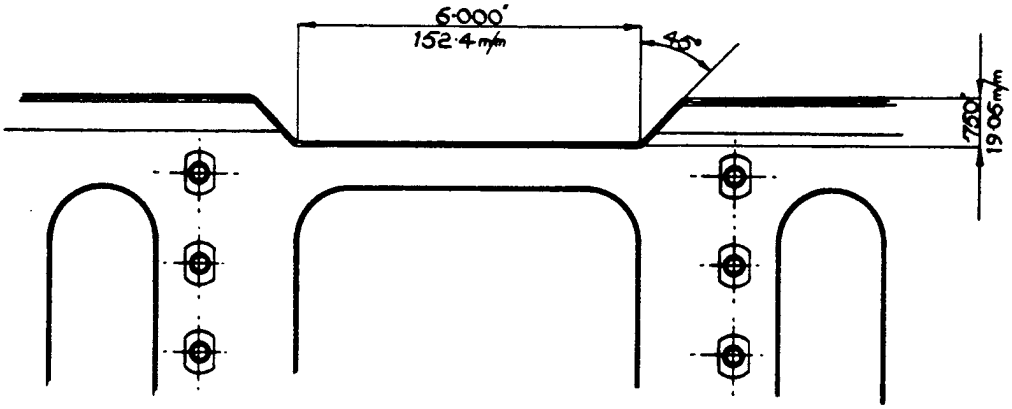

FIG. 6. MODIFICATION TO RADIO MOUNTING TRAY.

3. Refit the radio mounting tray, ensuring that the plastic wiring conduit is under the right-hand flexible tube.

4. Fit the power unit lead plug into the back of the receiver and refit the receiver on its mounting tray. Should there be insufficient clearance between the heater cover and the receiver, the receiver may be mounted 0.250" FORWARD on its mounting tray by drilling additional 5/16" dia. holes in the flange of the tray to suit the fixing studs when in this alternative position.

5. Clip the power unit lead to the right-hand arm of power unit mounting bracket and arrange this to present a neat appearance.

LIST OF MATERIAL REQUIRED.

R.4071	Split Bracket Assy. c/w Setscrews etc. - Power Unit.	1 Off.
R.4088A	Pipe Assy. - Cylinder Head Isolating Tap to Hose Conn.	1 "
R.4089	Pipe - Underseat Heater Feed.	1 "
R.4090	Pipe - Dash Heater Feed.	1 "
R.4091	Pipe - Dash Heater Outlet.	1 "
R.4092	Hose Connection - 2.750" long - Water Pipes.	3 "
R.4093	Hose Connection - 4.500" long - Water Pipe-Cylinder Head Tap.	1 "
R.4115	Flexible Hose Conn. - 4.00" long - R.H. Air Silencer.	1 "
R.4116	Flexible Hose Conn. - 2.50" long - L.H. Air Silencer.	1 "
R.4118A	Dash Heater Assy.	1 "
R.4129	"Y" Piece Adaptor - Dash Heater.	1 "
R.4132	Clip, Retaining - Dash Heater Feed Pipe.	1 "
RE.4750	Jubilee Clips - Size 0.	8 "
RE.6231	Clip, Retaining - Dash Heater Outlet Pipe.	1 "
RD.3434	Power Lead Clip.	1 "
RD.3441	Rheostat Switch.	1 "
R.4073	Power Lead.	1 "
RD.4226	Suppression Condensor.	1 "
R.4141	Countersunk - Headed Bolts - Split Bracket Assy.	2 "
R.4142	Nuts - For Above.	2 "
K.9009	Spring Washers - For Above.	2 "
CS.30200	Screw - For Securing Suppression Condensor	1 "
K.2019	Setscrew - For Replacing Toeboard Setscrew	1 "
K.4008	Nut - For Above.	1 "
K.9008	Spring Washer - For K.2019 & CS.30200.	2 "

When an additional dash heater is installed in an existing Bentley Standard Saloon, the following standard fittings become redundant, and should be discarded:-

Blower & Motor - Demister
Breeches Piece - Demister Blower.
Connection - Rubber Hose - Demister Air Silencers.
Mounting Plate - Demister Blower.
Distance Piece - Demister Blower.
Heater Element.
Push/Pull Switch - Demister.
Pipe Connection - Cylinder Head Tap to Underseat Heater.

FOR INFORMATION

RECOMMENDED ALTERNATIVE WATER PUMP BEARING ASSEMBLIES.

The following information is given as a means of guidance to Retailers should it become necessary to overhaul an existing Bentley water pump in service.

Originally all water pumps incorporated either a Fischer SFM or New Departure bearing assembly in production. The former assembly, however, proved unsuitable in service, and is now obsolete, having been superseded by the current improved Fischer D2 type assembly. The New Departure, on the other hand, has proved satisfactory, and is still listed as a recommended alternative replacement. A third alternative is the Hoffman bearing assembly which was introduced in order to augment supplies.

Although in many cases the original type Fischer SFM assembly has been replaced in service, it is believed that there are still a number of water pumps operating with this bearing assembly. Retailers are advised, therefore, that in the event of a water pump being dismantled for an overhaul, to examine the existing bearing assembly, and if found to be a Fischer SFM type, to replace it by one of the recommended current alternatives mentioned above.

As an aid to recognition each bearing assembly is illustrated below, the individual characteristics being stressed in each case.

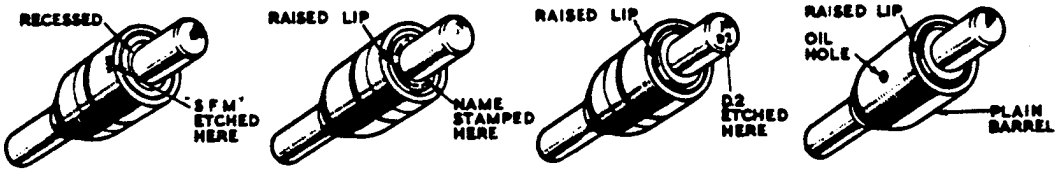

1 FISCHER S.F.M. BEARING 2. NEW DEPARTURE BEARING 3. FISCHER D2 BEARING 4. HOFFMAN BEARING

In addition it is recommended that Retailers also make a check of their existing stocks of replacement water pump bearing assemblies, and if found to hold any Fischer SFM type assemblies, to return these to the London Service Station, where they will be exchanged free of charge.

FOR INFORMATION

RECOMMENDED ALTERNATIVE WATER PUMP BEARING ASSEMBLIES.

The following information is given as a means of guidance to Retailers should it become necessary to overhaul an existing Bentley water pump in service.

Originally all water pumps incorporated either a Fischer SFM or New Departure bearing assembly in production. The former assembly, however, proved unsuitable in service, and is now obsolete, having been superseded by the current improved Fischer D2 type assembly. The New Departure, on the other hand, has proved satisfactory and is still listed as a recommended alternativ replacement. A third alternative is the Hoffman bea ing as. e bly which was introduced in order to augmen' supplies.

Althoug in many cases the original type Fischer SFM assembly has been replaced in service, it is believed that there are still a number of water pumps operating with this bearing assembly. Retailers are advised, therefore, that in the event of a water pump being dismantled for an overhaul, to examine the existing bearing assembly, and if found to be a Fischer SFM type, o replace it by one of the recommended current alternat'ves mentioned above.

As an aid to recognition ea'h bearing assembly illustrated below, the individual characterist'cs being stressed in each case.

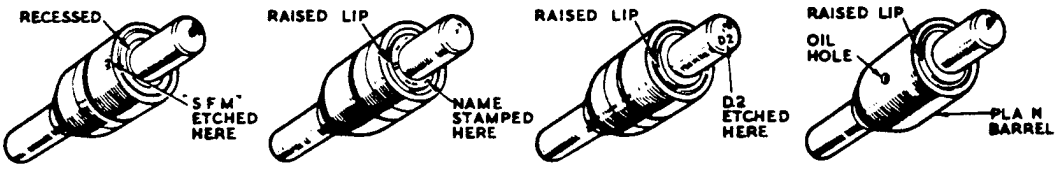

1 FISCHER SFM. BEARING 2 NEW DEPARTURE BEARING 3. FISCHER D2 BEARING 4. HOFFMAN BEARING

In addition it is recommended that Retailers also make a check of their existing stocks of replacement water pump bearing assemblies, and if found to hold any Fischer SFM type assemblies, to return these to the London Service Station, where they will be exchanged free of charge.

FOR INFORMATION.

IMPROVED DEMISTING SYSTEM.

(SUPERSEDES PREVIOUS SERVICE BULLETIN BB-79)

Retailers are advised that the improved type demister system fitted in production to current models is now offered as a chargeable improvement for incorporation on earlier Bentley MK.VI cars in service should owners desire it.

As a result of further investigation and development this new system is capable of keeping the windscreen clear under much more severe conditions than was possible on earlier cars, and it has been adapted so that it may be fitted in place of either the original electrically heated under scuttle system or the later radiator heated type shown in Figs. 1 & 2.

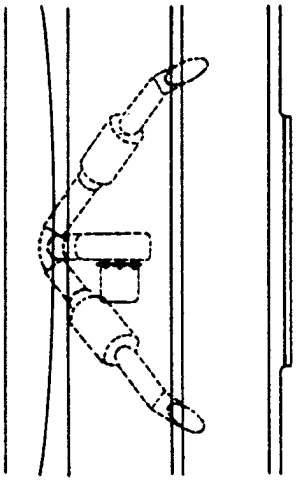

FIG.1. ORIGINAL SYSTEM.

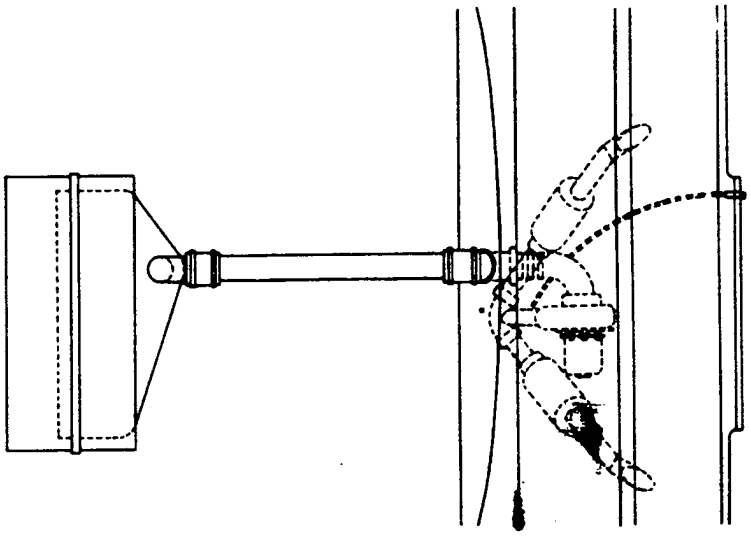

FIG.2. RADIATOR HEATED SYSTEM (INTERMEDIATE TYPE).

The improved type demister system is shown in Fig.3, and it will be seen that it is, in general appearance and operation, similar to existing types.

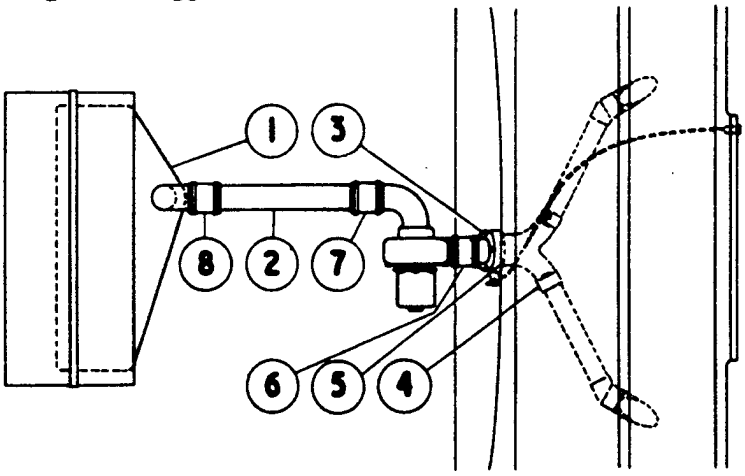

FIG. 3. IMPROVED TYPE DEMISTER SYSTEM.

It is emphasized that no demisting aparatus will operate efficiently unless both outlet ducts at the windscreen are free from obstruction, and it is, therefore, of primary importance that these are tested, and if necessary, corrected in the manner detailed later in this leaflet during assembly. It is also of equal importance that neither the run nor the shape of the conduits and tubing are altered in any way, but are kept as close as possible to the illustrations given herein.

A list of material required is appended, and the time for the installation will be approximately 16 man hours.

FITTING PROCEDURE.

A. NOTE: These instructions refer ONLY to cars fitted with the original electrically heated under scuttle air intake system (See Fig.1).

1) Fit the metal air duct (1, Fig.3) below the radiator header tank as shown, securing this to the rear flange of the tank by means of the two clips and then tightening the hinged strap round both the tank and the duct. (N.B. To fit the strap, first remove the hinge pin, pass one of the disconnected ends of the strap over the top of the tank and under the overflow pipe, and then refit the pin and tighten up).

2) Disconnect the radio aerial lead, power feed and bonding tape (if fitted) and then remove the radio holding setscrews and take down the radio. Unscrew the threaded ring which positions the speedometer trip control, remove the six holding setscrews, and take down the radio mounting tray.

3) Remove the wooden facia centre panel:-

a) Remove the three countersunk screws along the top of the panel.

b) Remove all the push/pull switch knobs by turning these to the left. (The rheostat switch knob is secured with a grub screw).

c) Remove the two countersunk screws along the lower edge of the panel. On earlier models these are removed in the normal manner, but on later cars they should first be turned to the right to release the panel retaining clips at the back. (The screws which should be turned to the right to release are countersunk about one inch into the woodwork, while the alternative type are considerably shallower).

4) Disconnect the demister motor wiring, air silencers and flexible duct connections under the scuttle, and then remove the motor.

5) Remove the four setscrews retaining the metal speedometer grommet retaining ring on the engine side of the dash, disconnect the cable from the instrument and then withdraw the cable, rubber grommet and metal ring into the engine compartment. Drill out the existing Hank rivets round the original cable aperture, enlarge this to 1.875" dia., and then drill four equally spaced holes 0.201" dia. round the hole as shown in Fig. 4.

6) Refit the speedometer cable through the dash by marking off and drilling a hole 1.00" dia. at a point 4.600" directly below the centre of the left-hand aperture carrying the thermometer capillary tube as shown in Fig. 4.

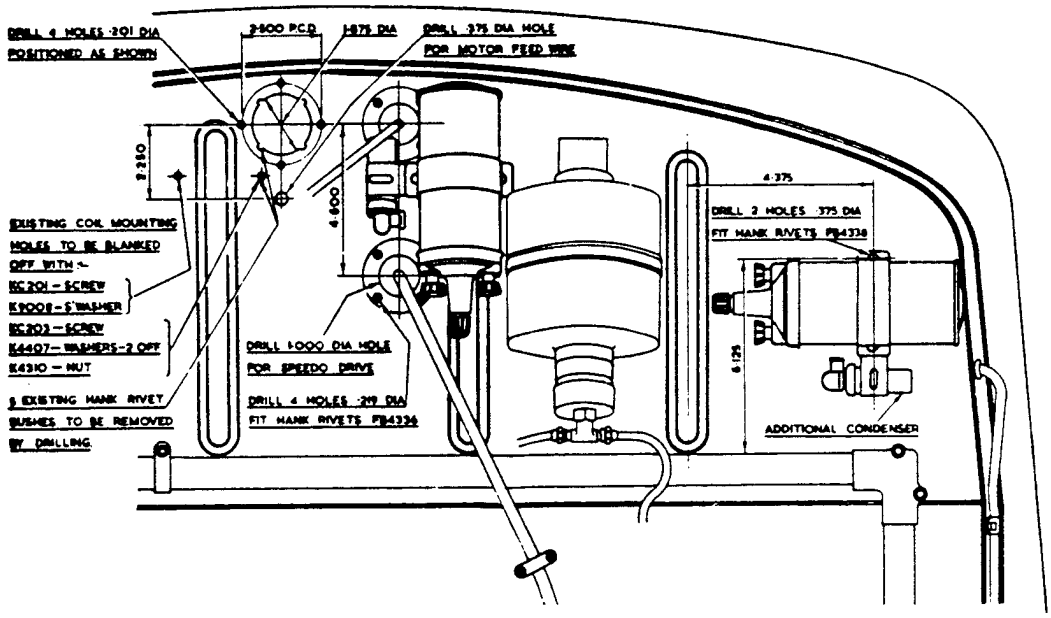

FIG. 4. INSTRUCTIONS FOR DRILLING DASH.

With the existing metal ring offered up over the hole, mark off the relative positions for the four retaining setscrews, and then drill the dash accordingly to accommodate the Hank rivets supplied. Fit these from the driver's side. Pass the cable through the aperture and connect up to the instrument, position the rubber grommet in the hole and fit the metal ring, securing this with the original four setscrews.

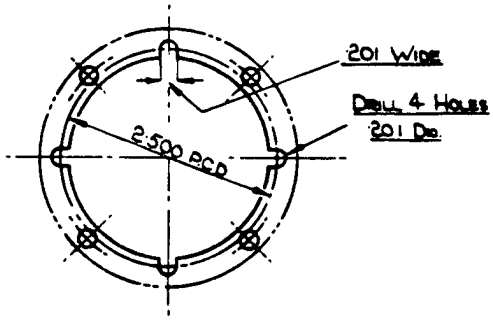

FIG. 5.

NOTE: A number of chassis between B-2-DA and B-191-DZ inclusive have the speedometer cable repositioned and an air duct aperture in the dash already cut and blanked off in production.

In such cases it will only be necessary to remove the blanking plate, and then drill the four 0.201" dia. holes for the demister motor support tube retaining bolts as shown in Fig. 5.

7) On chassis where both ignition coils are mounted side by side on the dash above the engine, the right-hand coil should be removed and then refitted on the left-hand side below the Chassis Name Plate as shown in Fig. 4, using the two Hank rivets provided. Fit the additional radio suppressor below the coil as shown, and connect the wire to the INPUT (or lower) terminal. Drill out the original left-hand coil bracket Hank rivet bush, and then drill another hole in the position shown for the demister motor feed wire grommet.

8) Fit the demister motor support tube (3) breeches piece (4) and throttle barrel (5) as shown in Fig. 6, using the four 2 B.A. bolts and washers supplied.

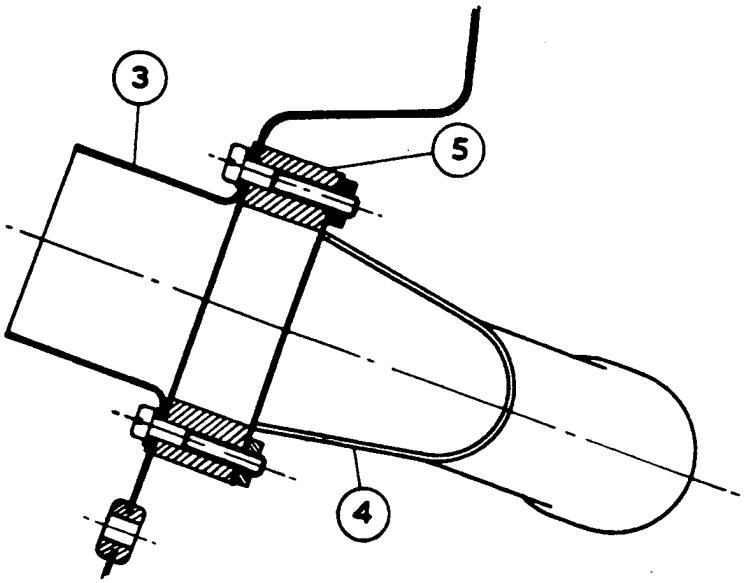

FIG. 6. FITTING OF SUPPORT TUBE, BREECHES PIECE AND THROTTLE BARREL.

9) Remove the existing Defroster Switch (F) from the metal instrument panel and fit the threaded end of the stop valve control inner cable into the knob of the switch. Fit the corresponding end of the outer cable into the existing switch aperture in the panel, and then mark off and cut the cable to fit into the cable clip on the throttle barrel. Care should be taken to ensure that a full sweep of cable has been allowed for easy operation of the control, and also that the cable has been cut flush with the inside of the clip. Fit the cable into the clip and tighten up the retaining grub screw. After greasing, fit the inner cable into its outer casing, and thread the lower end through the cable eye on the swivel bolt on the control arm. Push the control knob INWARDS to within 0.125" of the "fully home" position, shut the stop valve fully, and then tighten up the grub screw on the cable eye. Cut off all but about half an inch of the surplus inner cable beyond the swivel bolt, and then work the control to ascertain whether the requisite amount of travel between the fully open and fully closed positions for the stop valve has been allowed. The

control should operate smoothly and freely, and all necessary adjustments to the cable run and/or clip position should be carried out to obtain this condition.

10) Refit the wooden facia panel, and recheck the control knob position. With the stop valve fully closed this knob should correspond with the existing Demister Switch (M) when this is in its "OF" position. Adjust the inner cable, if necessary, to give this requirement.

11) Connect the breeches piece to the right and left-hand demister ducts under the scuttle, using the wire wound rubber tubing provided.

12) Remove the electrical heating element from the right-hand demister duct below the windscreen, disconnect both wires and withdraw these completely. Remove the existing blanking plate from the left-hand duct, and fit the two modified type cover plates provided. The oblong lock plate with the bolt attached should be first passed through the duct aperture with its length parallel to the facia board, and then turned at right-angles. The cover plate can then be fitted and secured with the lock nut as shown in Fig. 7.

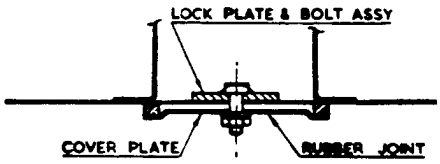

FIG. 7. MODIFIED DUCT COVERS.

13) Fit the demister motor to the support tube as shown in Fig. 3, using rubber hose connection (6) and two jubilee clips provided. The outlet aperture of the demister motor MUST be placed as close as possible to the support tube, but sufficient clearance should be allowed to precent contact due to oscillation. Pass the demister feed wire through the grommet hole in the dash and connect up to the demister switch on the facia panel.

14) Blank off the two holes originally used for the right-hand coil bracket using the set bolts and washers provided.

15) Connect the demister motor intake to the radiator heated air duct using the aluminium tube, rubber hose connections and jubilee clips provided.

16) Replace and refit all other parts which have either been removed or disconnected.

TEST PROCEDURE:

As previously stated on Page 2 of this leaflet the system will not operate satisfactorily if the outlet ducts at the windscreen are obstructed.

This can only be checked by creating synthetic misting conditions

such as the projection of steam on to the screen from an electric kettle. All the windows of the car should be closed, and the exterior of the windscreen glass kept as cool as possible by air blast, sprinkler hose or by placing the car in a cool draught. Warm the car up to normal running temperature, and, as soon as the screen is completely misted over, remove the source of supply, operate the demister, and observe the result.

Should the ducts be free from obstruction the screen will clear fairly rapidly above them, with the exception of a narrow "V" in line with the windscreen wiper spindles, which will be removed more slowly, but which should finally almost completely disappear. On the other hand, if there is any obstruction in the duct, there will be a broad permanent "V" either in the centre of the screen or in some other where this obstruction lies.

As a means of illustrating this point incorrect and correct demisting patterns are shown in Fig. 8.

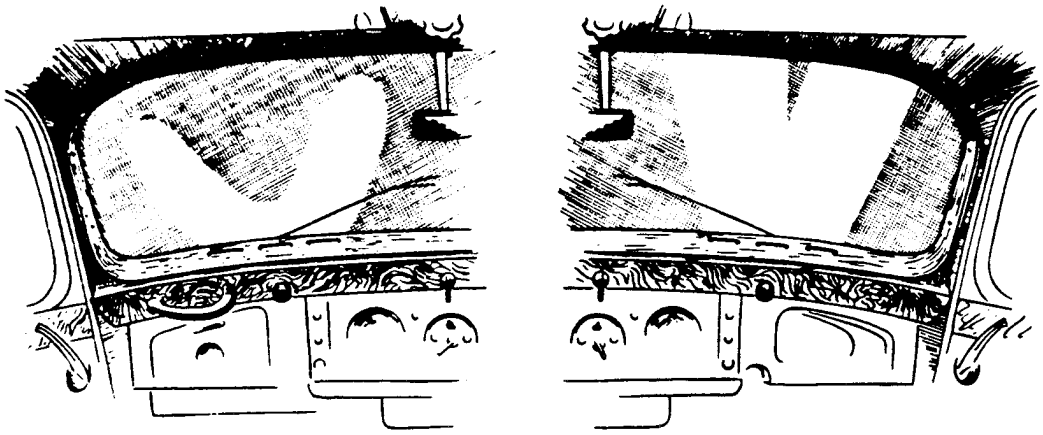

UNSATISFACTORY PATTERN SATISFACTORY PATTERN

FIG. 8. DEMISTING PATTERNS ON SCREEN.

PROCEDURE FOR CORRECTING OUTLET DUCTS:

The outlet duct at the windscreen consists of two separate plates welded together at the edges and resembles an exhaust fishtail. The windscreen wiper spindle passes through a ferrule in the duct.

On earlier cars a strengthening plate was fitted in the vicinity of the ferrule, and if the clearance between the front and rear duct plates is too small, the ferrule and this plate will form a considerable obstruction in the centre of the duct. Should the air flow pattern prove unsatisfactory, examination of the duct may show that either this condition exists or possibly that the oulet aperture is too close elsewhere (the mean recommended width for the aperture is 3/16").

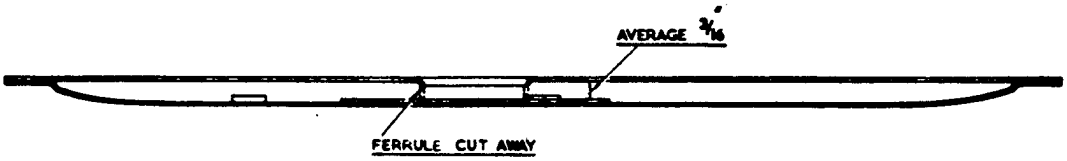

FIG. 9. RECTIFICATION OF OUTLET DUCT.

In such cases the windscreen wiper gearbox should be removed, and the ferrule sawn through the centre and the duct opened out to give an unobstructed air flow as shown in Fig. 9. It should be noted, however, that if the ferrule is cut as shown, there is a possibility of air leaking past the windscreen wiper spindle. A sealing pad may, therefore, have to be fitted between the windscreen wiper gearbox and the back of the duct.

B. FITTING PROCEDURE:

NOTE: These instructions refer ONLY to cars fitted with the intermediate type of radiator heated demister system shown in Fig. 2.

1) Remove the existing radiator heated air duct from below the header tank and fit the replacement supplied. Remove and then discard the existing aluminium tube.

2) Remove the radio set and mounting tray as described.

3) Remove the existing demister motor complete with its adaptor, and then remove the rubber grommet from the adaptor aperture in the dash.

4) Drill hole in dash for demister motor feed wire grommet as shown in Fig. 4. Fit the additional radio suppressor to the spare ignition coil as shown.

5) Fit the demister motor support tube, breeches piece and throttle barrel as shown in Fig. 6. (N.B. It will be necessary to drill the four 0.201" dia. holes round the duct aperture as shown in Fig. 5.) If the car is fitted with hinged flaps over the windscreen outlet ducts, the throttle barrel should not be fitted, and shorter bolts should be used to connect the support tube directly to the breeches piece with the dash in between.
NOTE: The fitting of these hinged flaps to completed cars in service is not practicable, due to the extensive alterations necessary to the windscreen fillet and the possibility of this cracking during the fitting operations.

When the throttle barrel is fitted the existing stop valve control should be cut as necessary to the required length, fitted and then adjusted to provide smooth operation and full travel.

The remainder of the installation is covered by the fitting instructions Nos.11 - 16 inclusive given on Pages 4 & 5 of this bulletin.

NOTE: The material supplied will include a radiator heated air duct and a demister motor. Although both these components may already exist on the car, credit will be allowed when these items are returned to the London Service Station.

PART NO.		DESCRIPTION.	NO. REQD.
R-4929		Air Intake Radiator Duct Assy.	1 Off.
R-4925		Demister Motor Assy. - Modified.	1 "
R-4396	(c)	Throttle Mechanism Assy.	1 "
R-4433	(e)	Locking Plate & Bolt Assy. - Heater Element Apertures	2 "
R-4432	(e)	Blanking Plate - Heater Element Apertures.	2 "
R-4305	(e)	Rubber Gasket - " " "	2 "
K-4304/Z	(e)	Nut - " " "	2 "
K-9005/Z	(e)	Spring Washer - " " "	2 "
RD-4575	(d)	Breeches Piece.	1 "
RD-5938	(RH)	Conduit Pipe - Air Intake Duct to Demister Motor.	1 "
RD-5939	(LH)	" " " " " " "	1 "
RD-6071		Hose - Conduit to Demister Motor.	2 "
RD-5941		Support Tube - Demister Motor.	1 "
RD-5942		Hose - Blower Motor to Support Tube	1 "
R -4385		Hose - Breeches Piece to Windscreen Ducts.	2 "
K-1910/Z	(d)	Setscrew - Breeches Piece & Support Tube to Dash.	4 "
R -4430		Grommet - Wires through Dash.	1 "
RD-4994		No.2 Jubilee Clip.	2 "
330/2868		No.3 " "	4 "
FB-4338		Hank Rivet Bush - Coil Fixing.	2 "
FB-4336		" " " - Ring Retaining-Speedo Cable Grommet.	4 "
KC-201/Z		Setscrew - Blanking Existing R.H.Coil Hole in Dash.	1 "
K-9008/Z		Spring Washer - For above.	1 "

PART NO.		DESCRIPTION.	NO. REQD.
KC-203/Z		Setscrew - Blanking Existing L.H.Coil Hole in Dash.	1 Off.
K-4407/Z		Washer - for above.	1 "
K-4310/Z		Nut - for above.	1 "
RD-4226		Condensor - Coil.	1 "
R-1925/Z	(c)	Setscrew - Support Tube, Throttle Barrel & Breeches Piece to Dash.	4 "
K-9006/Z		Spring Washer - Support Tube.	4 "

NOTES: (c) Items NOT required if hinged flaps are fitted over outlet ducts at Windscreen.

(d) Items required if hinged flaps are fitted over outlet ducts at windscreen.

(e) Items NOT required after Chassis No.B-193-DZ.

For identification of the above L.O.P. the Demister Motor Elbow is constructed from an aluminium tube as compared with the earlier scheme which used a cast elbow.

The following items have been superseded in the above L.O.P., but may still be required for replacement on cars which have been fitted with the earlier edition of this scheme.

R-4413	Air Intake Duct Assembly.	1 Off.
R-4360	Demister Blower.	1 "
RD-5077	Conduit Pipe.	1 "
R-4362	Support Tube.	1 "
R-4358	Hose - Air Intake Duct - Conduit Pipe.	1 "
R-4361	Hose-Support Tube to Motor.	1 "

FOR INFORMATION.

INSTRUCTIONS FOR FITTING MATRIX WITH DEEP FRONTAL AREA ON EARLY MODEL BENTLEY MK.VI.

The following information is for the assistance of Retailers should it be decided to replace the original shallow type radiator matrix (Fig. 1) with the current deep type matrix (Fig. 2) in order to improve the cooling on early model Bentley Mark VI cars in service.

FIG. 1. SHALLOW MATRIX. (ORIGINAL TYPE).

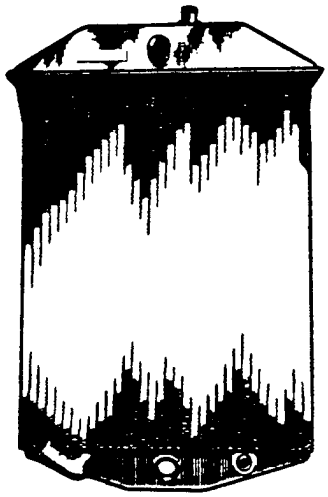

FIG. 2. DEEP MATRIX. (CURRENT TYPE).

FITTING PROCEDURE.

A. REMOVAL OF THE RADIATOR ASSEMBLY:

1. Remove the bonnet - withdraw the small bolt from the hinge-pin bracket on the dash.

2. Release the filler cap, and drain the cooling system by opening the tap on the pipe connecting the water pump with the bottom of the radiator.

3. Remove the forward right and left-hand front bumper retaining bolts, slacken off the remaining two bolts and allow the bumper assembly to swing downwards.

4. Open the front of the centre lamp, disconnect the wires and then pull these clear of the lamp bracket.

5. Remove the six bolts (three on each side) securing the front apron to the front wings. Remove the centre lamp.

6. Remove the right and left-hand front bumper fairings (if fitted).

7. Jack up the front of the car and remove the front road wheels.

8. Disconnect the radiator from the valance plates as follows:-

a) Remove the line of four setscrews along the leading edge of each front wing, and also the single setscrew (on either side) which is located approximately 2.00" to the rear of No. 2 screw (counting from the bottom) already removed. Remove the two bolts on either side which retain the horn brackets in position. (N.B. The horns should NOT be allowed to hang on their wires as they may become disconnected).

b) Remove the bolts (one on either side) which secure the top of the yoke to the top of the valance plates.

9. Disconnect the top radiator hose connection.

10. Disconnect the bottom radiator hose connection. (N.B. The existing pipe connection should also be removed and discarded).

11. Remove the bottom centre screw securing the yoke to the front chassis cross-member, and with two operators pulling the wings slightly away from the radiator, lift and carefully remove the radiator assembly from the car.

B. DISMANTLING OF RADIATOR ASSEMBLY:

1. Remove the outer shell from the radiator (six screws and nuts at the top and two setscrews along the bottom edge).

2. Bend the locking tabs up and remove the wedges from the top of the yoke side members.

3. Remove the two diagonal stiffeners across the rear of the yoke, and then slide the matrix out.

C. MODIFICATION OF THE EXISTING YOKE:

NOTE: This is necessary in view of the increased length of the new type matrix. Figs. 3 & 4 illustrate the yoke before and after modifying and are included as a means of assistance to operators when carrying out the following instructions.

1. Using a cold chisel, cut the spotwelding at each end of the matrix cradle (1, Fig. 3) and remove the cradle. Clean up the two supporting straps with a file, and then bend these downwards parallel with the sides of the yoke (as shown in 1, Fig. 4).

2. Cut away the spotwelding between the baffle plate (2, Fig. 3). and the yoke frame and remove the plate. Clean up the frame with a file.

3. Cut off a section of the original cradle to correspond with the flat at the bottom of the yoke frame and position this as shown (2, Fig. 4). Slide the new matrix into the yoke so that it rests correctly on the bottom, mark off the relative position of the cradle, and then sweat the new cradle strip to the bottom of the yoke. Replace the new matrix in the yoke and loc in position by means of the original wedges. Refit the two diagonal stiffeners.

4. Fit the new drain tap (RE-3850) into the bottom tank on the right-hand side of the matrix. The tap handle should point to the right and be parallel with the ground (it may be necessary to use both aluminium washers (E-27488) in order to obtain this condition). Fit the new drain pipe (RE-3845) to rear of drain tap, ensuring that this points downwards.

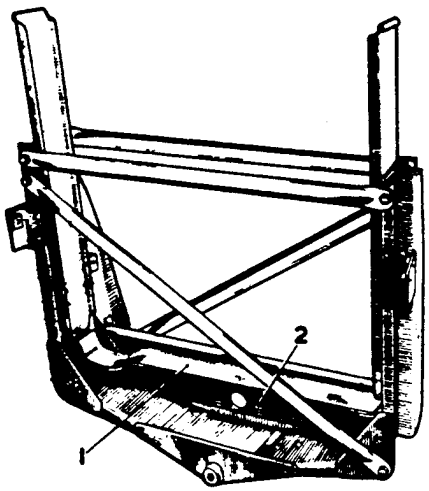

FIG. 3. YOKE UNMODIFIED.

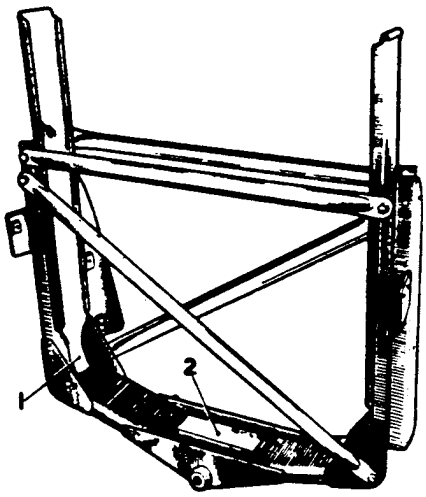

FIG. 4. YOKE MODIFIED.

5. Refit the outer shell to radiator and then re-assemble the complete unit on the car. Line up the new water pump bottom pipe connection (RE-4773) with the bottom tank connection pipe on the left-hand side of the matrix and tighten up the rubber hose connections.

Complete the remainder of the re-assembly of the parts either removed or disconnected. Refill the cooling system.

MATERIAL REQUIRED.

PART NUMBER	DESCRIPTION.	NO. RQD.
RE-9217	Radiator Matrix - Deep Type.	1 off.
RE-4773	Pipe - Bottom Water Connection.	1 off.
RE-3845	Pipe - Drain Tap.	1 off.
RE-3850	Drain Tap.	1 off.
E-27488	Washer - Drain Tap.	2 off.

COOLING - BENTLEY MARK VI.

Some complaints have been received of boiling on recent cars during Alpine climbing in hot weather. It would appear that the margin of safety is not very high on certain cars, and tests have accordingly been carried out to establish the cause and cure.

The following notes may be useful in dealing with complaints:-

1. Tests have shown that the angle of the shutters, by diverting the air to right and left of the centre line of the radiator, leaves a strip about 8" wide down the centre of the radiator which is not cooled by the incoming air. The greatest improvement can be made by altering the shutter angle from 43°, the present setting, to 37°.

   This can be done by removing a rivet from each end of the shutters, swinging the shutter on the remaining rivet, and soldering in the new position. The best results are obtained with the widest gap possible consistent with reasonable appearance.

2. The mixture strength on $4\frac{1}{2}$ litre cars may be too weak. The carburettor needles originally fitted were SN. A useful improvement both in power and coolness of running can be achieved by fitting SP needles. These needles have now been standardised.

3. Some radiators may be partially choked with insects, butterflies or paint. A useful improvement can sometimes be made by cleaning the radiator.

4. Where silting up is suspected, the system should be thoroughly flushed out, and an alteration to the dynamo circuit made to neutralize electrolytic action. This will be the subject of a further Bulletin, meantime apply to Hythe Road for details in complaint cases.

5. The fan speed was reduced at Chassis No.B-213-GT in order to reduce fan noise. This has slightly reduced the cooling efficiency but not sufficiently to cause overheating unless the safety margin is low for other reasons.

THIS BULLETIN CANCELS:						
BB-142	dated	4. 3.52	BB-145	dated	25. 3.52
BB-142	"	22. 7.53	BB-110	"	9.10.50
BB-142a	"	9. 5.52	BB-112	"	7.12.50
BB-142a	"	14.10.53	BB-112a	"	21.6.51
BB-144	"	10. 3.52			

OVERHEATING DUE TO CHOKED RADIATORS

GENERAL:

Instances of overheating have been the subject of investigation for some time and the Bulletins mentioned above were issued to assist all concerned.

Further investigation and research into the causes now necessitate the issue of modified information, and it has therefore been decided, for the sake of simplicity, to cancel all previous Bulletins and include in this one, all the available information.

The majority of overheating complaints are due to choking of the upper portion of the radiator waterways by silt formed of corrosion products.

Most proprietary anti-freezes contain an inhibitor to retard corrosion, but if they are left in the system indefinitely, acids are formed and the cast iron cylinder block is attacked. In addition, since the components of the cooling system are of dissimilar metals, there is corrosion by electrolytic action. In effect, even inhibited anti-freeze not only loses its capacity to retard corrodion, but ultimately assists in the formation of silt.

It has been found that additional protection can be obtained from inclusion of another chemical in proprietary anti-freezes. This has now been added to the ethylene glycol used at the factory and at the Service Dept. Arrangements have also been made to include it in the proprietary anti-freeze which we recommend.

In normal circumstances, silt is circulated round the system and will not block the radiator unless the concentration is very high, but in the presence of a large difference in electrical potential between the engine and radiator, the silt, which has high iron content, adheres to the radiator as in electro-plating. The existence of such an electrical condition was discovered during general investigation into the overheating problem and was largely eliminated by special bonding of the electrical system.

As a further safegaurd against corrosion, the interior of the engine block is now coated with an aluminium pigmented stove enamelling varnish in order to reduce the area of iron in contact with the coolant to a minimum, but this cannot be applied retrospectively.

In spite of all precautions, it remains undesirable to keep anti-freeze in the system too long, and we recommend that it should be changed once a year.

SILT FORMATION AND PREVENTION

The silt consists of about 80% iron oxide, resulting from corrosive attack of the coolant on the cast iron of the engine block. A small quantity of iron forms a comparatively large volume of silt, and although the amount of metal removed is insignificant, the results from a cooling view-point may be serious.

The cooling system is, of necessity, a multi-metal one, and any coolant will attack the various metals after a considerable period of service. Tap water will corrode iron; the alcohol and ethylene glycol anti-freezes, and the majority of corrosion inhibitors and radiator cleansing chemicals, will eventually attack the metals of the system. Once this action commences, it is difficult to stop, a normal flush out and coolant change being insufficient unless the corrosion products are entirely removed or chemically neutralised.

Apparently unrelated variations in design or in service conditions may effect the rate of silt formation between one model and the next, or even between similar cars. The type of coolant, its chemical composition, its velocity at certain points of the system and at different metal/coolant faces, its degree of aeriation, oxidation and length of service, the running temperatures and gradients, individually or together with the various combinations of metals in the system, may greatly accelerate or retard the action.

In order to reduce the effect on iron triethanolamine phosphate inhibitor was added to the ethylene glycol used at the factory, and to the recommended proprietary anti-freeze. This forms a thin protective film on the iron, preventing further attack. Unfortunately high coolant velocities destroy this film by erosion, when the inhibitor again combines to reform the film, while the matter removed by this cycle appears in suspension the cooling system as ferrous-ic phosphates or hydroxides. The copper in the system combines with the inhibitor, producing cuprous-ic salts which act as a catalyst, accelerating the corrosion of iron should the same coolant be retained for long periods.

A further inhibitor, sodium mercaptobenzothiazole has now been added, which protects the copper in a similar manner to the iron corrosion inhibitor, thus preventing the formation of the catalyst and results in long-term protection of the iron.

The mercaptobenzothiazole component of the inhibitor is consumed both by oxidation, and by its utilisation in creating the protective film on copper. As with the phosphate film on iron, erosion occurs and the inhibitor is slowly consumed in re-forming the film.

Should this inhibitor be used in systems which were previously unprotected, the copper corrosion products present will result in its rapid consumption and may cause complete exhaustion within a few hours, but if the precautions outlined under "Annual Routine Servicing" are carried out, the benefit of the triethanolamine phosphate and sodium mercaptobenzothiazole inhibitors will be obtained, giving full protection to the cooling system for twelve months service.

A ready means of identifying anti-freeze containing the additional inhibitor has been provided by the addition of a small quantity of the sodium salt of fluorescein which imparts a distinct fluorescent effect to Bluecol and to the ethylene glycol used at the factory. The former remains blue, but the latter is discoloured a yellowish-green.

WORKSHOP ACTION:

The action to be taken in Workshops can be divided into the following categories:-

1. Routine annual changing of anti-freeze.

2. Modification of the electrical bonding.

3. Protective action while decarbonizing or whenever the system is to remain dry.

4. Flow testing the radiator.

ANNUAL ROUTINE SERVICING:

Drain the system and flush out as follows:-

1. Remove the top and bottom radiator hoses and reverse flush the radiator with mains pressure for ½ hour.

2. Remove the cylinder block drain tap and thermostat or thermostat housing and flush from both ends for about ¼ hour each.

3. Refill the system.

3a. Smith's "Bluecol" anti-freeze and the Ethylene Glycol used at the factory now both contain the new inhibitor, but before using either in a car which has been filled with the earlier anti-freeze, the following action is necessary to conserve the new inhibitor which will otherwize be consumed within a few hours.

a) Start the engine and run for a few minutes.

b) Remove cylinder drain cock and insert a hose into the radiator, run the engine, occasionally opening the throttle slightly until the water runs clear; this usually takes about 20 minutes.

c) Replace the drain cock, add ½ pint of Stergene to the full system and run for 5 minutes at normal engine temperature.

d) Repeat (b) and run until cool, then switch off and leave until engine is cold. Start up and run until the water ceases frothing.

e) Drain and refill with anti-freeze.

This operation need only be done once on any car, provided that the owner continues to use the recommended anti-freeze.

NOTE: A distinct fluorescent effect can be observed in the new type proprietary anti-freeze; the ethylene glycol equivalent is yellowish-green.

MODIFICATION OF ELECTRICAL BONDING AND INSULATED DYNAMO:

Basic Requirements:

The retardation of silting by electrolytic methods has been achieved by insulating the dynamo from the engine, bonding dynamo to radiator and utilising the current to reverse the normal polarity of the potential differences existing between radiator and engine.

The radiator must be at least 2M.V positive to engine when the headlights are on and the engine running with the ammeter reading zero. With no electrical load and the ammeter reading 10 amps. charge, the radiator should not be greatly in excess of 25 M.V positive to engine. These readings may be checked by millivolt meter or Avometer, if available. Avometer Model 7 gives a direct millivolt reading when set to the 2 m.a. range D.C.

Various methods of bonding have been used, not all of which have produced the desired polarity. Those which are doubtful require further modification on a Category 2 basis. For these cases, a new type of bonding has been devised which automatically gives the correct conditions without necessitating the use of an instrument for checking.

BONDING:

The existing and new bonding systems are as follows:-

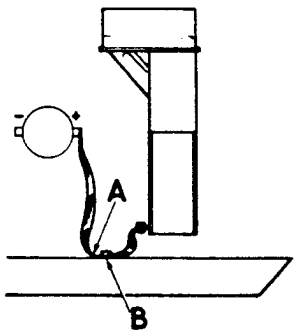

P.1. 1st Production Scheme.

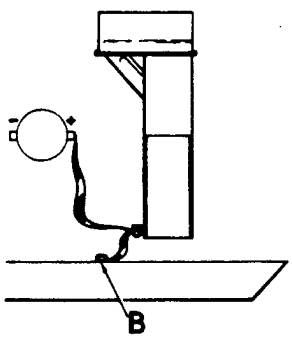

P.2. 2nd Production Scheme.

Production schemes may be recognised by the provision of a separate bolt (B) for the bonding on the R.H. frame member.

Scheme P.1. to be modified to Scheme P.2. by cutting off the bonding braid at A as close to the bolt as possible. Fit a new strip as in P.2. (Category 2 Action).

MATERIAL REQUIRED:

Bonding Strip, Dynamo to Radiator. RD-7568 1 Off.

TIME ALLOWANCE: 1 Hour.

CHASSIS NUMBERS AFFECTED:

Bentley Mk.VI.

B-330-MD; B-334-MD to B-340-MD inclusive.
B-390-MD to B-400-MD inclusive; B-15-MB.
B-131-MB to B-137-MB inclusive; and
B-233-MB to B-208-TN inclusive (or to B-130-TN on Coachbuilt Bodies).

Bentley Continental: BC-1A to BC-23C inclusive.

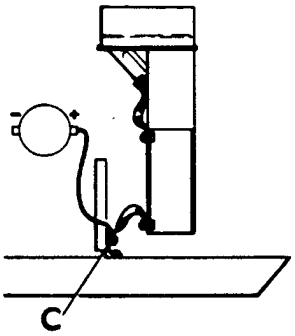

S.1. 1st Service Scheme.

1st Service Scheme (S1) to be modified to 3rd Service Scheme S3. (Category 2 Action).

Material:- Bonding assembly R-5007.
Clip F-59140 1 off.

Time Allowance:- 1 Hour.

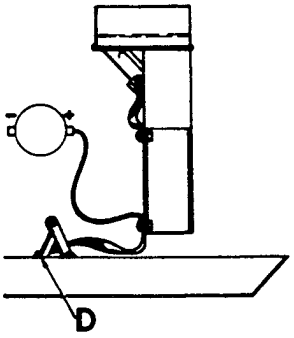

S.2. 2nd Service Scheme.

2nd Service Scheme (S2) to be modified to 3rd Service Scheme (S3) only where values are checked and found to be incorrect or on overheating complaints.

Material:- Bonding assembly R-5007.
Clip F-59140 1 off.

Time Allowance:- 1 Hour.

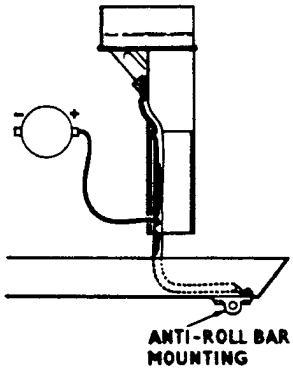

S.3. 3rd Service Scheme.

3rd Service Scheme (S3). The braid is run down the channel formed by the outer side member of the radiator yoke, and the whole bonding positioned to avoid the possibility of contact with sharp edges. The lower end with the 5/16" eye is fitted to the front bolt of the anti-roll bar and the upper end to the radiator header tank strut as shown in the diagram; both contact surfaces must be clean.

It is essential to fit bonding eye direct to frame - not to bracket.

DYNAMO INSULATION:

Insulation of the dynamo from the cylinder block is associated with the bonding and should be done when the bonding is originally fitted.

There are two methods of insulating the dynamos:-

1. On production and replacement dynamos, the positive brush is insulated and a terminal provided opposite the negative terminal (Fig. 1).

2. On existing dynamos, the bracket is insulated from the dynamo by means of special fibre bushes and washers, the bonding cable being attached to the rear mounting bolt as in Figs. 2 and 3.

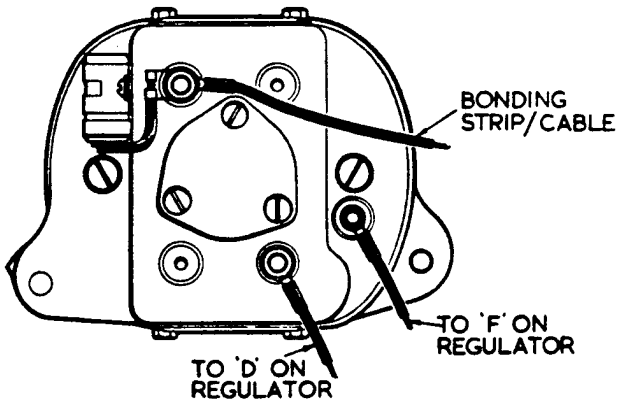

Fig. 1.

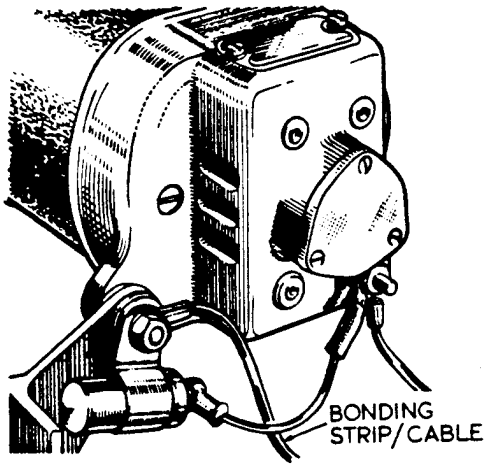

Fig. 2.

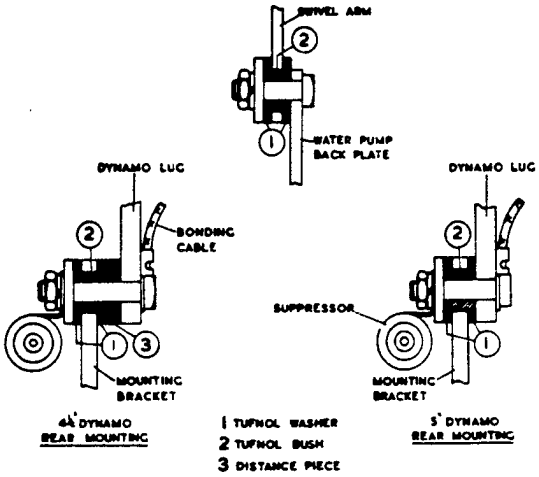

Fig. 3.

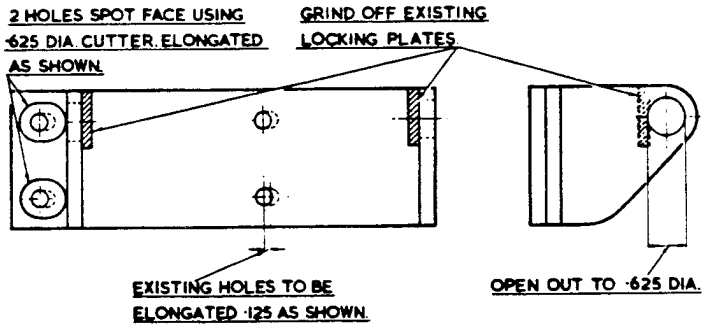

Fig. 4.

Fig. 3 shows the method of mounting the dynamo and insulators, but it should be noted that the distance piece (3) is only used on the C-45-PV dynamo. The modifications required on the C-45-PV bracket itself are shown in Fig. 4; these brackets are not supplied. The RA-5 bracket is available from the Service Department.

MATERIAL REQUIRED:-

(For either type of Dynamo):

Bush, Tufnol	R-4677	3 off
Washer, Tufnol	R-4673	6 off
Bonding Assembly	R-5007	1 off
Clip, Cable	F-59140	2 off
Washer, Dynamo to Bracket	R-4803	3 off
Bolt, Swivel Arm to Crankcase	K-308	1 off
Bolt, Bonding to Matrix	KA-202	1 off
Nut, Bonding to Matrix	K-4008	1 off
Washer, Bonding to Matrix	K-9008	1 off
Bracket, Dynamo Mounting (RA-5 Dynamo only).	R-4574	1 off
Swivel Arm (RA-5 Dynamo only).	R-4676	1 off
Bolt, Dynamo to Bracket (RA-5 Dynamo only).	K-312	2 off
Swivel Arm (C-45-PV Dynamo only).	R-4733	1 off
Bolt, Dynamo to Bracket (C-45-PV Dynamo only).	K-312	1 off
Bolt, Dynamo to Bracket (C-45-PV Dynamo only).	K-314	1 off
Distance Piece (C-45-PV Dynamo only).	R-4734	1 off

TIME ALLOWANCE: 4 Hours

NOTE: The C-45-PV ($4\frac{1}{2}$") Dynamo is fitted on Chassis Nos.B-2-AK to B-424-CF inclusive. The RA-5 dynamo is fitted on Chassis No. B-426-CF onwards.

Price of material is available on request at the London Service Station.

Material ordered for stock will be invoiced, but may be charged back to the Company if used under guarantee.

PROTECTION OF EMPTY COOLANT SYSTEMS:

It is important that the cooling system should not be allowed to dry without first removing the accumulated silt, otherwise this may be very difficult afterwards and will lead to overheating immediately after decarbonizing and similar work.

Whenever the cylinder head is removed, the cylinder block should be cleaned out by removing the drain cock and connecting a pressure wash hose to a $\frac{1}{4}$" tube, the end of which is blanked off and a delivery aperture cut in the wall as close to the end as possible. The tube is then inserted to the bottom of each waterway and the jet directed along each channel in turn. The results should be checked by dipstick methods to ensure that all silt has been removed. The cylinder block should then be refilled up to the diffuser tube level and the radiator refilled and plugged.

Similar precautions should also be taken with the cylinder block when a new radiator is fitted. In this case, if the head is not removed, it should be flushed as described in (2) under Annual Routine Servicing.

RADIATOR FLOW TESTING:

The radiator may be checked by means of a water flow test. A container with a 1" bore pipe let into the bottom should be hung above the radiator and connected to the header tank intake pipe, the radiator lower connection being allowed to run to waste. The tank should be suspended so that the centre is 3ft above the radiator intake pipe, when the time taken for the tank to empty will give an approximation of the condition of the matrix. The figures given below do not include the time required for the radiator to empty after the flow from the tank has ceased. The water level in the tank may be observed if the top is cut open; a mirror attached at a suitable angle would permit observation from ground level.

Container:		Mk.VI Rad	Mk.VII Rad
5 Gall.	(Oil Drum)	14 secs.	22 secs.
10 "	(Tank)	28 "	44 "
18 "	(Petrol Tank)	50 "	80 "

These flow times are for a radiator in new condition.

NOTE: The Mk.VII radiator which was fitted on Chassis No. B-270-DA and onwards, incorporates a drain tap and a starting handle tunnel in the bottom tank, neither of which is featured on the earlier type.

Should the flow time exceed those quoted by over 25%, it is probable that the radiator is the cause of overheating, and should be replaced. It is not now considered advisible to attempt any chemical de-silting owing to the high percentage of subsequent leakage complaints.

When fitting a replacement radiator, it is essential to flush out the engine thoroughly. The thermometer and thermostat should be carefully checked, as these may be damaged by severe overheating.

A radiator with a flow figure of less than 25% above the nominal should be given a Cooling System Service as a preventative measure, but it is not likely to be the cause of overheating in this condition.

Category 3A. Chassis No. B-270-DA & Onwards:

CORRUGATED HOSE CONNECTION - RADIATOR TO WATER PUMP.

A flexible corrugated rubber hose is now being fitted between the coolant pump and the bottom outlet pipe of the radiator. This is intended to reduce the strain on the bottom connection, which arises from relative movement between the radiator and engine.

The original hose connections were of stiffer rubber, and fractures have occurred at the junction of the pipe with the radiator bottom tank.

The new rubber hose (Part No. RE-18218) should be fitted to cars with deep type matrices whenever a radiator is changed, or when the engine is decarbonised.

If the radiator is changed under guarantee, the hose should be supplied free of charge; in other cases it is a chargeable item.

It is recommended that appropriate quantities should be ordered and held in stock.

MODIFICATION

For Category 2 Action:

The Bentley Continental Heater Return Pipe.

It has been found in service that the heater return pipe on the Bentley Continental Sports Saloon is subject to fracture at the junction of the return pipe from the underwing demister unit, due to strain. The junction is shown in Fig.1.

From Chassis Number BC-29-C and onwards a new pipe having a strong saddled junction is being fitted on production. The return pipe from the demister unit is joined with a short length of rubber hose and two clips in place of the earlier screwed union. In this way the strain at the junction is relieved. (Fig. 2).

The new heater return pipe is to be fitted as a retrospective modification and Retailers are asked to modify any cars in their area when next they are serviced.

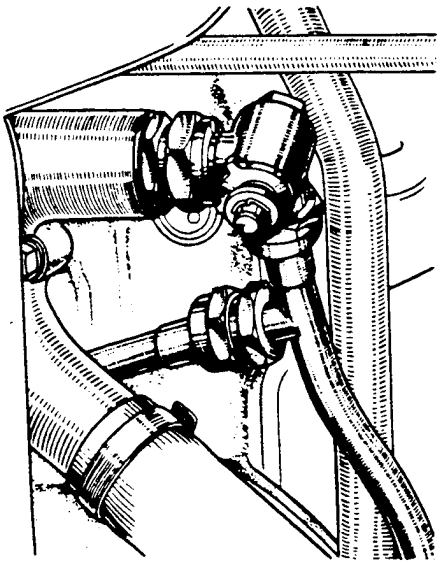

FIG. 1 THE EARLY HEATER RETURN PIPE.

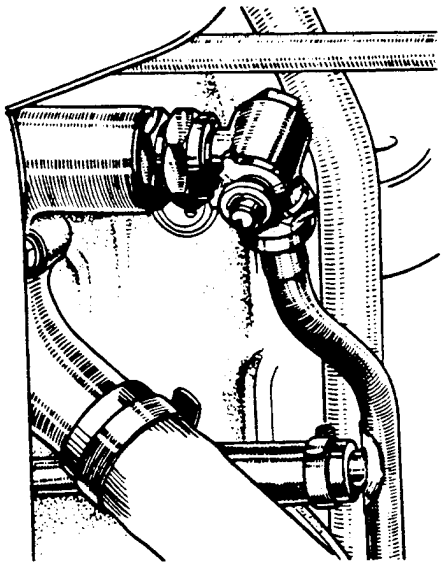

FIG. 2 THE NEW HEATER RETURN PIPE.

MATERIAL:

RE.18690	Heater return pipe	1 off
RE.9418	Clip, connecting hose	2 off
R.4093	Rubber hose	1 off

These parts will be supplied upon application to the London Service Station.

PROCEDURE:

1. Drain the cooling system.

2. Disconnect the demister unit return pipe at the rubber hose connection. This pipe is the lower of the two pipes leading into the wing on the right hand side of the engine.

3. Disconnect the heater return pipe at the junction below the tap on the water pump (A Fig. 1).

4. Remove the nut retaining the heater return pipe clip on the timing case retaining bolt and disconnect the bottom of the pipe at its rubber hose connection.

5. Remove the pipes from the engine and disconnect the demister return pipe at its screwed union. With a hacksaw, cut the demister return pipe at its bend approximately 2½" from the union end. Swage over the cut end to form a lip for the rubber hose and fit the hose and clip. Fit the hose to the heater return pipe but do not tighten the clip.

6. Refit the pipes to the engine and tighten the hose clip when the pipes are correctly positioned.

7. Refill the cooling system.

CHARGES:

Charges should be submitted on a Guarantee Form in the usual way. A time of 2 hours is allowed.

FOR INFORMATION

THREE POSITION

HEATER AND DEMISTER SWITCHES.

Cases have occured of heater and demister motors failing to start at low temperatures with the switches in the slow speed position. This Bulletin sets out details of a method of reducing the internal resistance of the switch at the slow speed position from 7 ohms to 5 ohms to ensure that the motor will start at all temperatures.

It is pointed out, however, that a new heater may not operate satisfactorily at slow speed until after a reasonable period of running in. A modification to the switch to meet a customer's complaint should not be carried out until after running in is completed.

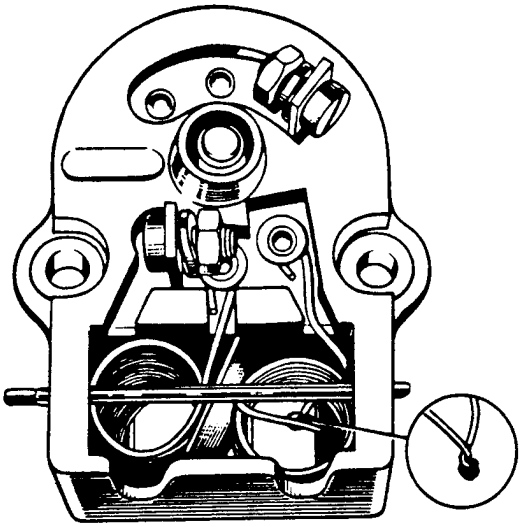

THE MODIFIED SWITCH SHOWING
THE 'BLOB' WELD.

TO MODIFY THE SWITCH.

(i) Remove the wooden facia panel and remove the switch from the instrument board.

(ii) Remove the pin retaining the two resistance coils after clinching one end in a vice. Pull out the mica separator.

(iii) Cut off the wire from one terminal at the first coil so that approximately 1" (25 mm) is left attached to the terminal. Bend this short length upwards.

(iv) Ease up the free set of coils with a screwdriver and cut off 13 complete coils.

(v) Rejoin the wire by twisting the free ends together. Weld the twist together to leave a blob at the end as shown in the illustration. A carbon arc should be used operating at 8 to 12 volts and a flux mixture of calcium fluoride and borax is recommended.

(vi) Bend the joined wires so that they lie inside but clear of the coil. Replace the mica separator and retaining pin. The resistance measured across the terminals should now be between $4\frac{1}{2}$ and 5 ohms.

(vii) Refit the switch and facia board.

Where facilities for welding are not available the modified switch may be obtained from the London Service Station under Part No. R.5321. The replaced switch should be returned to the London Service Station.

FOR INFORMATION.

HEATER SPARE PARTS.

Retailers are advised that the following spare parts are now available for standard underseat and underdash heaters:

1. RD.3283 Shallow Matrix Underseat Heater

Fitted to: Bentley Mark VI, Series A,B,C and D up to Chassis No:B-235-DZ

CD.317	Motor CHS 352	
CD.318	Mounting Rubber - Motor	(6 Off Required)
RE.10659	Matrix	
R.4342	Fan	

2. RD.6924 Deep Matrix Underseat Heater

Fitted to: Bentley Mark VI and 'R' Type from Chassis No:B-237-DZ onwards

CD.316	Motor CHS 364/4	
CD.318	Mounting Rubber - Motor	(6 Off Required)
RD.7853	Matrix	
RD.6923	Fan	

3. RD.7039 Underdash Heater

Fitted to: Bentley Continental

R.4784, R.4783 Underdash Heaters

Fitted to: Bentley Mark VI and 'R' Type as additional heaters when required.

CD.316	Motor CHS 364/4	
CD.318	Mounting Rubber - Motor	(6 Off Required)
R.4789	Fan	
R.4785	Matrix	(Bentley Mark VI and 'R' Type only)
RE.10659	Matrix	(Bentley Continental only)

These parts may be fitted under the terms of the Manufacturer's Guarantee if the heater is within the Guarantee Period.

New Mounting Rubbers are required whenever a new motor is fitted.

RADIATOR TOP HOSE.

A new rubber radiator top hose is now available for replacement purposes. The hose is corrugated for 2¼" at the radiator end and provides a more flexible connection between the radiator and thermostat housing. It replaces the two short rubber hoses and metal pipe fitted on production models.

The new hose should be fitted whenever replacement is necessary and should be retained with two of the four jubilee clips removed from the old assembly.

Parts Required.

RE.18853 Hose - top water connection 1 Off.

FOR INFORMATION.

ANTI-FREEZE MIXTURES.

Only an anti-freeze mixture to specification DTD.779 should be used, and the following is a list of those officially recommended:-

Bluecol	-	Messrs Smiths (M.A.) Ltd.
Snowflake	-	Messrs Snell Oil Co.Ltd.
Polar Anti-freeze	-	Messrs Germ Lubricants Ltd.
Greenglow	-	Messrs Calder Oils Ltd.
Lautol	-	Messrs James Light & Son Ltd
Synool (without suffix)	-	Messrs Synthetic Ltd.
Esso Anti-freeze	-	Messrs Esso Petroleum Co.Ltd.

FOR INFORMATION

REPLENISHMENT OF NaMBT INHIBITOR IN NEW OR CLEANSED COOLANT SYSTEMS

The recommended anti-freezes, which are to specification DTD 779, contain two corrosion inhibitors. One of these, NaMBT (Soldium mercapto-benzothiazole), may be consumed rapidly on initial filling, even in a new cooling system, with consequent loss of protection against corrosion.

On cars delivered recently a small sachet has been provided, to replenish this inhibitor after 1500 miles. It is now proposed to extend this to all post-war cars when the radiator or engine is changed or when the system has been cleaned by flushing out.

This single replenishment of the inhibitor is normally sufficient to ensure that the coolant will fulfil its functions for the whole of its 12 months useful life.

It is essential that the contents of the NaMBT sachet are not added to any coolant other than one containing anti-freeze to Specification DTD 779.

Sachets of Inhibitor (Part No. Y.9111) are available from Rolls-Royce, London, N.W.10.

MODIFICATION

IGNITION COIL INPUT SUPPRESSOR

To reduce electrical interference to the radio from the ignition system, a suppressor unit, (1. mfd. Part No. RD.4031.) is being introduced to the INPUT side of the ignition coil on all cars now being manufactured.

The suppressor is attached to the coil bracket by either of the two existing fixing bolts, the lead being connected to the switch wire (S.W.) terminal of the coil.

Some cars already in service require the incorporation of this modification, and Retailers in whose area these cars are normally kept should take the necessary action.

A visual check of the ignition coil will verify whether this modification has been incorporated; and, if so, whether the suppressor lead has been connected to the switch wire (S.W.) terminal, and NOT to the output (C.B.) terminal of the coil.

A sufficient number of suppressors to cover requirements is being desptached to Retailers overseas, and Retailers in the United Kingdom will be supplied with the necessary parts to cover the cars in their respective areas on application to this Service Depot.

Will all Retailers kindly inform this Service Depot concerning cars on which they carry out this modification.

MODIFICATION.

HORN PUSH BUTTON ASSEMBLY.

A modification is introduced to the horn push button assembly to give additional strength where the contact pillar is screwed into the horn push. The alteration consists of the substitution of the taper pin locking by sweating.

Retailers are requested to modify any cars listed below which are in their respective areas when they come in for servicing or other work.

The letter 'P' will be stamped on the near-side lug of the steering box as a visual means of indicating that this modification has been carried out on any of the individual cars referred to in this Bulletin.

Cars requiring modification are as follows:-

B - AK Series. Chassis Nos.....All cars.
B - AJ Series. Chassis Nos.....1 to 68, 70 to 138, 140 to 160, 174 to 184 - all figures inclusive.

It should be noted that from Chassis No.B185AJ onwards the modification will be incorporated during manufacture, and the letter 'P' will not be stamped on the steering box.

To minimise delay a sufficient number of contact pillars is being despatched to Retailers overseas to cover the modifying of cars in their respective areas. Retailers in the United Kingdom will be supplied with new contact pillars on application to this Service Depot.

Will all Retailers kindly inform this Service Depot concerning the chassis numbers of individual cars which they modify.

The alteration should be carried out free of charge to the customer.

PROCEDURE.

Fig.1. Remove clip fastening horn wire to off-side valance plate and anti-chafing bush from tube at bottom of steering box, remove the pinch bolts and slide the throttle, riding and mixture control levers downwards off their tubes.

Loosen tab washer and remove the nut 'A' from the threaded taper piece 'D'.

Remove the near-side nut 'B' and its lockwasher.

Temporarily fit the nut 'A' back onto the threaded taper piece three or four threads and give it a few sharp taps towards the steering box to loosen the threaded taper piece from its seating, after which the nut can be removed and slipped downwards over the tubes. A receptacle should be placed at the bottom of the steering box to catch the oil that will be lost during the next operation.

Fig.2. The centre assembly of the steering wheel boss is now free to be pulled out of the steering column $1\frac{1}{2}$ to 2 inches, sufficient to allow removal of the three bolts from the underside and thus separate the horn push button and the cover from the lower half of the assembly.

From the horn push button unit tap out the taper pin 'H' and remove the contact nut 'J' and the brass washer 'G'. The push button and its contact pillar 'F' is now free to be removed from its cover.

Tap out the taper pin 'E' from the contact pillar and unscrew the pillar from the button. This contact pillar, with holes drilled through both its threaded portions, and the taper pin 'E' can be discarded.

A new contact pillar, with its top threaded portion tinned with solder is screwed and sweated into the push button.

Temporarily assemble the push button unit and spring in the cover (leaving out the taper pin 'H'), refit to the lower half of the assembly.

A distance of .040" between the contacts is desirable, and this is obtained as follows:-

Measure the distance with a stack of feeler gauges between the underside edge of the push button and the cover. Reduce the stack of feelers by .040", and when the button is pressed, the horn should start to sound just as the button nips the stack of feelers.

The amount of this travel is regulated by the thickness of the brass washer 'G'. If the horn sounds before the button nips the feelers, the brass washer requires reducing in thickness, but if a greater travel than .040" is obtained before the horn sounds, then a thicker washer is required.

When the correct amount of travel is obtained, the contact pillar is drilled through the existing holes of the contact nut 'J' and the taper pin 'H' fitted. The unit may now be finally refitted in the steering wheel hub.

Refit nuts, tab washers, throttle, riding and mixture control levers on their tubes. Ensure that the riding and mixture control levers give their full amount of travel and that the hand throttle control lever commences to open the throttle at the seventh notch from the fully closed position on the quadrant. Refit the anti-chafing bush and the horn wire slip on the valance plate. Refill the steering box with oil.

Stamp the letter 'P' on the near-side lug of the steering box as indicated in the drawing.

PRINTED IN ENGLAND

Fig. 1.

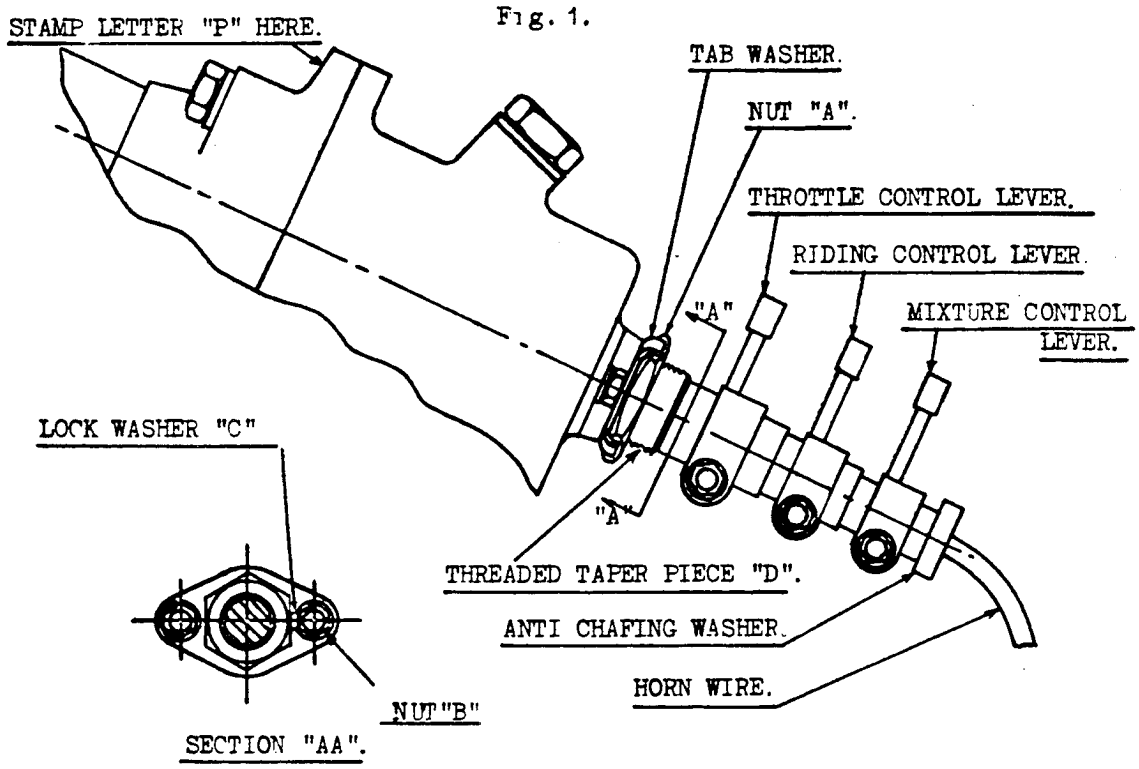
STAMP LETTER "P" HERE.
TAB WASHER.
NUT "A".
THROTTLE CONTROL LEVER.
RIDING CONTROL LEVER.
MIXTURE CONTROL LEVER.
"A"
"A"
LOCK WASHER "C"
THREADED TAPER PIECE "D".
ANTI CHAFING WASHER.
HORN WIRE.
NUT "B"
SECTION "AA".

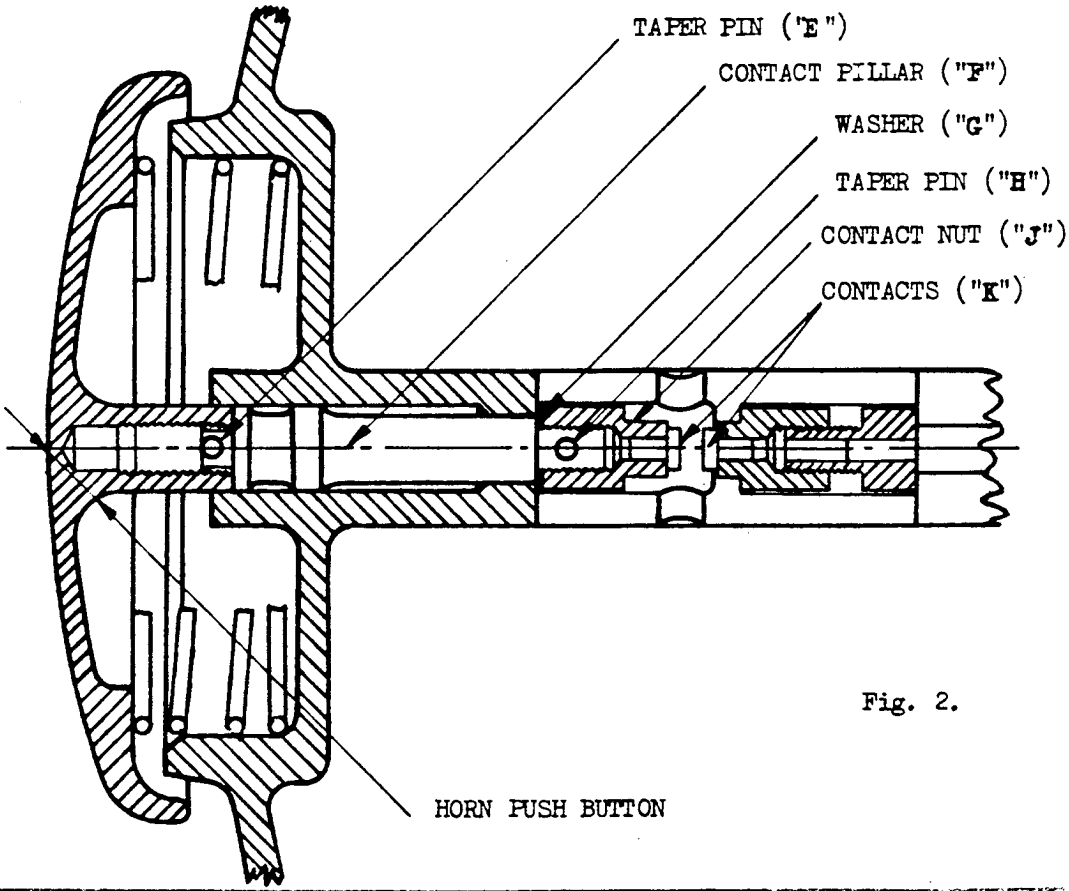
TAPER PIN ("E")
CONTACT PILLAR ("F")
WASHER ("G")
TAPER PIN ("H")
CONTACT NUT ("J")
CONTACTS ("K")
HORN PUSH BUTTON

Fig. 2.

MODIFICATION.

CATEGORY: 3A.

WINDSCREEN WIPERS - ELIMINATION OF NOISE.

The information contained in this Bulletin is issued for guidance in the event of complaint being received concerning the noisy operation of windscreen wiper equipment and covers a recommended procedure for dealing with this matter.

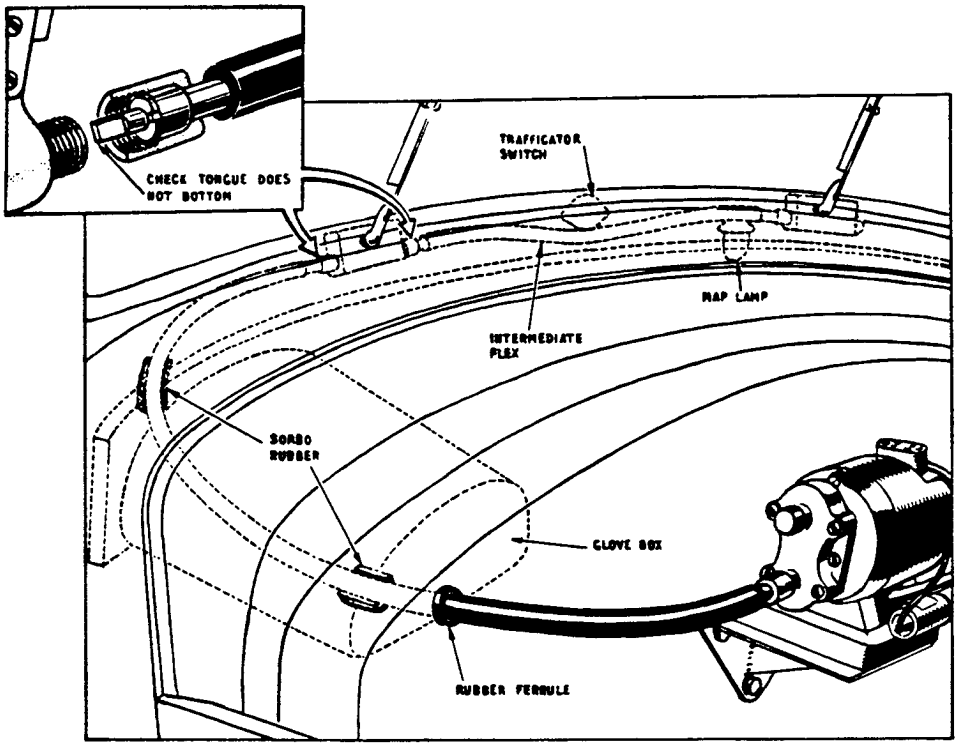

The windscreen wipers are operated by gearboxes and flexible cable drives from an electric motor mounted on the off-side front of the dash.

It has been found that noisy operation may be due to any of the following causes:-

(a) Flexible drives fouling the scuttle rail or glove box.

(b) Rigid attachment of the gearboxes to the scuttle rail.

(c) Awkward bend in flexible drive or bottoming of tongues.

(d) Noisy gearbox.

In the event of it being necessary to gain access to the wiper mechanism, it will be necessary to remove the screen finisher and facia board; this on coachbuilt bodies is sometimes built up in sections and only the facia board enclosing the gearboxes will require removal. The screen finisher and facia board on the Bentley Standard Saloon however, is of the one-piece frame type and the procedure for removing this is as follows:-

Remove the driving mirror; traffic indicator switch and windscreen wiper knobs. A strip of cloth glued in position underneath the facia board will have to be pulled away to gain access to, and remove the two nuts fixing the "grab" handle and facia board to a metal plate on the scuttle rail on the near-side, and one nut on the off-side. Remove the screws from the screen finisher and pull the top portion of the framework away from the screen and lift upward about 3/16", sufficient to clear the top of the de-mister pipes over which the facia board fits. The complete framework should now be free for removal from its setting.

Having removed the screen finisher, switch on the wipers with the arms removed and listen for noise. Check that the flex does not foul at the points shown in the sketch and if necessary, add small pieces of sorbo rubber to prevent contact.

Slack off the gearbox fixing screws and see whether the noise is appreciably diminished. Rubber sheet in place of the felt mounting pad will be found to effect an improvement. The screws can be left only partially tightened with perfect safety.

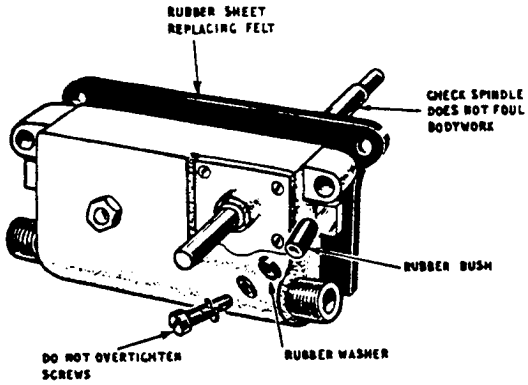

If the noise persists, check that the driving tongues do not bottom in the slots; if necessary, shorten them by filing. Also make sure that the intermediate flexible drive is in the best position for lack of noise by slacking off the knurled nuts and twisting the outer flex to a new position.

In the event of it being established that the gearboxes themselves are unduly noisy, apply to this Service Station for replacements and return the old gearboxes for examination.

WIPER ARMS AND BLADES:

In the event of complaint being received concerning wiper blades that cause smearing of the screen, these will be replaced by a new type arm (Part No:RD-4138) and blade (Part No:RD-4139) on application to this Service Station, quoting the chassis number of the car for which they are required and returning the old parts for examination.

MODIFICATION.

FOR INFORMATION:
and action if necessary.

RADIO INTERFERENCE.

A few cases of radio interference from the "Windtone" horns have been reported.

To obviate this, a modification is to be introduced incorporating a suppressor condensor within the horns.

Where this trouble occurs on chassis without the modified horns, it can be eliminated by fitting an external suppressor in the feed circuit to each horn junction box.

METHOD OF FITTING THE SUPPRESSOR:

1. Remove the screw holding the loom securing clip to the inside of the wing valance.

2. Slip the suppressor bracket between the wing valance and loom securing clip, locate the screw in the bolt hole, and tighten up.

3. Remove the cover from the front junction box and identify the terminal to which the horn INPUT lead is connected. (This can be readily identified by first locating the horn INPUT lead from under the wing.)

4. Connect the suppressor lead to same terminal. (Before carrying this out, cut off the flat terminal at free end of suppressor lead, remove the small rubber sleeve, and bare just sufficient wire to effect a satisfactory connection).

5. Replace the junction box cover, and secure same.

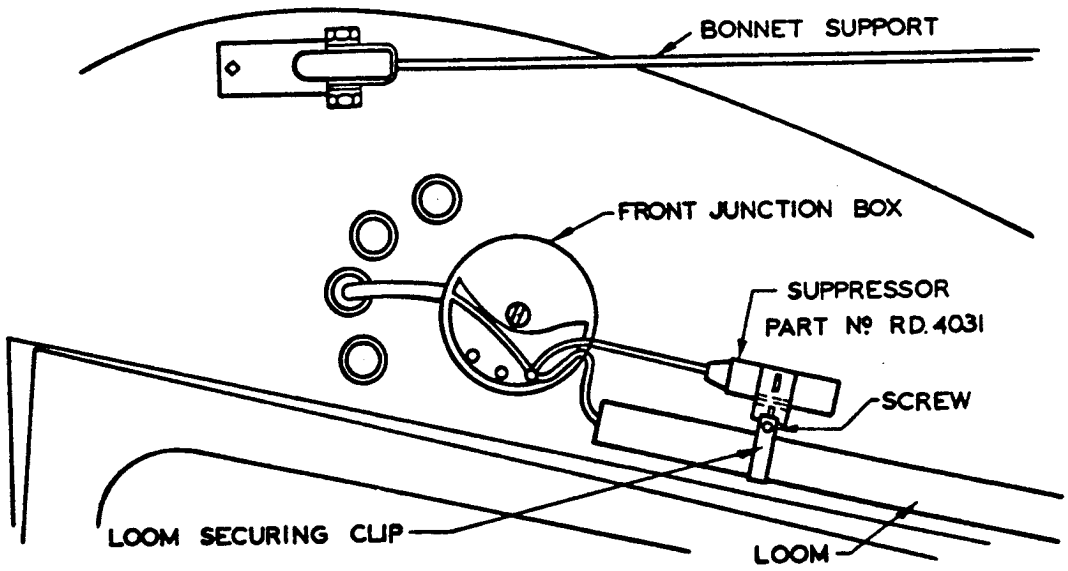

FOR INFORMATION:

ALTERATION IN FUSE WIRE GAUGE.

To provide increased protection to the electrical system on Bentley cars, it has been decided to reduce the gauge of the fuse wire on both the main and circuit fuses to 32 S. W. G. This gives a fusing value of approximately 30 amps. on the circuit fuses, and with three strands on the main fuse 90 amps., replacing the previous fuse wire of 30 S. W. G. which gave 40 and 120 amps respectively.

Will Retailers please note that when existing stocks of 30 S. W. G. wire have been consumed replacements will consist of 32 S. W. G. tinned copper wire.

This Bulletin cancels BB-23 issued on the 17. 11. 47.

MODIFICATION.

CATEGORY 2:

ADDITION OF SUPPRESSOR CONDENSER TO SPARE IGNITION COIL.

A modification is introduced to obviate the necessity for moving the existing ignition coil suppressor condenser when the spare ignition coil is being used. In conjunction with this modification, a clip is fitted to the dash to group the coil wires together and rubber sleeves to the wires to prevent chafing.

Modification action will be required on cars with chassis numbers as follows:-

B123AJ to B247AJ
B2BH to B400BH (except B394BH)
B1BG to B25BG (except B11BG, B21BG and B23BG).

All numbers inclusive.

The above cars are fitted with twin ignition coils, a suppressor condenser to the N/S coil and ignition wiring of sufficient length to reach either coil.

MATERIAL REQUIRED:

Assembly No:	RD4031	consisting of	
		Condenser 1 mfd.....	1 Off
		Rubber sleeve.....	1 "
		Cable eye.....	1 "
Part No:	RD3434	Trimount clip.....	1 "
" "	RD3305	Rubber sleeve.....	3 "

SUPPRESSOR CONDENSER:

This is to be fitted to the off-side fixing bolt of the off-side ignition coil bracket and the suppressor lead connected to the INPUT (S.W.) terminal of the coil.

TRIMOUNT CLIP:

A hole .250" diameter should be drilled through the dash at the point indicated in the attached drawing. This position is immediately behind and on a level with the top of the rocker cover which can be removed to facilitate drilling the hole. The rocker gear should be covered to prevent the entry of swarf during the drilling operation. The drill should not penetrate the dash more than 5/16" as this will cause damage to the insulation situated immediately at the rear of the dash.

RUBBER SLEEVES:

These should be positioned on the wires as shown in the attached sketch. The wires should be connected to the off-side coil, the radio switched on and the engine run to check the suppressor and the ignition coil for correct functioning. The wires can be left connected in this position, the near-side coil becoming the spare.

RUN OF WIRING, POSITION OF CLIP, RUBBER SLEEVES AND SUPPRESSORS.

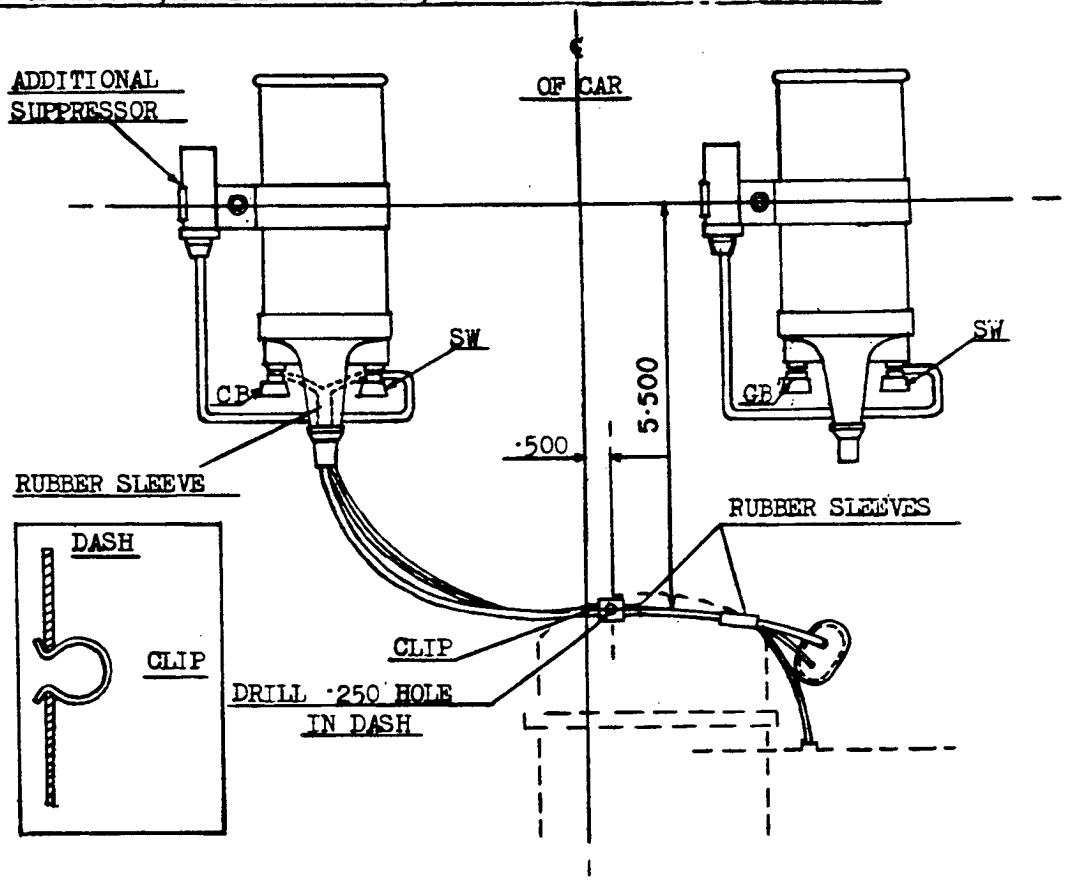

CARS ON WHICH MODIFICATION ACTION IS NOT NECESSARY:

Chassis No: B2AK to B254AK

" " B1AJ and B3AJ

Cars with the above chassis numbers have only 1 coil fitted, being built and delivered to customers prior to the introduction of the spare coil.

Cars with chassis numbers B5AJ to B121AJ were built prior to the introduction of the spare coil, the ignition wiring being of sufficient length to reach the one fitted coil, but a spare coil was provided on the dash before delivery to the customer. Use of the spare coil on these cars necessitates a change-over of the coils.

The modification is being incorporated during manufacture on cars with chassis numbers from B27BG and onwards.

Retailers can obtain the necessary material for carrying out this modification on application to Hythe Road Service Station, chassis numbers of cars to be quoted for which the material is required.

CHECKING IGNITION TIMING.

FOR INFORMATION:

The ignition system is of the battery and coil type feeding a six segment distributor, housing in its top portion two sets of contact breaker points operated by a three-lobe cam, and in its lower portion a centrifugal governor type automatic advance mechanism. The cam rotates in a clockwise direction (viewed from above) and operates the contact breakers alternatively at 60° intervals of cam rotation (120° crankshaft rotation).

Numbered from the front of the engine the firing order is 1-4-2-6-3-5.

On this type of distributor, the ignition timing of No.1 cylinder is carried out on one set of contacts, adjustment being effected by rotating the complete distributor body, and the timing of No.6 cylinder on the other set of contacts which are movable a few degrees round the cam centre to provide adjustment for slight variations in cam form and wear of fibre heels. If the engine will not run evenly at low speeds or detonation is experienced, it may be necessary to check the setting of the ignition timing.

The marking IGN-T.D.C is stamped on the flywheel and registers with a pointer when Nos.1 and 6 pistons are at T.D.C. The marking and the pointer are exposed by removing the small inspection cover from the N/S front face of the clutch housing.

Due to the fact that a friction damped spring drive is used for driving the valve gear and the distributor, and that the starting handle operates to turn the crankshaft through the medium of the spring drive, the starting handle must not be used for timing purposes. One rear wheel should be jacked up, top gear engaged and the engine turned by rotating the wheel in its normal direction of rotation.

A method of determining precisely when the contact points break, is to connect one lead of a 12 volt inspection lamp to the contact breaker terminal of the distributor and the other lead to the distributor body (earth), switch the ignition ON, turn the engine and as the points break contact, the light will come ON. An advantage of using this method is that the inspection lamp can be used to view the position of the flywheel timing marking.

The ignition is first set with No.1 piston at T.D.C. both valves closed andthe distributor cam operating 'A' set of contacts.

PROCEDURE FOR CHECKING IGNITION TIMING:

1. Locking screw ('A' set).
2. Locking screw ('B' set).
3. Adjusting screw ('A' set).
4. Adjusting screw ('B' set).
5. Locking screw (synchronising plate).
6. Locking screw (synchronising plate).
7. Adjusting screw (synchronising plate).

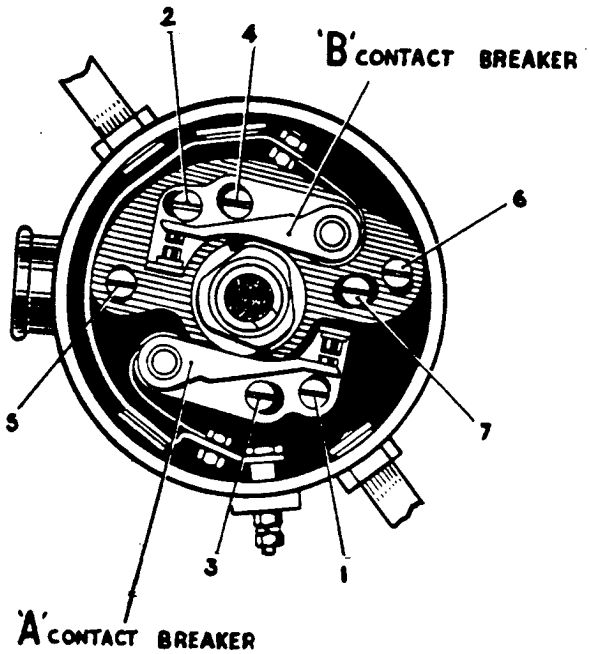

1. Remove the sparking plugs.
2. Jack up one rear wheel, engage top gear, release the hand brake and rotate rear wheel to turn the engine.
3. Remove the inspection cover from the clutch housing for viewing flywheel markings.
4. Set both contact breaker gaps at .019" - .021" using screws 3 and 4 for adjusting and screws 1 and 2 for locking the gaps when set.
5. Connect the leads of a 12 volt inspection lamp as described previously and switch the ignition ON.
6. Turn the engine in its normal direction of rotation until the distributor rotor approaches the No.1 cylinder firing position(approximately 11-o'clock on the distributor), continue to turn slowly until the points of 'A' contacts just break, as indicated by the bulb of the inspection lamp lighting up. Cease turning immediately this occurs and observe the position of the flywheel marking IGN.-T.D.C., which should register with the pointer if the timing is set correctly.
7. If the points break early, then turn the engine to line up the IGN.-T.D.C. marking with the pointer. If the points break late, then turn the engine backwards sufficiently to take up the backlash of the transmission and engine drives and then turn in the normal direction of rotation again to line up the IGN.-T.D.C. marking with the pointer.

8. Slacken the screw of the distributor head clamp, and, holding the rotor in its fully retarded position, rotate the complete distributor body until the points of 'A' contacts just break. Tighten the screw of the distributor head clamp, taking great care not to overtighten to such an extent that the distributor drive bush is distorted.

9. Turn the engine through two revolutions and check the break of the points against the position of the flywheel marking. If necessary, re-adjust and re-check.

   Having set the timing of No.1. cylinder on 'A' set of contacts, it will now be necessary to check the timing of No.6 cylinder controlled by 'B' contacts. This is carried out with No.6 piston at T.D.C. both valves closed.

10. Turn the engine so that No.6 piston is approaching T.D.C. and the distributor rotor approaching the firing position for that cylinder (approximately 5-o'clock); continue to turn slowly until the points of 'B' contacts just break, then observe the position of the flywheel marking IGN.-T.D.C.

11. If the points break early or late, then line up the flywheel marking with the pointer.

12. Slacken screws 5 and 6 and adjust the break of 'B' contact points by rotating the screw 7. Lock screws 5 and 6.

13. Turn the engine through two revolutions and check the break of 'B' contact points against the position of the flywheel marking. If necessary, re-adjust and re-check.

14. Switch the ignition OFF.

NOTE: If continued detonation is experienced due to the use of low octane fuels, it is permissible to set the ignition two or three degrees retarded (5/16" to $\frac{3}{8}$" on the flywheel). In such cases, the ignition should first be timed to its normal setting to ensure synchronisation of the contact breakers, the retarded setting then being effected by rotating the distributor body as described in Operation No.8.

MODIFICATION.

CATEGORY 3A:

WINDSCREEN WIPERS-ELIMINATION OF NOISE.

This Bulletin provides additional information to that contained in Bulletin BB-15, dealing with the elimination of noise from Berkshire screen wiper equipment. All the recommendations made in Bulletin BB-15 should still be effective in the event of noisy operation of these screen wipers, but should noise persist, the following notes will be of further assistance in its elimination.

The following information is not applicable to Bentley Cars fitted with Lucas screen wiper equipment.

1. The driving cables, especially the intermediate cable, have proved to be the source of most cases of noisy operation. Secondary causes are faults in the gearboxes and the motor and reduction gear.

2. All inner cables should have correct end clearance, otherwise, when the cable is bent, the end clearance will be taken up, causing tightness and noise after operating for a short time. Check the cable for end clearance and see that it can be easily rotated when bent to its operating shape. Normally an end clearance of .075" is necessary when the cable is straight.

3. If the end clearance is inadequate, it is permissible to remove the horseshoe retaining washer from one end of the inner cable. The amount of projection of the driving tongue at this free end under operating conditions should be between .500" and .650" to ensure correct engagement. A recommended procedure for checking this projection is as follows:

   Connect the drive at the end fitted with the horseshoe washer. Bend the drive to its operating shape and hold the end face of the outer cable against the end face of the gear box union as shown in the diagram. The projection of the driving tongue should then be within the above limits.

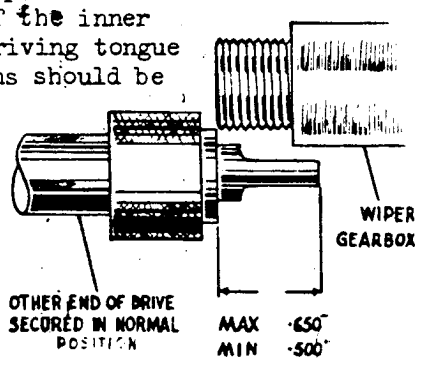

4. The cables should be well greased. This is not easy as the inner cable cannot be removed, but it is possible to force grease down the cable from each end using a grease gun and adaptor on the screwed end cap. Penetration of the grease down the cable will be assisted if the inner cable is worked backwards and forwards and rotated whilst operating the grease gun. The best lubricant for the purpose is a grease like Shell Retinax CD, made sufficiently fluid with the addition of a small quantity of engine oil. Avoid making the grease too fluid or forcing an excessive quantity of grease down the cables, otherwise, the grease will exude on to the trim under the capping rail.

5. The overall length of the intermediate cable measured from collar to collar should not exceed 45.750". If it is appreciably longer than this, an unnecessarily severe bend in the cable is imposed.

6. Complaints of slow operation when cold are probably due to the use of unsuitable grease in the motor and gearboxes. Duckham's ZNOL KG.20 grease has been found to give good results under cold conditions, and should be used in the reduction gear on the motor.

7. Carry out all the other recommendations described in Service Bulletin BB-15. In particular, pay special attention to the insulation of the cables and gearboxes from the scuttle rail, using sorbo rubber or felt for insulation purposes.

INSTRUCTIONS FOR FITTING 7" SEALED BEAM UNIT CONVERSION ASSEMBLY TO LUCAS RF770 HEADLAMPS.

FOR INFORMATION:

In order to comply with American Lighting Regulations, it will be necessary to convert the standard headlamps on cars now in use in the U.S.A., to enable them to be fitted with a 7" Sealed Beam Unit. The conversion assembly unit can be obtained from Lucas Electrical Services (Inc.) 653, Tenth Avenue, New York 19, N.Y.

1. CONVERSION OF STANDARD HEADLAMPS:

To convert standard headlamps, proceed as follows:-

(i) Remove the front rim by slackening the single securing screw.

(ii) Slacken the screws in the flange of the Light Unit and turn the Light Unit in an anti-clockwise direction to detach the flange from the securing screws. The Light Unit can now be lifted out of the lamp body.

(iii) Remove the back shell by twisting in an anti-clockwise direction and cut off the cables at the back shell.

(iv) The Light Unit assembly and back shell can now be discarded.

2. FITTING CONVERSION ASSEMBLY:

(i) Remove the plated unit rim from the seating flange by taking out the two horizontal adjustment screws.

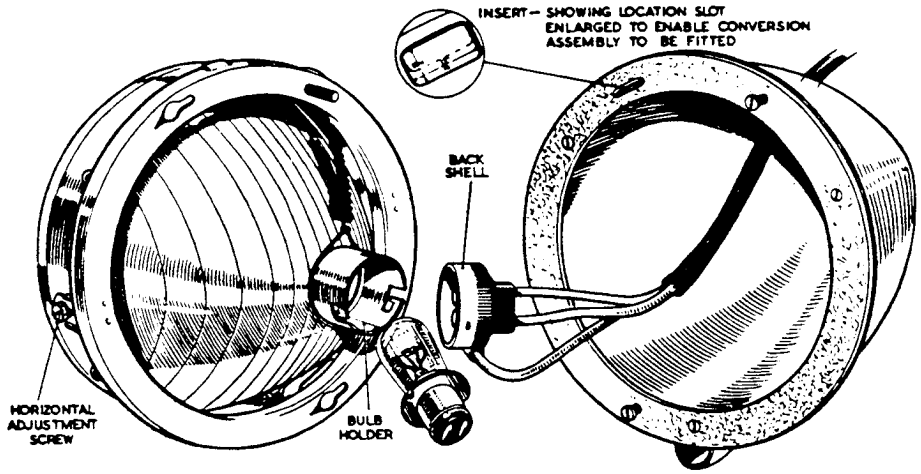

FIG. 1. STANDARD HEADLAMP WITH LIGHT UNIT REMOVED.

(ii) Withdraw the screws securing the Sealed Beam brackets from inside the unit and place the Sealed Beam unit in position. Finally place the brackets in position so that they fit over the locations on the Sealed Beam unit and secure by the fixing screws.

(iii) Fit the seating flange to the unit rim by means of the two horizontal adjustment screws, taking care to locate the rim between the head and flange washer of the vertical adjustment screw.

(iv) To fit the Sealed Beam conversion assembly to the body of the head-lamp, it will be necessary to open up the vertical adjustment screw location slot and cork washer to 13/16" wide by 7/16" deep, as shown in the "INSERT" Fig. 1.

3. WIRING:

Connection to the Sealed Beam unit is made by means of a three point adaptor plug. To make the connections, proceed as follows:-

(i) Bare approximately $\frac{3}{8}$" of the cables.

(ii) Remove the adaptor from the Sealed Beam unit.
NOTE: It will be observed that the rear of the adaptor is marked "Ground", "Pass" and "Drive".

(iii) Remove the three spring contacts from the adaptor.

(iv) Solder the core of the black cable to one of the spring contacts and fit the contact in the recess of the adaptor marked "Ground".

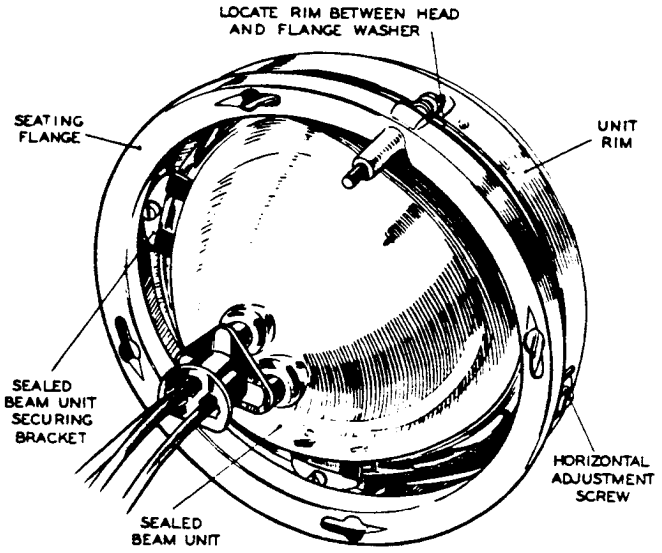

FIG. 2. CONVERSION ASSEMBLY FITTED.

(v) Solder the core of the pink cable to one of the remaining spring contacts and fit the contact in the recess of the adaptor marked "Pass".

(vi) Solder the core of the white cable to the remaining spring contact and fit the contact in the recess of the adaptor marked "Drive".

Finally fit the Sealed Beam unit assembly to the lamp body as follows:-

Position the Sealed Beam unit so that the vertical adjustment screw locates in the location slot in the body of the lamp and the heads of the screws protrude through the holes in the flange of the Sealed Beam unit. Twist the unit in a clockwise direction and secure by tightening the screws. Before replacing the front rim, it will be necessary to set the lamps to comply with the American Lighting Regulations, details of which are given in the following paragraph.

4. SETTING AND ALIGNING (HEADLAMPS).

When setting the lamps, the measurements are to be made with no load on the car except the driver in the front seat.

The headlamps must be set so that the brightest area of the headlamp beams coincides with the vertical centre lines of the headlamps and a line drawn parallel on the screen 3" down from the horizontal centre

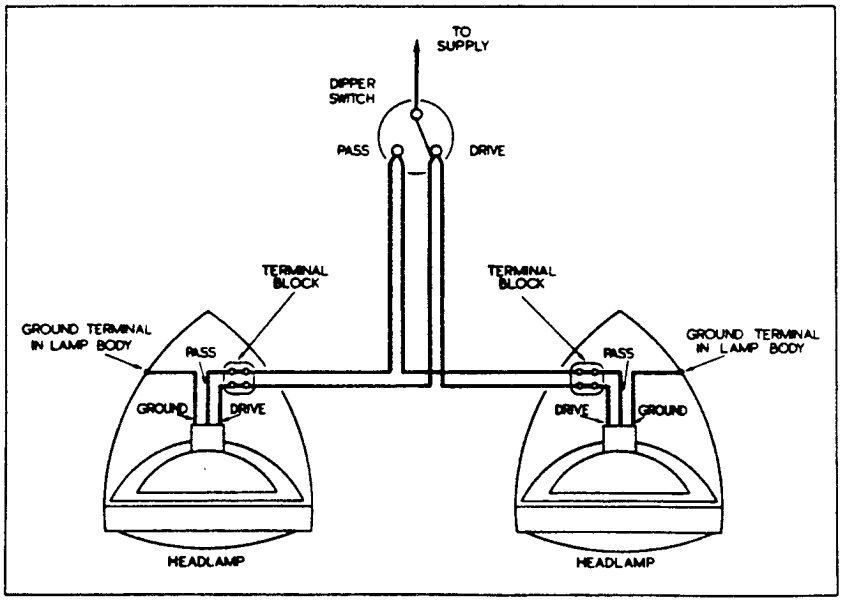

FIG. 3. CONNECTION DIAGRAM.

PRINTED IN ENGLAND

line of the headlamps from the ground (see Fig.4).

To make adjustment to the headlamps, proceed as follows:-

Remove the front rim by slackening the securing screw. Horizontal adjustment to the lamp is carried out by slackening the two screws provided, (one on each side of the lamp).

Vertical adjustment is made by means of the adjusting screw near the top of the lamp.

FOGLAMPS:

The foglamp must be set so that the beam centre is 12" from the centre line of the car, towards the nearside of the road; also the "cut off" of the beam must be set so that it is 3" below the horizontal centre line of the foglamp.

To make adjustment to the foglamp, slacken the single fixing nut at the base of the lamp, move the lamp to the required position, and finally tighten the fixing nut.

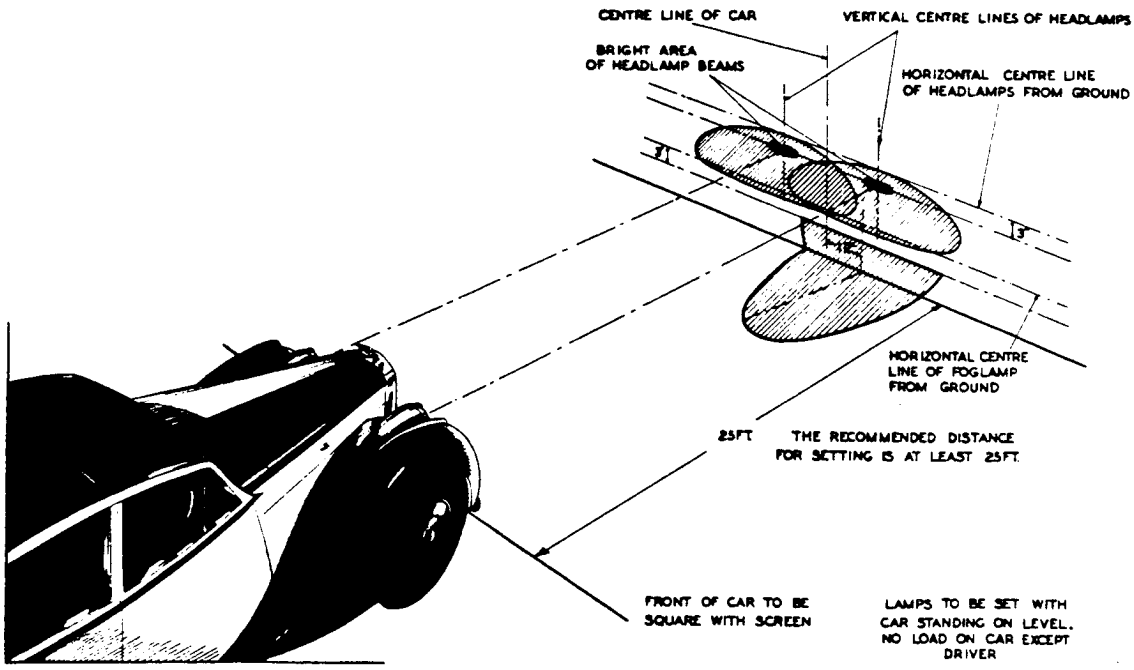

FIG. 4. HEADLAMP AND FOGLAMP SETTING DIAGRAM.

FOR INFORMATION:

PASS LAMPS.

A regulation in effect from January 1949, in the United Kingdom, prohibits the use of a pass lamp, the centre of which is less than 24 inches from the ground. It refers only to a pass lamp which is used as a driving light and does not affect a lamp which is used only in conditions of fog or snow and is operated through a separate switch.

The average height of this lamp on the Bentley Mark VI is 22" and an alteration is therefore necessary, since the pass lamp is part of the standard dipping system. The alteration takes the form of a pedestal interposed between the base of the lamp and front apron as shown in the diagram. All necessary parts may be obtained from the London Service Depot on request.

FITTING INSTRUCTIONS.

RAISED PASS LAMP.

1. Disconnect the pass lamp feed wire from the junction box on the right-hand wing valance, and thread the wire back as far as the lamp.

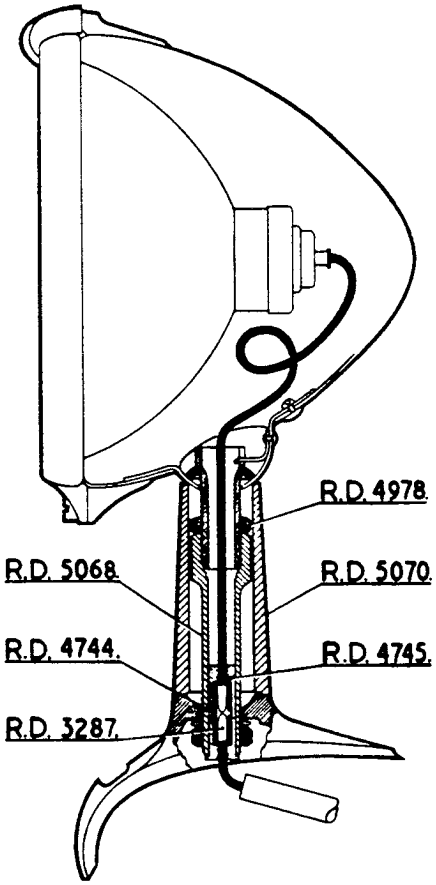

2. Remove the pass lamp.

3. Fit the extension locknut on to the pass lamp hollow bolt and screw on the internally threaded extension as far as it will go. Tighten down the locknut.

4. Cut the wire connected to the bulb adaptor so that it extends $1\frac{1}{2}$" beyond the end of the extension. Remove the insulator for $\frac{1}{2}$" and fit a terminal.

5. Fit the cylindrical metal connector into the rubber connector bush and press the terminal and wire into the unshouldered end.

6. Fit a terminal to one end of the wire supplied and push it into the connector. Do not cut the wire.

7. Pass the extension pedestal over the wire and on to the extension bolt. Thread the wire through the front apron motif and fit the pass lamp with the original "shake proof" washer and nut. Leave the nut slack for final focussing.

8. Connect the wire back to the wing valance junction box through the original waterproof covering and check the circuit, make sure that the wire will clear the starting handle.

9. Focus the lamp in accordance with the diagram on page 3.

The following material is required to carry out this work:-

Part No:	Description:	Quantity:
RD.4750	P.V.C. Single Core Cable.	6-Ft.
RD.5070	Centre lamp pedestal.	1-Off.
RD.5068	" " extension.	"
RD.4978	" " Locknut.	"
RD.4745	Connector bush (rubber)	"
RD.4744	Connector.	"
RD.3287	Terminal.	2-Off.

(Retail price of Material (8.12.48). £1. 0s. 8d.
(Approx. time $2\frac{1}{2}$ hours.

PRINTED IN ENGLAND

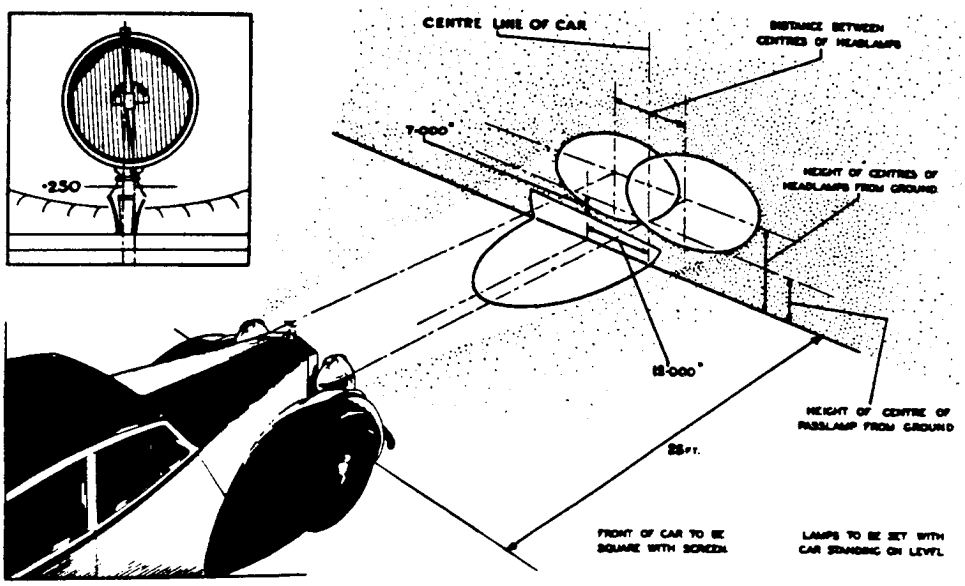

The settings and the measurements between ground level and lamp centres are to be made with the car loaded with five persons. The view inset shows the pass-lamp correctly tilted to correct for road camber.

FOR INFORMATION:

PASS LAMPS.

Please note that the original retaining nut supplied with the pass lamp has been replaced by a cap nut as a means of retaining the lamp connector in position in the base of the extension piece.

The part number of this new nut is RD-6109, and the existing pass lamp retaining nut should be discarded.

Please also amend, in the list of parts required, Part No: RD-4745 from "1 off" to "2 off".

FOR INFORMATION:

REPLACEMENT OF THE 4½" LUCAS C45PV DYNAMO BY THE 5" LUCAS RA-5 DYNAMO

The output of the 4½" Lucas C45PV dynamo fitted to all Bentley chassis prior to B 380 CF, is adequate to meet all battery demands under normal conditions.

A state of persistent battery exhaustion may however, arise on a car which is primarily used for town work, where greater use is made of the starter motor and other electrical accessories and where the journeys are of extremely short duration.

In such cases it is recommended that the owner should be offered the 5" Lucas RA-5 dynamo as a chargeable improvement. This has a maximum output of 25/27 amperes compared with the 20/22 amperes of the existing 4½" dynamo.

It should be noted that when the RA-5 dynamo is fitted, a higher capacity voltage control regulator and ammeter will also be required, and owing to the additional weight of the larger dynamo, larger section bracket securing studs will be essential.

The parts required, together with prices, can be obtained from the London Service Depot.

PROCEDURE FOR FITTING THE RA-5 DYNAMO

1. Remove the existing dynamo, dynamo bracket and swivel arm.
2. Remove the existing dynamo bracket securing studs from the crankcase, (4 x ¼" B.S.F.)
3. Drill out and then tap the existing stud holes to 5/16" B.S.F. Fit the new studs supplied.
4. Bolt on the new dynamo bracket and fit the RA-5 dynamo, using the nuts and washers from the original dynamo holding bolts. Lock the bolt heads with the tab washers.
5. Fit the new swivel arm with the set in the forward position and adjust to the correct belt tension.
6. Replace the existing dynamo 'D' and 'F' to regulator 'D' and 'F' cables by the new cables supplied.
7. Remove the existing voltage control regulator and fit the new higher capacity regulator supplied.

8. Remove the front of the instrument panel, remove the existing 20-0-20 amps ammeter and replace by the new 30-0-30 amps ammeter which is supplied. (In view of the close grouping of the other electrical accessories beneath the dashboard, the car radio will require to be removed to permit access to the back of the instrument board).

The following "Parts Required" list is included as a means of guidance in checking whether the requisite spares necessary to effect this change are at hand:-

PART NO:	DESIGNATION.	NUMBER REQUIRED:
RD.3679	Dynamo, Lucas RA-5, (5")	1 Off
RE.5492	Bracket, Dynamo Assy.	1 Off
RE.6025	Swivel Arm Assy.	1 Off
RD.4073	Ammeter, 30-0-30 Amps.	1 Off
RD.4067	Pulley, Dynamo.	1 Off
RD.3277	Voltage Control Regulator.	1 Off
RD.4113	Cable, Dynamo 'D' to Regulator 'D'.	1 Off
RD.4115	Cable, Dynamo 'F' to Regulator 'F'.	1 Off
KB.400	Stud, Dynamo Bracket Securing 5/16" B.S.F.	4 Off
KB.8559	Bolt, Dynamo Securing.	2 Off
K.8807	Washer, Plain.	4 Off
KB.7107	Washer, Tab.	2 Off
K.4313	Nut 5/16" B.S.F.	4 Off
K.9009	Washer, Spring.	4 Off

HEADLAMPS

ALTERNATIVE DIPPING SYSTEM

An alternative dipping system is available as a chargeable improvement for those cars at present fitted with the pass lamp system.

The new arrangement consists of the normal "dip and switch" in which operation of the footswitch extinguishes the right-hand light and deflects the left-hand beam vertically downwards by virtue of the displaced filament in the double filament bulb. The reflector itself does not dip.

Both headlamps have double pole adaptors, but the right-hand lamp is fitted with a single pole prefocus bulb, the pole of which is wide enough to make contact with the live plunger in the double pole adaptor.

This arrangement has been adopted because it gives a very much improved illumination compared with two normal double filament bulbs in similar reflectors. Furthermore, the new reflectors themselves provide a better driving light than the original type and in addition when driving on the dipped beam, the range of illumination is a considerable improvement on the pass lamp, so that the change has less effect on visibility.

Wiring is arranged so that a simple conversion can be made to suit requirements in countries where the car is driven on the right, and double filament dipping with double filament bulbs in both headlights can also be provided by similar wiring alterations. The spare bulb supplied in the tool tray will be double pole, so that in the event of bulb failure in either lamp, the replacement will be suitable, although there will be a reduced intensity of illumination in the right-hand lamp.

All the necessary material can be obtained from the London Service Depot:-

Approximate time for conversion:- 8 hours.

FITTING INSTRUCTIONS.

HEADLAMPS & WIRING:
(Letter identifications refer to wires similarly marked in the wiring diagram.)

1. Disconnect headlamps wires from both wing valance junction boxes and remove headlamps complete with wires and P.V.C. covering.

2. Fit the new reflectors supplied and connect up as shown in the wiring diagram (A,B,L,M,K & J). In the right-hand headlamp, the dipped filament feed wire is run into the junction box but is taped up without being connected (Wire 'A').

3. Disconnect wire 'C' at the distribution board end and connect to the dip terminal on the foot-switch. Withdraw the existing wire (D) which runs between the foot-switch dip terminal and distribution board.

4. Run a new wire 'E' from the right-hand wing valance junction box to the dip terminal on the foot-switch.

   NOTE: Do not replace junction box covers, conduits etc. ntil completion of the pass lamp wiring.

PASS LAMP WIRING AND FITTING SWITCH TO FACIA BOARD:

1. Disconnect the existing wire 'P' from the distribution board and re-connect it to one of the vacant terminals in the 12-way junction box (F).

2. Remove the wooden facia panel as follows:-

   (a) Remove the three countersunk screws along the top of the panel.

   (b) Remove all push/pull switch knobs by unscrewing to the left. The rheostat switch knob is secured with a grub screw.

   (c) The facia board itself is secured by five screws of which three are along the top. Along the lower edge there are two screws countersunk into the wood. On early models, these are removed in the normal way, but on later models, they should be turned to the right to release the panel retaining clips at the back. The screws should be tested carefully to see which type is fitted. Those which should be turned to the right to release, are countersunk about one inch into the wood. The alternative type is considerably shallower.

3. Remove the Radio Set as follows:-

   (a) Disconnect aerial.
   (b) Disconnect power feed.
   (c) Disconnect bonding tape if fitted.
   (d) Remove set bolts holding the radio set.

4. Fit the switch supplied into the vacant hole in the top of the instrument panel above the switch box. If this hole does not already exist, drill as shown in Fig.1.

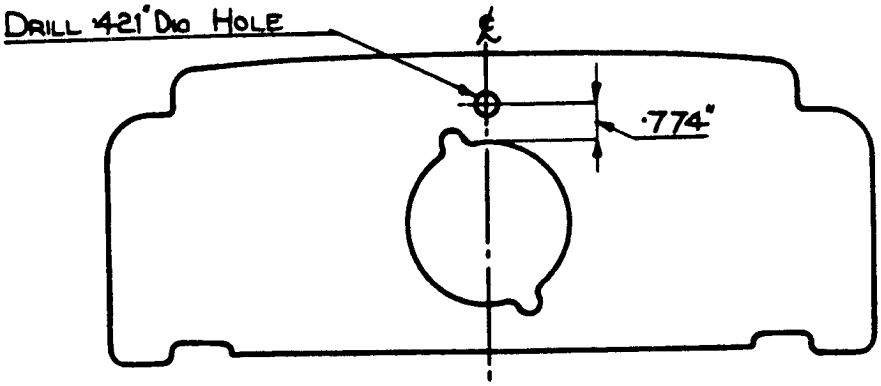

FIG. 1.

5. Drill the wooden facia panel as shown in Fig. 2.

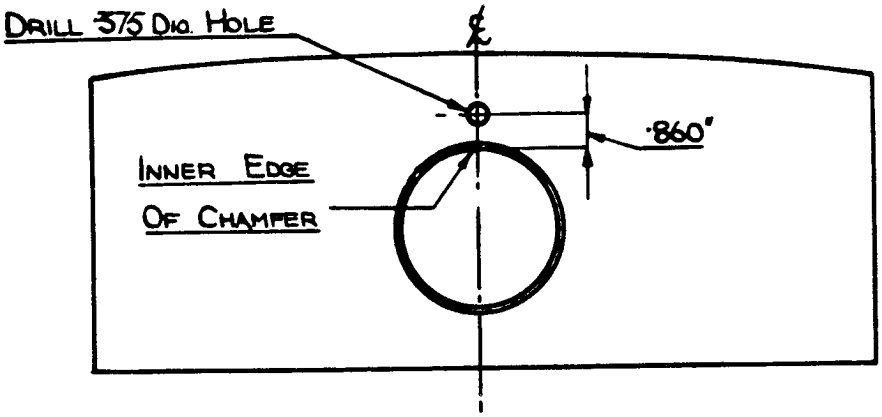

FIG. 2.

6. Run wires G & H as in the diagram and bridge the top of the side and tail light fuse to the original pass lamp fuse using RD-3096.

   NOTE: All new wires should be run through existing conduits.

7. Test headlight and pass light circuit and replace all parts which have been removed.

8. Align lamps as shown in Fig. 3.

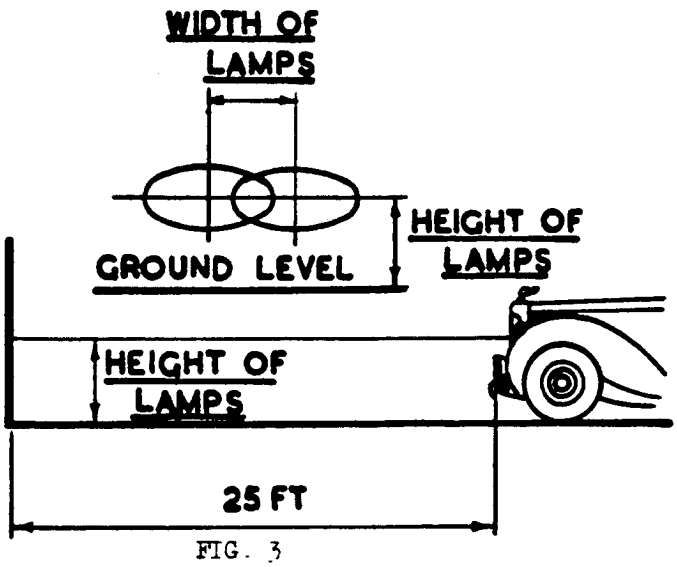

FIG. 3

CONVERSION FOR DIPPING THE RIGHT-HAND LIGHT:

1. The wire marked (A) in the diagram should be connected to the dipped filament feed terminal in the right-hand wing valance junction box.

2 Reverse the headlamp bulbs

3. Disconnect wire (P) and tape up.

CONVERSION TO DOUBLE DIPPING:

1 Connect the wire marked (A)

2 Replace the single filament bulb in the right-hand headlamp with a double filament type.

List of Parts Required for Dip and Switch Conversion:

Description:	Quantity.	Part No:
Switch (PS.7)	1	RD-6101
Reflector units	2	RD-4544
Bulb S/P S/F 48w	1	RF-4516
Bulb D/P D/F 48w/48w	2 (one spare)	RD-4561
Connecting link	1	RD-3096
3 core cable	2 (24")	RD-4647
Cable, foot-switch to R.H. junction box.	1 (67 50" Pink)	RD-4556
Cable. Pass lamp switch to 12 way junction box	1 (39 00" Black)	RD-4553
Cable, distribution board to Pass Lamp switch.	1 (49 00" Green)	RD-4555

- 5 -

All Chassis Nos: to B-193 DZ.

WIRING DIAGRAM

Conversion to dip and switch from Pass Lamp system

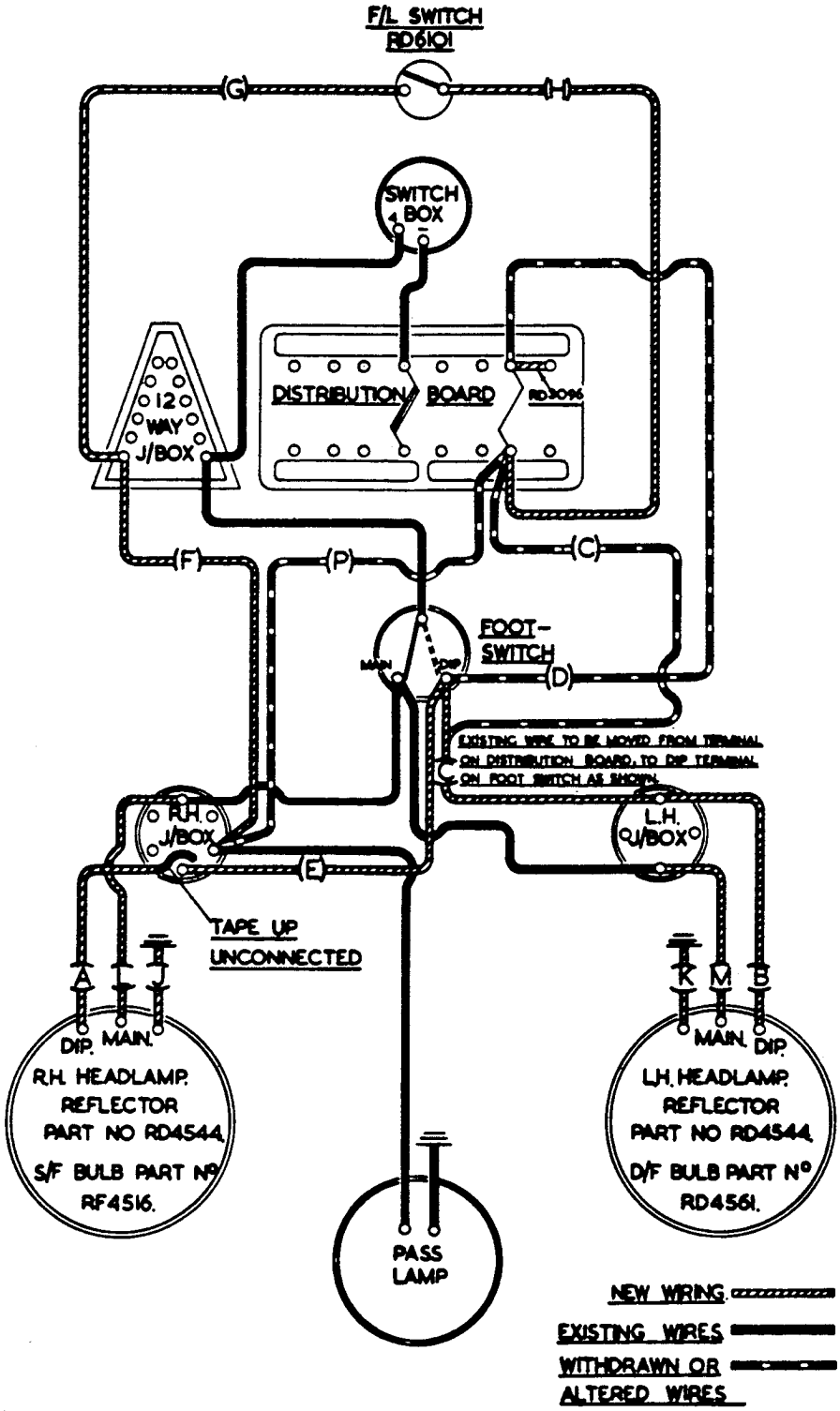

FOR INFORMATION.

AMENDMENT TO SERVICE BULLETIN BB-67

Subsequent to the publication of Service Bulletin BB-67, certain of the parts required for the conversion of the pass lamp system incorporated in earlier Bentley Mk. VI chassis to the dip and switch headlamp system introduced on current chassis have been allotted fresh piece numbers.

In addition, a complete conversion set comprising reflector and bulbs has been introduced, thus making it unnecessary to order the component parts separately as originally stated.

Will Retailers, therefore, please amend page 4 of their existing copies of this Bulletin to read as follows:-

Description.	Quantity.	Piece No.
Switch (PS.7)	1 off	RD-3450
Reflector Unit (Conversion Set c/w Bulbs)	2 off	RE-10668
Cable, Headlamp, 3-core	2 off (27")	RD-4996
Connecting Link	1 off	RD-3096
Cable, Foot-Switch to R.H. Junction Box.	1 off (67.50" Pink)	RD-4556
Cable, Pass Lamp Switch to 12-way Junction Box.	1 off (39.00" Black)	RD-4553
Cable. Distribution Board to Pass Lamp Switch.	1 off (49.00" Green)	RD-4555

FOR INFORMATION.

PETROL PUMP TESTING SWITCH.

This Service Bulletin supersedes Bulletin No.BB-68 (Section P) dated 12.5.49. reference SB/GM.1/SF, which should be destroyed.

All cars in the Bentley range are fitted with tandem petrol pumps controlled by the ignition switch to operate simultaneously when the ignition is switched on.

Many owners have expressed a preference for the three-way switch system, to which they have become accustomed as owners of pre-war Bentley cars. This allows separate operation of each pump in order that a periodic check can be made to ensure that both pumps are working satisfactorily. A three-way switch is now specified for this purpose and may be offered to owners as a chargeable improvement.

The following illustration shows the switch fitted to the facia.

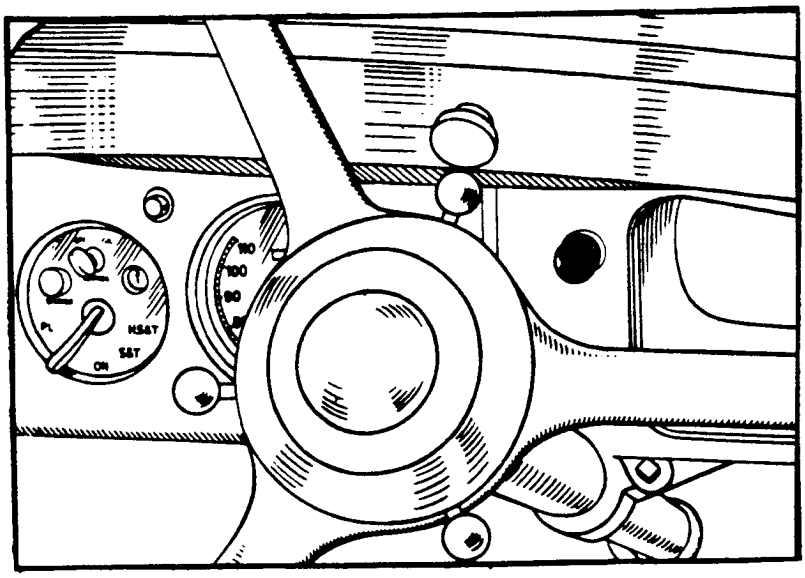

The switch position shown above is recommended to conform with the facia layout of the Bentley Mark VI. Standard Saloon. Should the

recommended position be impracticable, the location is left to the discretion of the Retailer.

The part numbers of the switch assembly, and instructions for fitting and wiring are as follows.

FITTING AND WIRING INSTRUCTIONS.

NOTE: Prior to marking off and drilling the facia, it is recommended that a check be made to ascertain whether any fittings have been positioned on the rear face of the panel, in the vicinity of the proposed location of the switch.

Providing that no such fittings have been added, proceed as follows:-

1. Mark off and drill the facia panel to the dimensions given in Fig.1.

2. Connect bridge piece (RH.303) between terminals 2 and 4 as shown in Fig.2.

3. As it is impracticable to supply a mounting bracket to suit a variety of mounting positions it is left to the discretion of the Retailer as to what method he uses to secure the switch.

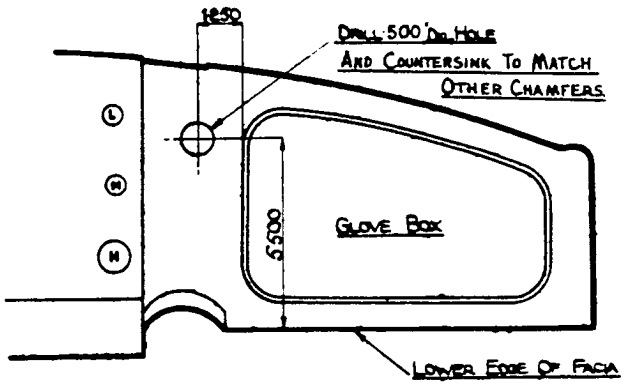

FIG.1. DRILLING INSTRUCTIONS FOR FACIA PANEL.

NOTE: It is pointed out that the flat on the switch shank should be in the upper-most position, to ensure that the "A & B" engraving is vertical in the switch central position. If it is impossible to mount the switch in this way, the location hole in the knob must be re-drilled in order to bring the knob back to the correct position.

4. Connect the positive side of Demister Switch to the main feed of the petrol pump switch (See Fig.2.)

5. Run two wires from the petrol pump switch through the metal cable conduit to the existing twelve-way junction box located immediately above the fuse box. Connect these two wires to vacant terminals.

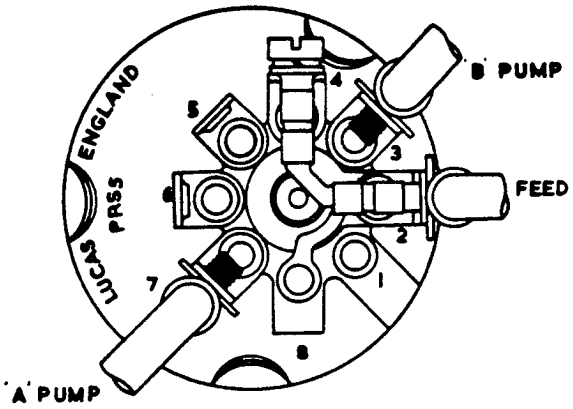

FIG.2. WIRING DIAGRAM FOR PETROL PUMP SWITCH.

NOTE: Should the twelve terminals in the junction box be already in use, an additional junction box will be required. Instructions covering the fitting and wiring of the additional junction box are given later in this leaflet.

6. Remove and discard the short length of wire fitted between the rear and front petrol pump terminals, and then disconnect the cable running from the pumps to the fuse box. Connect a length (6' 6") of new cable to each of the pump terminals, and then feed these cables through metal conduit up to the twelve-way junction box. Wire the pumps to the two terminals carrying the petrol switch connections, ensuring that the forward pump is wired to the terminal corresponding to 'A' on the pump switch and the rear pump to the 'B' terminal as shown in Fig.2.

ADDITIONAL JUNCTION BOX

FITTING AND WIRING INSTRUCTIONS

As previously mentioned in NOTE under operation No.5. the fitting of an additional junction box will be necessaryin the event of the existing twelve-way junction box being fully wired up.

Proceed as follows:-

1. Mark off and drill two 0.191" dia., i.e. 2 BA clearance, holes through the dash for the junction box retaining screws as shown in Fig.3.

2. Fit the junction box as shown, securing this in position by means of the two 2 BA x 1/2" long Cheesehead setscrews supplied.

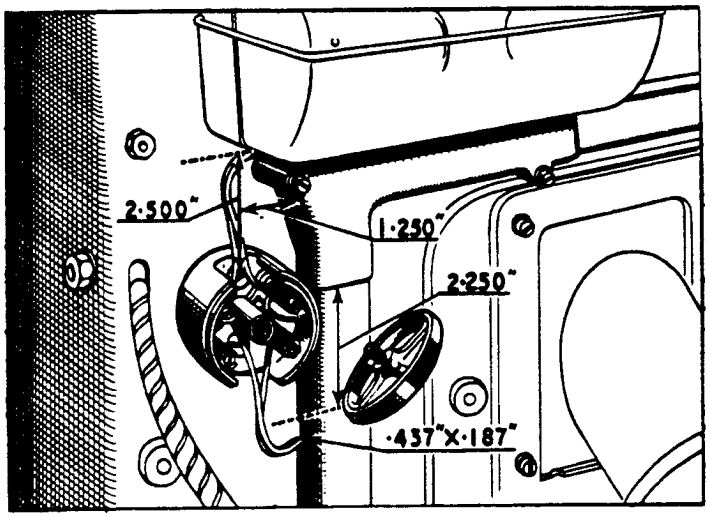

FIG.3. DRILLING AND FIXING - JUNCTION BOX.

3. Feed the two leads from the petrol pump switch through the conduit and below the fuse box, and connect up to two of the terminals in the additional junction box.

4. Cut an aperture 7/16" x 3/16" in the side of the conduit, and draw the two leads from the petrol pump terminals through this up to the junction box. Connect lead from the forward pump to the terminal carrying the "A" connection, and the rear pump lead to the terminal carrying the "B" connection from the petrol switch. Replace the junction box cover.

MATERIAL REQUIRED.

The following lists of parts cover all requirements, list "A" being the material needed when the existing twelve-way junction box is used, and list "B" the extra material required when fitting the additional junction box.

A

DESCRIPTION.	PART NO.	QUANTITY.
Switch for Petrol Pumps (Lucas)	RD.6710	1
Knob for Petrol Pump Switch	RH.194	1
Bridge Piece	RH.303	1
+Cable 16/012 P.V.C., Single Core	310/3267	18' 6"
Cables Eyes, (Petrol Pumps)	RD.3346	2
Cable Eyes, (Switches)	RD.3690	4
Sleeve, Cable Eyes	RD.7589	4
Label, Instruction	RH.309	1

NOTES: Item marked + should be cut to the following dimensions and used as stated:-

1 off length x 6" : Petrol pump switch to demister switch terminals.
x2 off lengths x 2' 6" : Petrol pump switch to junction box.
2 off lengths x 6' 6" : Petrol pumps to junction box.

Two cable eyes to be fitted to the 6" cable ONLY.

B.

DESCRIPTION.	PART NO.	QUANTITY.
Junction Box, Four-way	RD.3085	1 off
Setscrews, 2 BA x 1/2" long, Cheesehead	K. 1910	2 off
Nuts, 2 BA.	K. 4006	2 off
Spring Washers, 2 BA.	K. 9006	2 off

When fitting the above mentioned junction box, an additional 9" should be allowed to each of the two cable lengths marked x under list "A", thus increasing the total required to 20' 0".

PETROL PUMP TESTING SWITCH.

When this extra switch is fitted, Instruction Leaflet SB/1a/50 should be inserted in the Customers Handbook.

These leaflets are available, and can be obtained from the Main Service Station, Hythe Road, Willesden, N.W.10. on request.

MODIFICATION TO ISOLATE LUCAS WINDSCREEN WIPER MOTOR SWITCH WHERE FAILURE OCCURS IN SERVICE.

FOR INFORMATION:

As the wiring circuit of the Lucas Windscreen Wiper on the Bentley Mark VI employs the use of two switches, one on the instrument panel and one in the manual control of the wiper arms, it is suggested that where failure of the manual control switch occurs, this may be isolated, leaving only the instrument panel switch in operation.

PROCEDURE:

To the earth terminal of the windscreen wiper motor, fit an additional cable, about 6" long. Fit a 310/3598 .250° diameter Ross Courtney terminal to the other end of the cable and earth same by securing under one of the four retaining studs of the wiper motor support bracket.

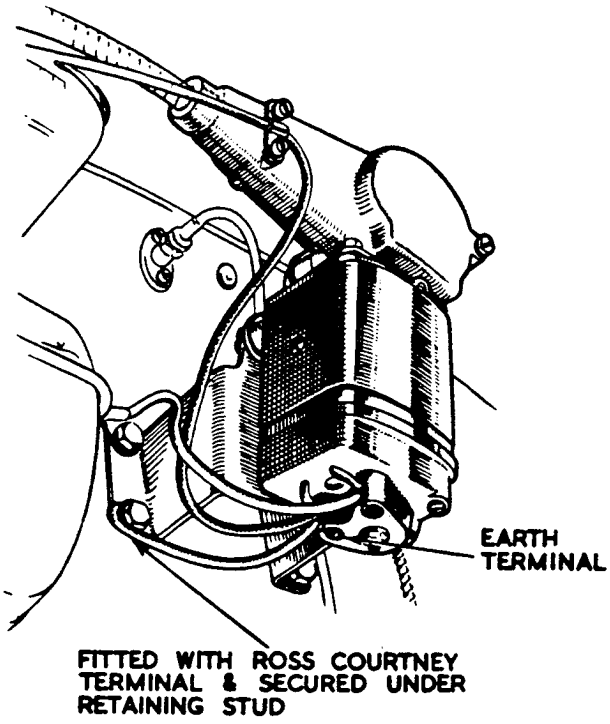

This modification will isolate the switch on the manual control of the wiper arms, but will not alter the procedure for operating the wipers, it still being necessary to lift the wiper arms by means of the large knob on the facia and to close the windscreen wiper switch on the instrument panel.

Retailers are requested to advise this Service Station of the chassis numbers of 11 cars on wh ch this modification is carried out.

MATERIALS REQUIRED.

310/3598 .250° diameter R.C. Terminal.	1 Off
Suitable Cable about 6" long.	

ALL COMMUNICATIONS TO BE ADDRESSED TO THE LANE CREWE ENGLAND

PRINTED IN ENGLAND

FOR INFORMATION:

REPLACEMENT HORN RELAY UNITS.

Retailers are advised that the Lucas C585K horn relay unit(Part No. RD-3084) as at present fitted, has been superseded by the Lucas SB-40 type unit (Part No. RD-6351), and that this is now the only replacement available.

Fig. 1 illustrates the general arrangement of the new assembly when installed on a car.

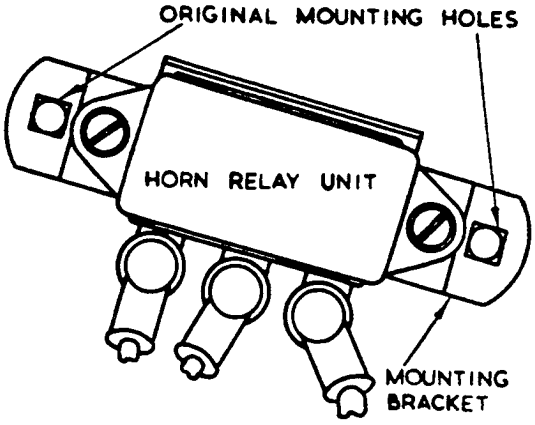

FIG. 1.

FITTING PROCEDURE.

NOTE: Due to the new replacement unit being smaller than the original type, a mounting bracket is included in order that the existing mounting holes in the valance plate may be used.

1) Remove the cover and disconnect the cable assemblies from the existing horn relay unit. Remove the relay unit from the valance plate.

2) Fit the new mounting bracket (RD-6352) to the valance plate, using the two shorter 2BA bolts supplied. Mount the replacement relay unit on to the bracket using the two 2BA cheesehead screws supplied.

3) Reconnect the cable assemblies to their respective terminals on the new relay unit.

MATERIAL REQUIRED.

RD-6351	Horn Relay Unit - Lucas SB.40	1 Off.
RD-6352	Mounting Bracket - Horn Relay to Valance Plate.	1 "
K. 101/Z	Bolt, 2BA - Mounting Bracket to Valance Plate.	2 "
K.9006/Z	Spring Washer, for above.	2 "
K.4307/Z	Nut, 2BA for above.	2 "
K.1901/Z	Screw Ch. Hd. 2BA - Horn Relay to Bracket.	2 "
K.9006/Z	Spring Washer for above.	2 "

FOR INFORMATION:

ALTERNATIVE SPARKING PLUGS.

Will Retailers please note that the K.L.G. Type FE.60, 14 m/m non-detachable sparking plug has now been approved as an alternative fitting for all Bentley Mk.VI engines.

The amended list of recommended alternative sparking plugs should read as follows:-

Champion Type N.8.	14 m/m non-detachable.
K.L.G. Type FE.60.	
Lodge Type CLN.	

The existing instructions covering plug servicing remain unaltered.

FOR INFORMATION:

FITTING OF REPLACEMENT AERIAL LEAD-IN.

(BENTLEY MK.VI STANDARD SALOON)

The following information covers the procedure to be adopted should it be necessary to fit a replacement aerial lead-in on a Bentley Mk.VI Standard Steel Saloon in service.

PROCEDURE.

1. Remove the driving mirror, roof aerial, sun visors, windscreen wiper control knobs and trafficator switch lever.

2. Remove the scuttle rail trim (or panel, if fitted) from below the windscreen finisher.

3. Remove the two 1/4" B.S.F. nuts and washers retaining the grab-handle on the L.H. side of the scuttle rail, and withdraw the handle. Remove the single 1/4" B.S.F. nut and washer securing the R.H. side of the scuttle rail, also the eight chrome screws holding the windscreen finisher in position, and carefully withdraw the finisher, freeing the top edge first.

4. Slide back the sunshine roof and remove the screws from the three brackets retaining the front of the sunshine roof aperture finisher in position. Lift the front of the finisher sufficiently to expose the tacks holding the header fabric in position, and then remove these for the width of the finisher.

5. Unscrew the rear blind slider mounting above the R.H. front door and allow it to hang loose.

6. Using a thin-bladed screwdriver, lever up the fabric covered fillet above each of the front doors as far back as the centre door pillars. Remove the tacks from the sides of the header lining fabric and fabric covered rubber draught excluder to a distance of eight inches back from the top of the windscreen.

7. Starting from the front, gently pull the header lining free from the curved plywood, or hardboard fillet which it covers until the complete fillet is exposed. Remove the counter sunk metal thread screws which secure the upper and lower edges of this fillet, (these will be found to have their heads covered with a hard brown compound which can readily be removed with a fairly sharp thin-bladed screwdriver), remove the pins, if fitted, securing the upper side of the fillet, and then the fillet.

8. Remove the rubber hose connection situated at the top corner of the junction between the windscreen frame and R.H. screen pillar. Remove the R.H. inner scuttle trim pad, also any clips which may be found securing the aerial connector lead and disconnect the faulty lead from the radio and aerial contact block respectively.

NOTE: If the replacement lead-in has a right angle plug at its radio end, a length of copper wire should be secured to the aerial end of the lead which is being withdrawn.

9. Remove the existing lead-in by gently withdrawing it from the BOTTOM of the R.H. screen pillar. It is of the utmost importance that no force is used during this operation, otherwise the lead may jam between the walls of the pillar and the drain tube, becoming impossible to free. In the event of any seizure becoming apparent, the lead should immediately be freed by pushing it back, at the same time twisting it.

10. Fit the replacement lead-in as follows:-

    a) If the plug-jack at the radio end of the new lead is of the straight type, connect the lead to the aerial contact block on top of the screen pillar, and then feed the other end of the lead carefully DOWN the pillar, (withdrawing it slightly and twisting it whenever any stricture becomes apparent) until a sufficient length has been passed down to enable it to be pulled through from below the pillar. Connect up to the radio and test out.

    b) If the plug jack at the radio end of the new lead is of the right-angle type, connect this to the radio, attach the other end of the lead to the lower end of the copper wire which has been drawn through the pillar, and feed the lead carefully UP the pillar, withdrawing it slightly and twisting it whenever any stricture becomes apparent. When the aerial jack appears at the top of the pillar, connect up to the aerial contact block. and test out.

    NOTE: To ensure good contact, it is recommended that the aerial block contacts are raised slightly prior to connecting the replacement lead.

11. Refit the lead securing clips, rubber hose connection and header panel fillet (the screw heads should be covered again, using either plastic wood or cellulose stopper for the purpose). Refit the header fabric, using Dunlop upholstery solution or some similar rubber based adhesive. Refit the rubber draught excluders, side trim pads and rear blind catch mounting. Refit the windscreen finisher, and if fitted, the leather covered trim pads, (this may be somewhat facilitated by the use of soap as a lubricant on the trim pads. Refit the screen wiper control knobs, trafficator switch lever, driving mirror, aerial, sun visors and scuttle rail trim.

FOR INFORMATION:

REPLACEMENT IGNITION CONDENSERS

The ignition condenser (Delco-Remy Type DRH.1386, Part No.RD.6258) hitherto fitted on all chassis in production has been superseded by the improved DRH.8859 type unit, which is now the only replacement available.

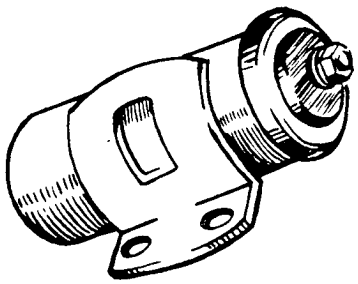

FIG.1. DRH.1386 CONDENSER
(Original Fitting)

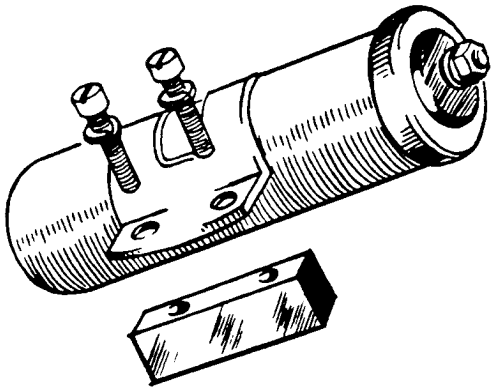

FIG.2. DRH.8859 CONDENSER
(Current Replacement)

Although the new type condenser is interchangeable and is fitted on the distributor in a similar manner to the original unit, it will be observed from the above illustrations that a distance piece is also included. This is due to the difference in the relative angular setting of the mounting bracket.

The piece number for the new assembly is R.4481, and the kit includes the distance piece, longer setscrews, spring washers and connecting strip.

FOR INFORMATION

REAR WINDOW DEMISTER

The Bentley 'R' Type is fitted with an electric demister incorporated in the rear window glass and controlled by a push pull switch marked RW on the facia. Rear windows of this type are now available for fitting to earlier models as a chargeable improvement at an owners request and this Bulletin set outs details of the fitting and wiring procedure.

FITTING INSTRUCTIONS.

(i) Remove the screws securing the wooden finisher on the inside of the rear window and remove the finisher. Remove the glass by pressing it inwards from the outside.

(ii) Fit the new rubber seal to the new glass ensuring that the terminal leads from the internal wiring are on the inside. The leads are fragile and should be handled carefully. After fitting the rubber seal, stick the leads to the inside of the glass with a protective covering of cellulose tape until the glass is finally fitted.

(iii) Press the new glass evenly into position; do not fit the bottom edge first so causing the top to be forced into position. Fit squarely, using small levers between the glass and the body if necessary. Refit the finisher, loosely fitting the securing screws along the bottom, then along the top and sides. Tighten the screws sufficiently to press the rubber seal against the body. From outside the car, ease the rubber seal over the lip of the window aperture with a blunt chisel or screwdriver. Fully tighten the finisher retaining screws.

(iv) Owing to possible variations in the curvatures of the glass and the body, additional packing may be required to ensure a sound seal. Raise the outside edge of the rubber seal and check whether the glass is fitting snugly; if not, remove the glass and pack the inside edge of the body, where necessary, with strips of Prestick. Refit the glass.

WIRING INSTRUCTIONS.

The recommended position for the RW switch is on the centre line of the facia about $\frac{3}{4}$" above the master switch, where an existing hole in the steel instrument panel, behind the facia, may be utilised (Fig.1).

On some early chassis this position is used for the pass lamp switch and the new RW switch should be mounted on the wooden facia board to the right as shown in Fig.1. An additional mounting bracket and connections are necessary as shown under MATERIAL REQUIRED.

(i) Remove the wooden facia panel as follows:-

(a) Remove the three countersunk screws along the top of the panel.

(b) Remove all push-pull switch knobs by unscrewing to the left. The heater rheostat switch is secured by a grub screw, and on later chassis, where the three position heater switch is fitted, by a spring loaded catch which must be depressed before pulling off the knob.

(c) Remove the two countersunk screws along the lower edge of the facia. On later models these screws should be turned to the right to release the panel retaining clips at the back. The later type are countersunk about one inch into the wood. The countersinking of the earlier type is considerably shallower.

(ii) Remove the Radio Set as follows:-

(a) Disconnect the aerial plug and the power feed.

(b) Disconnect the bonding tape, if fitted.

(c) Remove the four set screws retaining the set to its mounting bracket.

On later series the loud speaker is a separate unit and is mounted on a baffle plate alongside the steering column. The baffle plate is secured to a bracket on the column and an angle bracket on the floor and should be removed. The lead to the speaker is plugged into the top of the power unit.

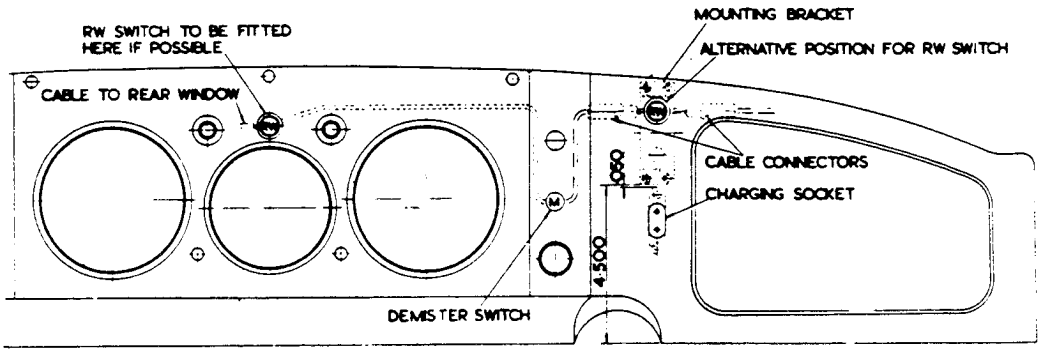

FIG.1.

(iii) Fit the RW switch to the centre vacant hole in the instrument panel or fit the bracket and switch to the right as shown in Fig.1.

(iv) Connect a cable from the RW switch to the live side of the demister switch M. Lead the cable from the RW switch through the main wiring harness, where a suitable hole can be made in the P.V.C. tubing, through the dashboard and under the wiring harness conduit below the distribution board. From there the wire should follow the main loom, in a separate P.V.C. tube down the face of the dash, and on as far as the rear wheel arch, being strapped to the loom at regular intervals.

(v) Drill a ¼" (6.3 mm) hole through the petrol filter shield and lead the wire up through the box casing at the front of the spare wheel compartment and through the existing ¼" hole in the top of the casing near the off-side wheel arch. Follow the angle of the boot wall and body and pass the wire into the boot through a ¼" dia. hole drilled in the floor where the squab and body meet.

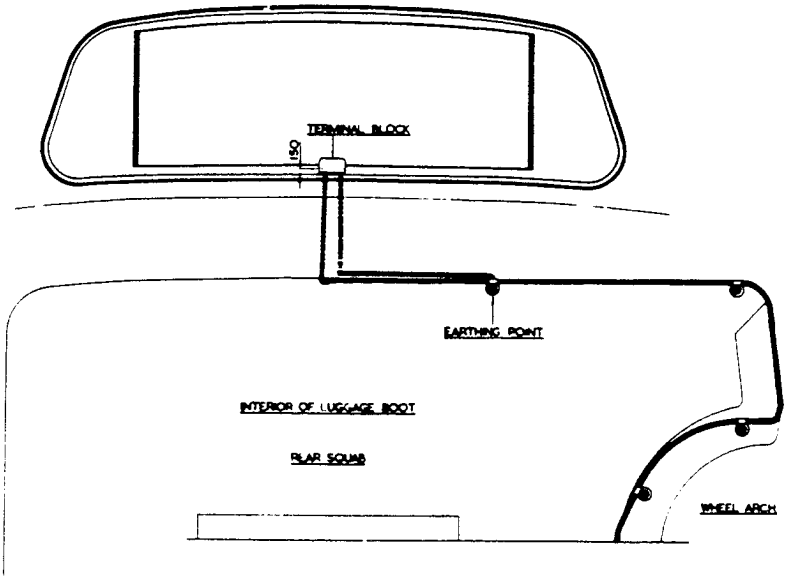

FIG.2

(vi) Anchor the cable to the squab screws following the line of the boot as shown in Fig.2 and enclosing the cable in P.V.C. tube.

(vii) Drill two .218"dia.(5.5 mm) holes one on each side of the centre line, 1" between centres, through the rearmost sloping portion of the parcel shelf. Stick the terminal block to the rear window with Durafix symetrically across the centre line and approximately .150" (3.01 mm) above the top edge of the wooden finisher. When secure attach the demister terminals and the feed wire. Connect a short earthing cable from the terminal block to the centre screw on the top of the rear squab (Fig.2).

(viii) Drill a .324" (8.23 mm) dia. hole in the wooden facia to take the RW switch knob and refit the facia.

(ix) Refit the wireless.

MATERIAL REQUIRED:

			No.off
	RB.7413	Rear-window Demister Glass	1
	RB.6160	Seal Strip - Rear-window	1
	RB.5927	Terminal Block Assembly	1
	RB.7415	Terminal Cover - Terminal Block	1
	RB.7416	Screw - Terminal Cover	1
	K.4301/Z	Nuts - Terminal Block	2
	K.9003/Z	Washer - Terminal Block	2
	RD.3406	Cable Eye 5BA - Terminal Block	2
	R.4815	R.C. Terminal No.11 - Cable Fixing	5
	330/2890	Clip - Cable to Boot	1
	F.59140	Strap - Cable to Main Loom	12
	RD.6636	Switch RW - Push Pull	1
	310/3267	Cable - Switch to Rear-window	25 ft.
		P.V.C. Tube 5 mm	10 ft.
		Durafix - Terminal block to window	As required.
A.	RD.6633	Bracket - Switch to Facia Board	1
A.	RD.4524	Screw - Bracket to Facia Board	2
A.	RD.5745	Benjamin Type Connector - Male	2
A.	RD.5746	Benjamin Type Connector - Female	2

A. Only required when RW switch is fitted on side of Facia Board.

These parts are available on request from the London Service Station.

FOR INFORMATION:

SPARKING PLUGS

THE BENTLEY CONTINENTAL SPORTS SALOON

As a result of tests carried out on the Bentley Continental engine it has been decided to increase the heat range of the sparking plugs.

In future, all replacement plugs fitted should be Champion NA8 and not Champion N8 as at present specified.

FOR INFORMATION:

SMITH'S AUTOMATIC CIGAR LIGHTER

In the event of the failure of the cigar lighter element, it should be noted that this failure may not always be due to a fault in the element itself.

It is probable in many cases, that the setting of the three bi-metal retaining clips is at fault, and thus the replacement of the element alone, is not in itself enough to ensure further satisfactory operation.

In order to avoid unnecessary cost to the owner by replacing the complete lighter unit, the following procedure should be adopted where a failure of the element is reported.

1. Remove the element and knob assembly from the dashboard fitting, and dismantle by screwing out the element.

2. Screw in a new element and replace the assembly in the dashboard fitting.

3. Push in the knob, and, with a stop watch, time the period it takes to disengage. This should be 4 - 6 seconds after pushing in the knob.

   NOTE:- Do not allow the knob to remain engaged more than 8 seconds, if this happens, pull out the knob and element assembly at once.

   If adjustment is necessary, ensure that the Master Switch is "OFF", then, with a small screw-driver, very carefully lever outwards the three bi-metal clips in the dashboard fitting, taking care to apply equal pressure to each clip.

   Re-check release time, if necessary, continue adjustment of clips until a release time of 4 - 6 seconds is obtained. When timing the release, always do so with a cold element, otherwise a false reading can be obtained.

   NOTE:- The melting point of the element coil is 1300°F. This temperature can be reached after only 12 seconds engagement, so that a time of 8 seconds must not be exceeded under any circumstances.

Retailers should advise customers who have experienced element failures, that in no circumstances should the knob be pushed in and retained by hand. This has been put forward by the makers as the most frequent cause of failure. To avoid the possibility of damage the lighter must always be allowed to release itself automatically.

CANCELS BB.185 dated 9.4.54.

SPARKING PLUGS

It is emphasised that the correct types of sparking plug for Bentley post-war engines are as follows:-

Mark VI and 'R' Type	:	Champion N8B
Continental Sports Saloon	:	Champion N48

The N48 plug is only suitable for the Bentley Continental engine and will almost certainly lead to misfiring if fitted to the other models.

Retailers are asked when carrying out service schedules or repairs particularly to check that the correct plugs are fitted.

FOR INFORMATION.

BENTLEY CONTINENTAL SPORTS SALOON

DISTRIBUTOR-OIL LEAKAGE

The tachometer drive on the Bentley Continental engine is taken from the distributor housing, the gears being fed with oil from the low pressure circuit via an external pipe. Oil leakage has been experienced from under the distributor clamping plate.

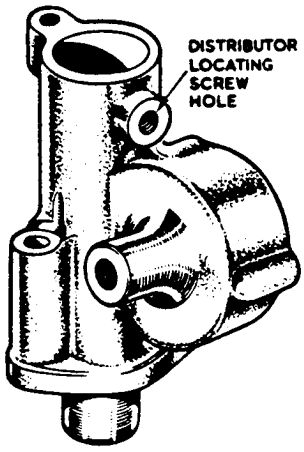

DISTRIBUTOR HOUSING
FOR THE BENTLEY CONTINENTAL

Since the locating screw for the distributor is not necessary with this type of housing a rubber sealing ring, Part No.KB.6206, was fitted to the locating groove on the distributor shank and the screw shortened. Further experience, however, has shown that the edge of the tapped hole for the screw can cut the rubber ring and destroy the seal. Until supplies of a new housing without the locating screw hole, Part No.RE.21976, are available, an aluminium blanking plug is being screwed in on production and machined off flush with the bore.

Retailers are advised that a complaint of oil leakage from the distributor should be met by fitting the rubber sealing ring and an aluminium blanking plug. The locating screw hole is tapped .250" dia 26 threads per inch, right hand, Whitworth form. The inner end of the plug should be filed or machined flush with the bore.

FOR INFORMATION:

SPARKING PLUGS

BENTLEY "CONTINENTAL".

Champion N.8-B plugs are no longer approved for use on the Bentley "Continental", and are superseded by Champion NA-8. The former should be exchanged for the NA-8 when cars come in for normal servicing, and cost of the plugs charged to the Company, if the mileage is 10,000 miles or less.

Lodge CLNP are also approved and should be recommended to owners whenever possible, on account of their longer life and higher resistance to misfiring. They are, however, considerably more costly, and if fitted, are chargeable to the Owner.

Cancels BB-202 dated 17.11.54.

FOR INFORMATION AND ACTION.

FLASHING DIRECTION INDICATOR LIGHTS.

This Bulletin is re-issued to ammend the Part Number of the Scintilla Flasher Unit required. Copies of the Service Bulletin of the same number dated 17.11.54 should be destroyed.

By international agreement the flasher filament in single or double filament bulbs for flashing Direction Indicator Lights will be of 21 watts rating. All replacement bulbs will be supplied to this rating.

The majority of Bentley cars with flashing indicators have been fitted with 18 watt flasher bulbs and a Scintilla Flasher Unit rated at 36 watts although on some chassis the flasher unit may be marked 50 watts. If replacement 21 watt bulbs are fitted with a flasher unit of 36 watts, the flashing rate may be reduced below the standard of 90 to 120 flashes per minute.

Retailers are advised, therefore, that it is necessary to check the flashing rate after a new bulb, or bulbs, have been fitted. If below standard, a new Scintilla Flasher Unit rated at, and marked 36/42 watts should be fitted. This unit will operate correctly with either 21 watt or 18 watt flasher bulbs and may therefore be used to replace a faulty flasher unit where the existing 18 watt bulbs are still serviceable.

It will be appreciated that owners may change flasher lamp bulbs themselves and later complain of slow flashing.

Parts Required.

RD.8383 Scintilla Flasher Unit 12V - 36/42 W. 1 Off.

FOR INFORMATION:

MARK I HEADLAMPS.

Early Series Bentley Mark VI cars, from commencement of production to Chassis No.B-191-DZ, were fitted with Mark I Headlamps, Part No.RD.3970.

Later Series, from Chassis No.B-193-DZ to B-167-NY, were fitted with modified Mark I headlamps, Part No.RD.4544. These lamps had a shallower reflector unit fitted with a thicker glass which required a wider inner rim.

The later lamp and the shallow type reflector unit are now the only available Mark I headlamp replacements.

The shallow type reflector unit can be fitted to the early Mark I lamp, provided a new inner rim and back shell adaptor are also fitted. Where it is required to replace one early type reflector unit, both lamps should be modified to the later pattern in order to maintain appearance. The following parts are therefore required:-

RD.5394	Reflector Unit Assembly.	2 off.
RD.6197	Adaptor - Back Shell.	2 off.
RD.7526	Inner Rim.	2 off.

Similarly, where one early type lamp is to be replaced complete, the other lamp should be modified by fitting a shallow type reflector to match. 1 off of each of the parts listed above are therefore required in addition to the new headlamp assembly RD.4544.

FOR INFORMATION AND ACTION.

IGNITION TIMING

BENTLEY CONTINENTAL - 3¾" BORE ENGINE.

The fully-retarded, static ignition timing for the 3¾" bore engine fitted to the Bentley Continental Sports Saloon in D Series and onwards is to be altered from 2° B.T.D.C to 3° AFTER T.D.C.

Experiments have shown that the advance curve of the distributor timed at the old setting gives an excessive advance at the middle speed range which can lead to a 2% power loss at these speeds. The new setting of 3° AFTER T.D.C gives no power loss and is satisfactory at all speeds.

Retailers are asked to take the opportunity to re-time the ignition when a car is in the Service Department for other work or if there is any complaint of loss of power. Instructions for ignition timing are given in Section P of the Workshop Manual. The 3° LATE mark on the flywheel should be used.

It is emphasised that this alteration applies to the 3¾" bore engine fitted to the Bentley Continental only.

FOR INFORMATION.

IGNITION COILS

In order to ensure adequate supplies, Ignition Coils manufactured by Delco-Remy Ltd. have been approved for alternative use on all post-war Bentley cars.

The London Service Station may therefore despatch either a Lucas or a Delco-Remy coil of the appropriate type in response to a replacement order.

The terminals on Delco-Remy coils are marked '+'(positive) and '-' (negative). On Bentley Mk.VI and 'R' Type cars, where a positive earthing system is employed, the '+' terminal should be connected to the contact breaker and the '-' terminal to the switch. On the Bentley 'S' Type, which has a negative earth system, the '-' terminal should be connected to the contact breaker and the '+' terminal to the switch.

The terminals of Lucas coils are marked 'CB' and 'SW' and should be connected accordingly.

FOR INFORMATION.

MICRO SWITCHES.

It is possible for starter motor micro-switch to be rewired incorrectly, i.e., in such a way that the circuit is not closed when the gear change lever is in the neutral position.

A diagram of the switch connections is given below.

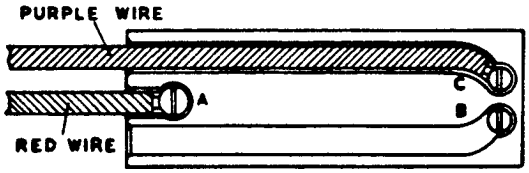

STARTER OVERIDER MICRO SWITCH WITH
LOWER COVER REMOVED.

The 'red' wire (from the main switch box) should be connected to terminal 'A', and the 'purple' wire to terminal 'C'.

The terminals are clearly marked, and terminal 'B' should be ignored.

FOR INFORMATION.

TWO SPEED WINDSCREEN WIPER ASSEMBLIES.

There is, at present, a number of two speed windscreen wiper motor assemblies which differ only in respect of the length of rack attached to the motor.

In order to simplify the ordering of spares, and to reduce the number of assemblies stocked, it has been decided to list the motors and racks separately.

The part numbers of the motors and racks are as follows:-

Description.	Lucas Part No.	Rolls-Royce Part No.
Motor	75186, 75249	CD. 572.
	(used where both wiper blades operate in unison).	
Motor	75181, 75250	CD. 573.
	(used where wiper blades operate counterphase).	
Rack (length 51.25")	-	CD.224
Rack (length 55.25")	-	CD.574
Rack (length 47. 9")	-	CD.575
Rack (length 61.00")	-	CD.576

The rack length is measured from the eye of the rack crosshead to the extreme end.

These parts, which can be identified by examination, should in future be ordered separately.

FOR INFORMATION.

THE LUCAS IGNITION COIL AS AN ALTERNATIVE REPLACEMENT.

It has been decided to introduce a Lucas ignition coil as an alternative to the Delco-Remy coil. It is important that this is correctly connected, as otherwise, due to the fixed polarity of the coil, loss of efficiency and consequent misfiring will occur. It is also essential that the cable eye is locked to the terminal block to obviate the "spannering" effect of the stiff cable, which will otherwise result in the nut loosening and eventually falling off.

CONNECTING THE LUCAS COIL.

The light blue cable from the loom is to be connected to the "SW" terminal and the dark blue cable, which comes from the ignition harness tube is to be connected to the "CB" terminal. The black cable from the suppressor condensor is to be connected to the "SW" terminal.

CORRECT SEQUENCE OF ASSEMBLY AT THE TERMINAL.

To ensure that the cables do not work loose, the cable eyes are to be locked to the body of the coil by assembling on the terminal first the shakeproof washer, next the cable eye, and where pertinent, the suppressor condensor cable eye, followed by the plain washer and finally the knurled nut.

IDENTIFICATION.

The Lucas Ignition Coil Part No. UD.1984 can be identified by a transfer which states "For use with POSITIVE Earth System only".

Lucas coils other than the ones bearing this transfer should not be used.

CHASSIS NOS:

Bentley Mark VI and "R" Type Saloon.

FOR INFORMATION.

DIRECTION INDICATOR SWITCHES.

In future, "Scintilla" instead of "Trico" direction indicator switches will be supplied for replacement purposes.

Credit will no longer be given for "Trico" switches removed from the car, and reference to them should be deleted from the circular letter dated 28th December, 1956, which gave their replacement price as 16s.3d.

The full retail price for "Scintilla" direction indicator switches is £1.17s.6d.

MATERIAL.	PART NO.
Scintilla Direction Indicator Switch	RH. 118.

FOR INFORMATION.

ELECTRIC AND WINDING CLOCKS.

The Winding Clock, part number RD.3184, fitted into the door of the cubby box in the main instrument facia panel is no longer available. A scheme has therefore been introduced to enable installation of the electric clock, part number RD.5732, in lieu of the winding clock, should replacement be necessary.

Remove the winding clock. Fit the electric clock into the recess, using one of the existing location screw holes; drill new holes for the remaining screws. Connect up the circuit, encorporating the special wiring loom provided, part number RD.5721, as shown in the diagram. Cut a hole in the right hand front corner of the cubby box interior to allow the loom passage through under the facia to connect up with the appropriate terminals.

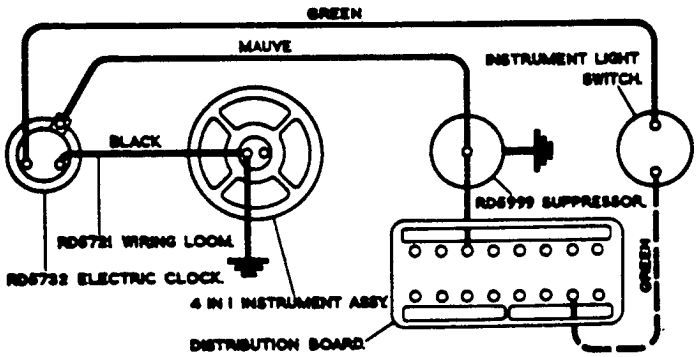

Material Required.

Electric clock.	Part No. RD.5732
Wiring Loom	Part No. RD.5721.

This Bulletin cancels all previous bulletins.

FOR INFORMATION

WINDSCREEN WIPER MOTORS

A new wiper motor (DR.3. type) is now being fitted to current production cars and by reason of its greater torque output and modified design, is an improvement on the DR.1. type motor which was fitted previously.

A normal wiping speed of 35 - 40 cycles and a fast speed of 50 - 55 cycles is available with the new motor.

Installation on current production cars has been altered necessitating a reduction in the length of the first run of bundy tubing and also the use of a shorter rack.

A special mounting plate has been designed to enable the DR.3. type motor to be fitted for replacement purposes on cars previously equipped with the DR.1. type, without any alteration to the bundy tubing or rack being necessary.

To fit a DR.3. motor in place of DR.1. type, follow the procedure given in this bulletin.

Material required.

1 Wiper motor assembly	Part No. RH.712.
1 Connector	Part No. RD.6932.
1 Connector	Part No. UD.1806.
9 Terminals	Part No. RD.3425.
5 Feet Cable (red)	P.V.C.16/012.
1 Connector	Part No. RD.7050.

Disposal of material

When a DR.3. type wiper motor is fitted to replace a DR.1. type, return the DR.1. motor to Hythe Road for credit.

INSTRUCTIONS FOR FITTING DR.3. TYPE WIPER MOTOR IN PLACE OF DR.1. TYPE.

To remove the DR.1. wiper motor

Unscrew the four screws and remove the cover from the wiper motor.

Remove the circlip, which retains the connecting rod followed by the plain washer, conical spring and shaped washer (see fig. 1); care should be taken when removing the conical spring as it is under compression.

Lift the connecting rod to disconnect it from the crosshead, then withdraw the crosshead and bundy tubing from the motor.

Refit the connecting rod to the gear wheel followed by the shaped washer, conical spring, plain washer and circlip.

Refit the cover and secure it to the motor with the four screws.

Continued.....

Unscrew the three nuts securing the motor to the mounting bracket on the dash and detach the motor.

Disconnect the bonding braid and the five cables from the motor, cut off the terminals from the five cables and in their place fit a ferrule for a snap connector.

Detach the triangular mounting bracket from the wiper motor by removing the two 2 BA screws.

To fit DR 3 Wiper Motor.

Attach the triangular bracket to the mounting plate, supplied with the new wiper motor, by means of two 2 BA screws.

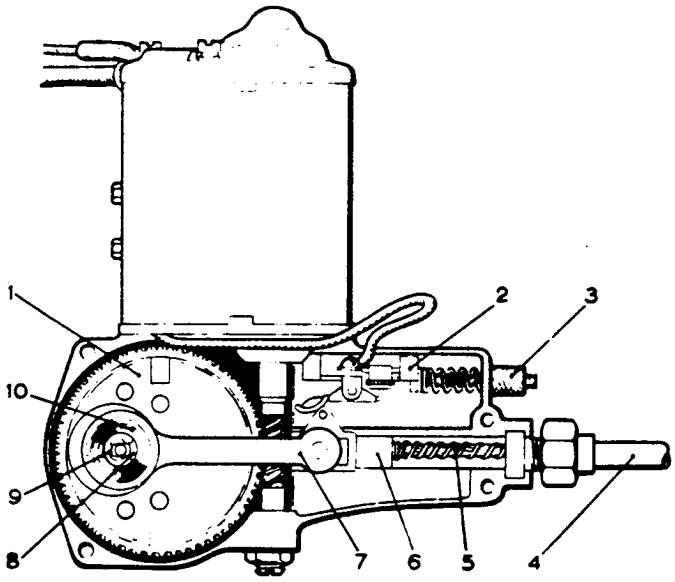

Fig.1. DR 3. Type windscreen wiper motor.

1. Gear wheel.
2. Self-parking switch.
3. Adjusting nut.
4. Bundy tubing.
5. Cable rack.
6. Crosshead.
7. Connecting rod.
8. Plain washer.
9. Circlip.
10. Conical spring.

Cont'd.....

Fit the new motor (DR 3) to the mounting plate and secure it with the three 2 BA screws; secure the black earth wire from the motor and the bonded braid to the mounting bracket by means of one of the fixing bolts.

Fit the assembly to the bracket on the dash and secure the mounting plate with the three nuts.

Fit the crosshead to the motor by reversing the procedure adopted when removing it from the old motor.

Connect the five cables to those on the dash (see table).

Connect the cables on the new motor to the cables on the loom as follows:-

Cable on motor colour		Cable on loom colour
Brown	to	Pink
White	to	Dark Blue
Red	to	Grey
Orange	to	Purple
Green	to	Red (New feed)
Blue	to	Light Blue

To fit new feed cable.

It will be necessary to remove the facia to facilitate access to the wiper switch.

The original feed cable to the wiper motor and also the feed cable to the petrol gauge (both light blue) are connected to No. 2 terminal on the wiper switch; disconnect these cables from the switch and fit them to the double connector (UD.1806).

This connector should be fitted behind the facia adjacent to the wiper switch.

Connect one end of the new feed cable (red) to the double connector; fit a terminal for a snap connector to the free end and connect to the motor (see table).

Secure the new feed cable to the loom with insulation tape.

EXCESSIVE LEAKAGE OF OIL AT THE CENTRE STEERING LEVER AND STUB AXLES (CENTRALISED CHASSIS LUBRICATION SYSTEM).

FOR INFORMATION:

The information contained in this Bulletin will be of assistance to Retailers, in the event of complaint being received of excessive leakage of oil at the centre steering lever pivot assembly and the stub axles, leaving a pool of oil on the ground after the car has stood for several hours or overnight.

CAUSE:

When the pedal of the chassis oil pump is operated, a relatively large quantity of air is trapped in the three ball joints connected to the centre steering lever and compressed. During the next few hours, the trapped air expands, pushing the oil along until it escapes past the fulcrum pin bearings of the centre steering lever pivot assembly and the bearings of the stub axles.

REMEDY:

The cure lies in packing the four joints of the cross steering tubes and the ball joint at the front end of the side steering tube with a soft type of grease such as Duckham's HBB grease in order to displace the air.

It should be noted that the Chassis Oil Pump develops sufficient pressure to clear the oil feed pipe on the centre steering lever clear of grease.

TO REMOVE THE BALL JOINT AT THE FRONT END OF THE SIDE STEERING TUBE FROM THE CENTRE STEERING LEVER, PACK WITH GREASE AND REFIT

(i) Remove the front right-hand undershield. Jack up front wheels and turn wheels to full right-hand lock.

(ii) Remove split pin and nut from ball pin.

(iii) Place a substantial steady block in contact with the lever near the ball pin to be removed, in order to provide a solid re-action point, and then with the aid of a large steel drift and hammer, give the eye of the lever (adjacent to the ball pin) one or more sharp blows which will release the tapered shank of the pin from its location in the lever. NOTE: The above method applies to all the ball joints to be removed.

(iv) Collect the pressure spring and the sealing disc.

(v) Remove the cap nut of the joint (see Fig.1) and completely pack the joint with grease.

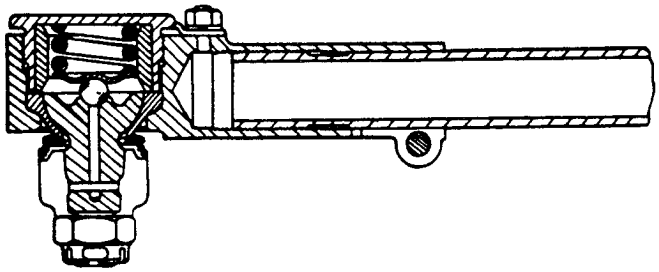

Fig.1. Section through ball joint at front end of side steering tube.

(vi) Before refitting the ball joint (ball pin) to the lever, clean the tapered shank of the pin and corresponding hole. With the sealing disc and pressure spring in position on the pin and the correct way round (See Fig.1), refit the ball pin to the lever, fully tighten up the nut and secure with a new split pin of the correct size. NOTE: Do not use a hammer when refitting the ball pin to the lever, but rely on tightening the nut to draw the mating parts together. Treat the four ball joints of the cross steering tubes in a similar manner. Fig.2 shows a section through a ball joint (outer) of a cross steering tube. Finally inspect that no split pins, locking plates and spring washers have been omitted.

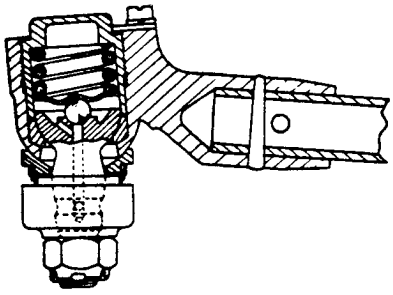

Fig.2. Section through a ball joint (outer) of a cross steering tube.

OIL LEAKAGE FROM THE BEARINGS AS FITTED TO THE LOWER END OF EACH OF THE YOKES AND THE OUTER END OF EACH OF THE LOWER TRIANGLE LEVERS.

It is also possible that a leakage of oil may occur past the above mentioned bearings, therefore the opportunity should be taken to remove the Z 8000/102 Elbow meter Valve (2 off) situated at the front and outer end of each of the two lower triangle levers and replace them by two Z 8000/101 Elbow meter Valves, thus reducing the oil feed to the bearings. Later chassis are fitted with the Z 8000/101 type restrictors (Elbow meter Valves).

CATEGORY 1 ACTION:

LOWER REAR SPRING PLATES.

Retailers are advised that a new type of strengthened rear spring plate for the shock damper linkage attachment has been introduced on current models in production. This supersedes the earlier designs fitted and is now the only replacement available.

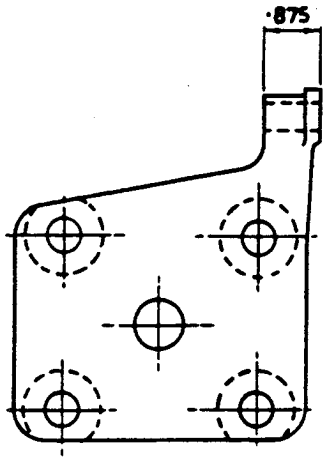

FIG. 1.

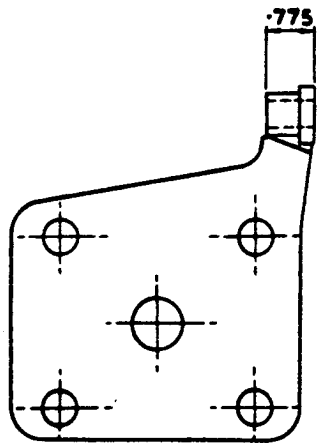

FIG. 2.

The new plate (Fig.1) is similar in general shape to the earlier designs, but no machining has been carried out on either face beyond the spot facing on the underside of the 'U' bolt holes. Owing to this, left-hand and right-hand plates are now required as follows:-

RF-8537..... Rear Spring Plate, R.H.
RF-8538..... Rear Spring Plate, L.H.

An intermediate type of modified spring plate, RF-8101 (Fig.2) was used for a short period prior to the introduction of the latest design, but this has proved unsatisfactory in service. In view of this, it has been decided to request Retailers to modify all cars in their areas fitted with this intermediate type plate on a Category 1 basis.

Although this calls for immediate retrospective action, it is realised that in many cases the geographical location of the car renders it impracticable in view of the simple nature of the work involved. In such cases, therefore, it is suggested that the action to be taken is left to the discretion of the Retailers, who may decide to forward the material and fitting instructions to the individual owner.

As a means of guidance to Retailers, the range of chassis fitted with the RF-8101 type rear spring plate is as follows:-

B-444-FV onwards to end of FV series.
All chassis in FU series.
B-1-GT to B-65-GT incl. (excluding B-51 & 53-GT).

It should be noted, that due to the increased width of the boss on the new type plate (0.875" as against 0.775" on the earlier design) new anchorage pins for the lower shock damper linkage will also be required when these new plates are fitted. These pins are supplied separately, and should be assembled in their respective plates prior to these being fitted to the car.
Proceed as follows:- Insert the pin from the shouldered face of the boss, shorter end first, push fully home, and then fit and fully tighten up the lock nut. Pean over to lock.

The recommended procedure for the removal of the existing rear spring plates is as follows:-

1) Jack up the rear axle and support the chassis by placing suitable trestles either side of the frame just forward of the rear spring front shackles. Remove the road wheels.

2) Remove the split pin and castellated nut from the rear of the lower silentbloc bush of the shock damper linkage, and then tap the bush rearwards off the anchorage pin.

3) Remove the four 'U' bolt nuts below the spring and withdraw the lower spring plate.

Assembly of the new type spring plates is approximately the reverse of the above dismantling instructions. New split pins MUST be used.

Retailers are requested to inform this Depot of all chassis numbers on which this modification is incorporated.

Approximate time for fitting - 4 hours.

MATERIAL REQUIRED.

RF-8537	Lower Rear Spring Plate - R.H.	1 Off.
RF-8538	" " " " - L.H.	1 Off.
RF-8256	Pin - Lower Silent Block Bracket-Damper	2 Off.
K -4322	Lock nut.	2 Off.

TYRE PRESSURES

COACHBUILT BODIES.

The choice of correct tyre pressures is important to ensure the best steering characteristics and tyre life. The deciding factor is the weight of the vehicle which of course, varies with coachbuilt bodies.

The following are recommended pressures for average weights:-

Front - 23 lbs.sq.in. (1.65 Kg/CM^2)
Rear - 30 lbs.sq.in. (2.15 Kg/CM^2)

The weight on the front wheels is unlikely to vary sufficiently to warrant any alteration in the recommended front tyre pressures, but the rear axle weight on certain cars may necessitate an increase in the rear tyre pressures.

The following chart shows the recommended rear tyre pressures for a given unladen rear axle weight. (This weight is the kerbside weight, i.e. full tank but no passengers).

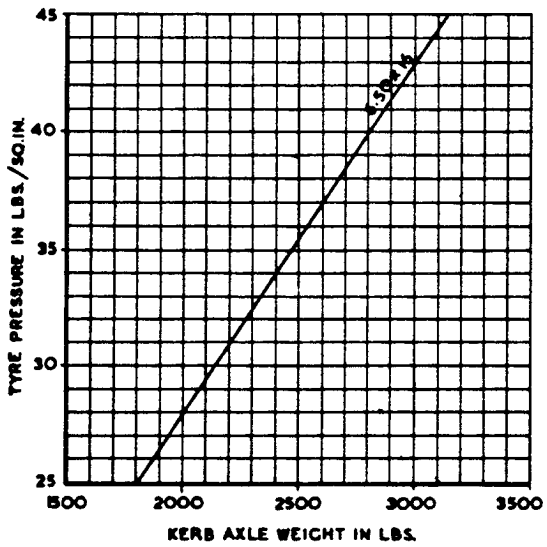

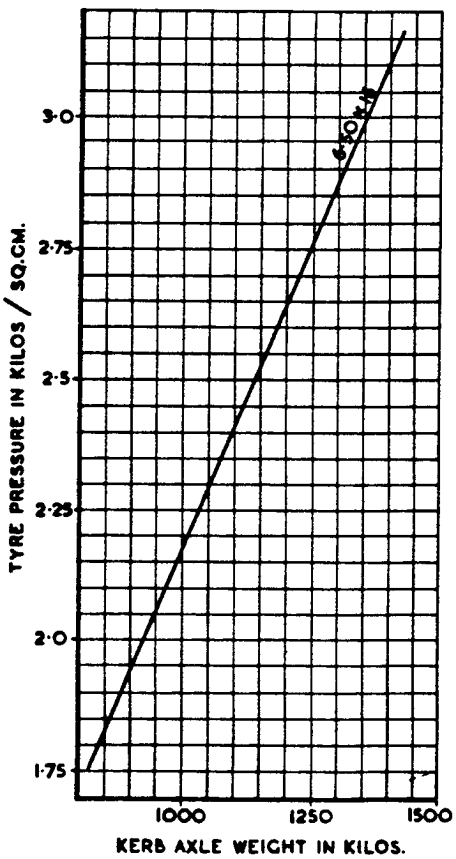

Certain cars which have a lot of overhang at the rear, but are not necessarily heavy, will steer better if the rear tyre pressures are increased a few pounds.

TYRE PRESSURES

STANDARD STEEL SALOON.

The altered characteristics of the new geometry steering which was introduced at Chassis No.B1-GT, resulted in a reduction in the slip angle of the front tyres, and therefore, there is less under-steer effect as compared with the old geometry. Some drivers may not like this reduction in under-steer, and the result may be a complaint of inferior directional stability. This effect is more noticeable on certain coachbuilt bodies which are tail heavy.

It will be found that an improvement in the handling characteristics of the car will be achieved by adopting the following tyre pressures:-

Front - 23 lbs. (1.65 Kg/CM^2)
Rear - 30 lbs. (2.15 Kg/CM^2)

The above pressures will in future, apply to all standard steel saloons with the new geometry. The rear tyre pressure on coachbuilt cars may require increasing, depending on the weight of the body.

Separate instructions are being issued regarding recommended pressures for different weights.

For cars with the old steering geometry, i.e. prior to B1-GT, it is undesirable to reduce the front tyre pressures and our recommendations therefore, stand as follows:-

Front - 25 lbs. (1.8 Kg/CM^2)
Rear - 30 lbs. (2.15 Kg/CM^2)

MODEL: BENTLEY MARK VI

FOR CATEGORY 2 ACTION:

MODIFICATION

SIDE STEERING TUBE - FRONT END SOCKET.

Commencing at Chassis No.B-215-PU steel balls (12 Fig.2) were incorporated in place of the previous bronze seat (2 Fig.3) in the front end socket of the side steering tube to reduce steering friction.

Owing to the steel balls grooving and causing hard steering, these have been discarded and reversion has been made to the original bronze seat as from Chassis No.B-390-TN and onwards on right-hand and left-hand drive cars.

This modification is therefore introduced to modify Chassis Nos.B-215-PU to B-388-TN (inclusive) to revert to the previous arrangement.

The following Bentley Continental cars also require this modification:- Chassis Nos.BC-11-A, BC-12-A, and BC-15-A up to BC-29-C inclusive.

1. PARTS REQUIRED (RE-INTRODUCED):

Part No.	Title.	No.Off.
FW-403	Pressure spring-sealing disc-front socket.	1
FW-996	Bronze seat-front socket.	1
RF-3561	Sleeve-front socket.	1
RF-3563	Sealing disc-mud excluder-front socket.	1
FW-1000	Ball end pin-front socket.	1
K-4608/Z	Split pins-ball end pins-inner end of cross steering tubes.	2
K-4614/Z	Split pins-ball end pins-side steering tube.	2
K-4616/Z	Split pin-rear end cap-side steering tube.	1

2. TO REMOVE THE SIDE STEERING TUBE:

In order to remove the ball end pin (10 Fig.2) connecting the front end of the side steering tube to the centre steering lever, it will be necessary to remove the centre steering lever unit from the frame complete with levers and the side steering tube. Proceed as follows:-

(i) Remove the front undershield, (on R.H. side for R.H. drive cars and on L.H. side for L.H. drive cars.)

(ii) Disconnect the inner ends of the two cross steering tubes from the cross steering tube centre link as below:-

a) Remove the castle nut securing each ball end pin to the outer ends of the link.

b) Place a substantial steady block in contact with the centre link near the ball pin to be removed, in order to provide a solid reaction point, and then with the aid of a large steel drift and hammer, give the eye of the centre link (adjacent to the ball pin) one or more sharp blows which will release the tapered shank of the ball pin from its location in the link. Collect the mud excluders and their pressure springs.

(iii) Disconnect the rear end of the side steering tube from the pendulum lever (drop arm) of the steering box as follows:-

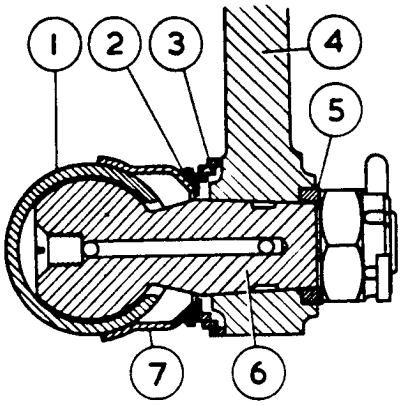

FIG.1. SECTION - BALL JOINT-SIDE STEERING TUBE REAR END.

a) Remove the castle nut and the locating washer, 5 Fig.1 from the ball end pin(6), then give the bottom of the pendulum lever (4) a sharp tap upwards, i.e. at right-angles to the axis of the ball pin. This should release the pin. A large steady block should be held against the upper end of the lever to absorb the shock,and a drift used on the lower end to prevent damage to adjacent parts.

b) If the ball pin when released cannot be removed from the pendulum lever owing to lack of clearance between the side steering tube and the frame, it will be necessary to unscrew the internal nut from the rear end of the side steering tube and remove the rear guide, spring and ball pad after which the ball pin can be pushed into the side steering tube away from the lever. When removing the side steering tube (later), take care not to lose the inner ball pad, spring, or the rear guide.

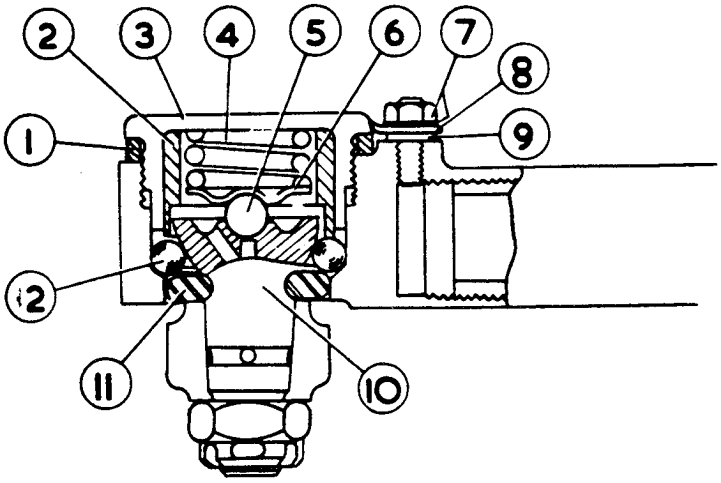

FIG.2. SECTION-SOCKET-SIDE STEERING TUBE FRONT END (PRIOR TO MODIFICATION.)

c) Collect the pressure spring 3, Fig.1, the sealing disc,(2) and mud excluder (7).

(iv) Remove the oil feed pipe(part of chassis lubrication system) and connections from the upper end of the centre steering lever unit.

(v) Remove the two $\frac{3}{8}$" B.S.F.nuts situated on the underside of the centre(jacking) plate at the rear end of the plate. Also remove the two $\frac{3}{8}$"B.S.F.nuts from the upper end of the unit. These two nuts face towards the rear of the car. Remove the unit from the frame complete with the side steering tube.

NOTE IMPORTANT: It may be found that packing washers are fitted between the unit and the frame both at the lower and upper end, in which case, care must be taken when refitting the unit to the frame that the packing washers are placed in their ORIGINAL position/s.

(vi) Disconnect the front end of the side steering tube from the centre steering lever.

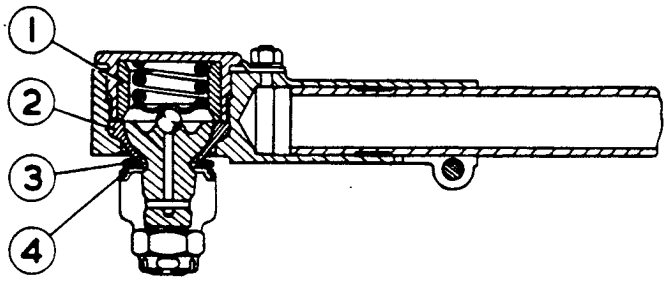

FIG.3. SECTION-SOCKET-SIDE STEERING TUBE FRONT END (AFTER MODIFICATION.)

1. Sleeve - front socket. (RF-3561)
2. Bronze seat - front socket. (FW-996)
3. Sealing disc - mud excluder - front socket. (RF-3563)
4. Pressure spring - sealing disc - front socket. (FW-403)

3. TO MODIFY THE FRONT END SOCKET(JOINT)OF THE SIDE STEERING TUBE:

(i) Remove the rubber seal(11 Fig.2)from the groove in the ball pin.

(ii) Remove the nut and spring washer, (7), the locking plate (8), the plain washer (9), and with a 'C' spanner, remove the cap nut (3).

(iii) Remove the joint ring (1) from the cap nut, the sleeve (2), the spring (4), the spring pad (6), the ball (5), the ball pin (10), and finally the steel balls (12). Items 1, 2, 9, 11 and 12, should be discarded. The sleeve (2) is replaced by the sleeve RF-3561. Clean the remaining dismantled parts.

(iv) Re-assemble the ball joint, using the new parts as illustrated in Fig.3, and refit to the centre steering lever.

NOTE: When it is found that the ball end pin (10 Fig.2) of the front socket has been grooved or pitted by the steel balls, a new pin FW-1000 (included in the list of parts on Page 1) should be fitted.

Before refitting a ball joint (ball pin) to a lever, clean the tapered shank of the ball pin and corresponding hole. Do NOT use a hammer, but rely on tightening the castle nut to draw the mating parts together.

(v) Refit the centre steering lever unit to the frame by reversing the operations for removal and re-connect the side steering tube to the pendulum lever.

NOTE: When re-connecting the side steering tube to the pendulum lever, it is important that the mud excluder (7 Fig.1) is placed the correct way round, i.e. with the longest plain portion pointing

(cont'd

towards the rear end of the tube. After placing the ball pin in the pendulum lever, make sure that the flats and lugs of the locating washer (5 Fig.1) correctly engage with the corresponding flats and slots on the ball pin and in the lever.

If it was found necessary to remove the slotted end-nut, rear ball pad and the spring and guide assembly from the rear end of the side steering tube then prior to placing the ball pin in the pendulum lever measure the length of the coil spring and if it has a free length of 0.875" (22.2 m/m) the adjustment of the rear end of the side steering tube is as follows:-

a) With the ball pin and its associated parts in position in the rear-end of the side steering tube screw in the end-nut until the ball pin can just be moved by hand.

b) Gradually unscrew the nut until the load on the ball pin is as light as possible without any slackness between it and the adjacent ball pads. If it is desirable to make the steering more positive the load on the ball pin may be increased with discretion.

If the spring has a free length of 1.225" (31.1 m/m) then adjust as below:-

Screw in the slotted end-nut, until the ball pads, spring and guide assemblies are choc-a-bloc. Slacken the end-nut back 0.100" (2.5 m/m) in order to restore theoriginal working clearance of 0.050" (1.27 m/m) between the end of each stem of the ball pads, and the inner end of the tube and the inner face of the end-nut. In all cases the end-nut must be secured by a new split pin. Part No. K.4616/Z.

(vi) Finally inspect that no split pins have been omitted. Will Retailers please notify the London Service Station of the chassis number of the car whenever they carry out this modification.

Time allowed for job is 6 hours.

SERVICE Bulletin No. BB-12

MODEL: BENTLEY MARK VI

REAR SHOCK ABSORBER LINKAGE.

Owing to the fact that the rear shock absorber linkage is assembled and tightened up at the chassis stage, the angle of the connecting link differs considerably from its position when normally loaded with the body, and a permanent strain is imposed on the silentbloc bushes when in the normal operating position.

In order to relieve this strain, the present method of assembly is to leave the final tightening of the silentbloc bushes until the car is normally laden with the body, and in order to ensure that this condition applies to cars already in service, it has been decided to take action on existing cars when they are available at Service Depots by slacking off the silentbloc fixing bolt at the lower end of the forked connecting link between the shock absorber arm and the knuckle joint on the axle. After slacking off, the car should be bounced a few times and allowed to settle in the normally loaded state, after which the bolts should be retightened.

When retightening, it should be observed that the silentbloc at the extreme lower end, i.e. the one pointing forward, is free from strain. If the strain has not been released properly, the spindle to which the silentbloc is fixed will apprear to be tilted relative to the knuckle joint. This condition should not exist in the normally laden position.

Will Retailers and Service Depots please notify the London Service Depot of the chassis numbers whenever this alteration is carried out.

ALL COMMUNICATIONS SHOULD BE ADDRESSED TO
BENTLEY MOTORS (1931) LTD., PYM'S LANE, CREWE, ENGLAND.

SECTION R

SB.2/JM.8.8.47.

PRINTED IN ENGLAND

MODIFICATION.

FOR CATEGORY 2 ACTION:

REAR BUMPER SUPPORT BRACKETS.

The length of the rear bumper support brackets on the Bentley Mark VI Chassis is dependent upon the type of body fitted. In cases where the body design causes the length of the bumper support from the rear fixing bolt (A) to its rear face (B) to exceed 8" (20.3 c.m.) a modification is introduced to ensure maximum rigidity.

This modification secures the bumper support stiffening webs to the side walls of the chassis members in the manner shown in the attached drawing.

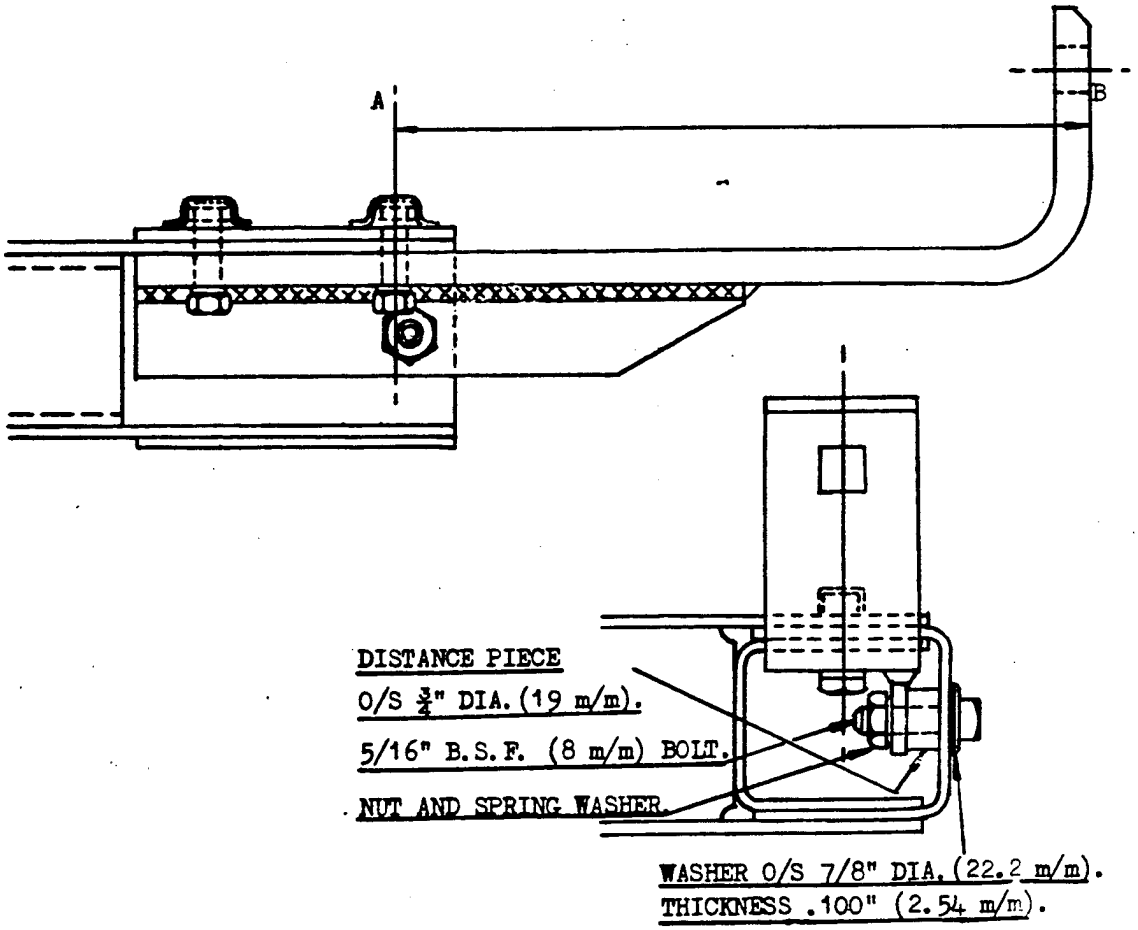

A 5/16" (8 m.m.) clearance hole is drilled through each stiffening web of the bumper support brackets and chassis frame side member at a point ½" (12.7 m.m.) from the end of the chassis frame, and 1.1/16" (27 m.m.) from its top face. The two parts are bolted together with a distance piece interposed and a plain washer on the outside of the frame.

The following additional parts, obtainable from Hythe Road Service Station, are required to effect this modification:-

Part No:		
RF. 6107	Distance Piece	2 Off
K. 308	Bolt.	2 "
K. 4313	Nut.	2 "
K. 9009	Washer.	2 "
KB. 3906	Washer.	2 "

The distance piece must be a tight push fit between the stiffening web and the chassis frame side wall before the assembly is bolted in order to prevent any stress or distortion when the bolt is tightened. The distance piece supplied has a thickness of .450" (11.4 m.m.) which must be reduced to suit the individual requirements of the chassis.

Where the length of the bumber support brackets, between points A and B does not exceed 8" (20.3 c.m.) no action is necessary.

Simultaneously with the issue of this Bulletin, coachbuilders are being notified of the introduction of the above modification and will incorporate it on all chassis at their works.

All new coach built chassis from B-190-CF will be drilled to facilitate the inclusion of the modification.

MODIFICATION.

For Category 2 Action:

REAR SHOCK DAMPER LINKS.

A modified type of retaining nut is now specified for the Silentbloc bush which connects the rear spring pad stud to the shock absorber linkage. The new nut has a flange, the diameter of which is greater than the bore of the knuckle into which the bush is fitted.

It is intended that this flange should act as a safety device to prevent the shock absorber linkage becoming detached from the spring pad stud, if severe road conditions cause the Silentbloc bush rubber to shift in its housing.

This condition may occur on a type of road which causes the rear suspension to move repeatedly on to the "full rebound" stop over prolonged periods.

Before fitting the new nut, the Silentbloc bush should be examined; if there are no signs that the rubber has moved in relation to the bush, there is no necessity to change the bush, but if it appears that the rubber has started to creep out of the end nearest the front of the car, it should be renewed.

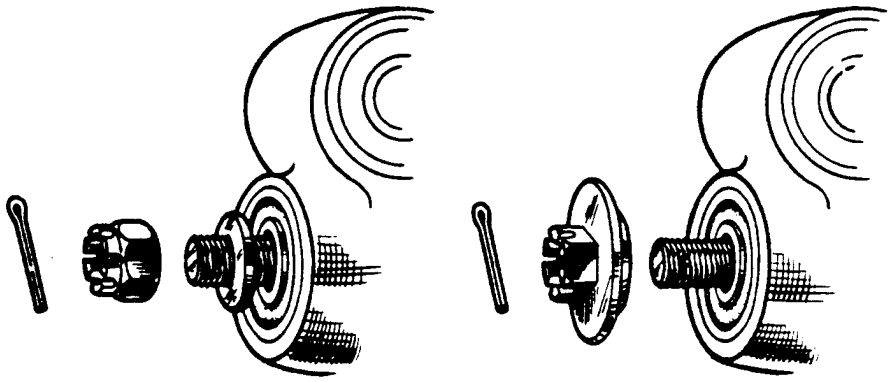

PRE-MODIFIED ASSEMBLY MODIFIED ASSEMBLY

Arrangements have been made for all Retailers to receive a quantity of the modified nuts, part No: RF-6448, and shock absorber knuckles complete with bushes, part No: FB-3049A. Further supplies may be obtained when necessary from the London Service Depot. Retailers are requested to return the original knuckle unless the cost of forwarding makes return impracticable.

This modification has been incorporated on production from chassis No B-268-DA onwards and all earlier cars should be dealt with on a Category 2 basis.

DASHBOARD SIDE MOUNTING BRACKETS

(STANDARD STEEL SALOON)

This Bulletin cancels BB-115.

Further experience in the investigation of engine vibration transmitted through the dashboard has shown that deletion of the mounting bracket is not wholly affective. It has therefore been decided to cancel the instructions given in Bulletin BB-115.

In the event of complaints of engine vibration, Retailers are advised to refer the matter to the London Service Station.

For Category 2 Action (Overseas Retailers only).

REAR ROAD SPRING "U" BOLTS.

In order to reduce stress concentration at the junction of stem and saddle of the rear road spring "U" Bolts, the blending radius has been increased.

This alteration became effective at some time during the production of 'D' Series.

It has been decided to fit the improved "U" Bolts (Part No. RF.3269 unchanged) to all cars on which they are non existent.

The Chassis Nos. affected are:-

'A' Series	-	B.AK 2-254 B.AJ 1-247
'B' Series	-	B.BH 2-400 B.BG 1-401
'C' Series	-	B.CF 2-500 B.CD 1-501

In addition all cars in 'D' Series, B.DA 2-500 and B.DZ 1-105, should be inspected and "U" Bolts changed if necessary.

Retailers will be supplied with an initial stock of the improved "U" Bolts and any existing stocks already held should be examined. Early type "U" Bolts should be scrapped.

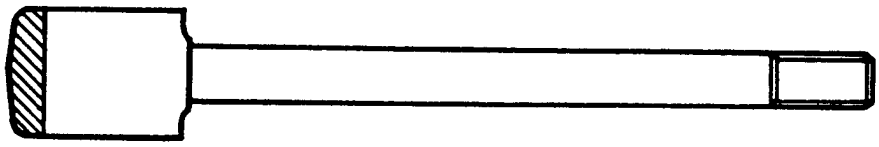

EARLY TYPE

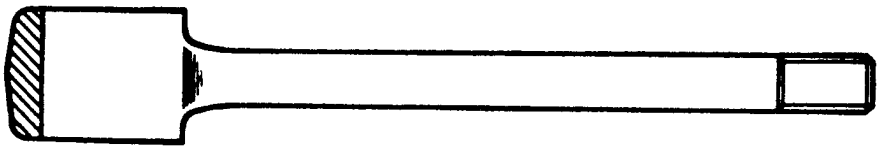

LATE TYPE

CATEGORY 3A.

REVISED REAR BODY "SILENTBLOC" MOUNTING STIFFENING PLATES.

To prevent any possibility of distortion to the four wheel arch rear body "Silentbloc" bush mountings, new one piece stiffening plates of thicker metal are to replace the existing two piece stiffening plates.

PROCEDURE.

Raise the rear of the car and remove the rear wheels so that the wheel arch body mountings, two per side, are visible. Remove the two nuts securing the "Silentbloc" bush mounting to the frame, discard the existing stiffening plates under the nuts and ¼ BSF bolts and fit the longer bolts, the one piece stiffening plate, and the new spring washers with the existing nuts.

On certain chassis owing to lack of clearance between the body brackets and the frame brackets it may be necessary to remove the existing "Silentbloc" mounting securing bolts by cutting off the heads and fitting the new bolts from beneath.

Attend to one body mounting at a time to avoid distortion to the coachwork.

MATERIALS.

	Part No.	No. Off.
Stiffening Plate	UR.2889.	4.
Bolt	K.204/Z.	8.
Spring Washer	K.9008.	8.

CHASSIS.

Bentley 'R' Type and Mark VI.
Bentley 'R' Type Continental.

The time allowed for this work is 2 hours.

SERVICE Bulletin No. BE.240

MODEL: BENTLEY MARK VI

FOR INFORMATION

DUNLOP JACKING SYSTEM

CONVERTING EARLY SERIES B VI STANDARD AND COACHBUILT BODIES

As existing stocks of the Bevelift Jack (RF.3852) have now reached a minimum and because the demand for the jacks is so small, it has been agreed that in future, cars requiring a replacement jack are to be converted to the Dunlop jacking system.

To enable Retailers to carry out this conversion, the following procedure should be adopted.

Applicable to:		Chassis Number
Bentley VI (Standard Body)	up to	B.234. CF
Bentley VI (Coachbuilt)	up to	B.292. CF

THE B VI STANDARD BODY JACKING SYSTEM - TO CONVERT.

In order that the Dunlop jack may be used, the two existing 3rd body mounting brackets must be removed from the chassis and replaced by the later type of mounting bracket (RF.6007). This bracket is provided with a slide bar adaptor which is welded in position on the bracket.

Shown in Figure 1 are the material requirements necessary to convert one of the two 3rd. body mounting brackets; also shown are the Dunlop jack and handle.

To remove the brackets, which are located on the chassis frame beneath

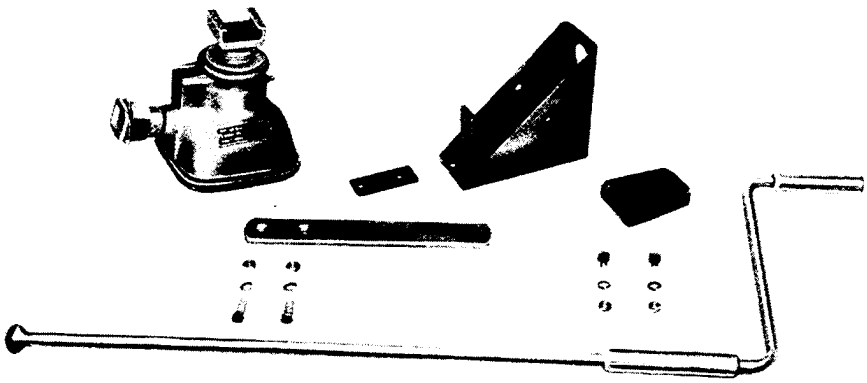

Fig. 1. Parts to convert Standard cars

the bases of the B and C posts, remove the four 5/16 in. nuts and bolts securing the brackets to the frame and the $\frac{3}{8}$ in. nuts from the centre bolts of the Silentbloc mountings. The Silentbloc mountings are secured to the mounting brackets by four $\frac{1}{4}$ in. nuts and bolts. Remove these nuts and bolts and then fit the Silentbloc mountings to the new body mounting brackets (RF.6007). Fit the new mounting brackets to the chassis frame using the original nuts, bolts and washers ensuring that the heads of the two lower bolts are on the outer side of the frame as shown in Figure 2. When fitted in this position, the heads of the bolts act as stops for the jacks when they are pushed along the slide bars.

The support brackets (RF.6011) and the slide bars (RF.6015) may then be fitted to the body mounting brackets, as shown in Figure 2. Packing plates (RF.6013) should be placed between the slide bars and the body mounting brackets to give a clearance of 0.375 in. between the slide bar and the underside of the sill as shown by measurement A in Figure 2. The 0.750 in. deep flange on the underside of the sill (see B. Fig.2) should be flattened for a minimum distance of 2.000 in. on either side of the centre line of the slide bar.

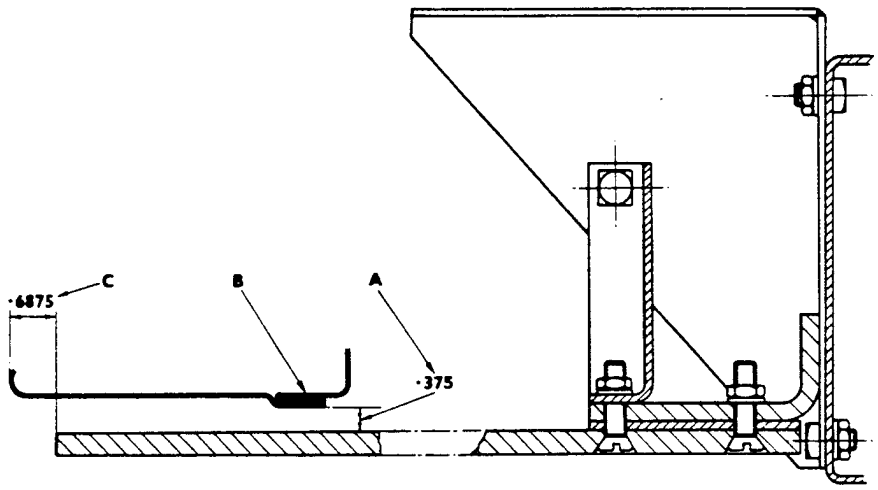

Fig. 2. Dimensions for fitting Support Brackets and Slide Bars

Material Required:

RF.6019	Jack	1 off
RF.9220	Jack Handle	1 off
RF.6007	3rd Body Mounting Bracket	2 off
RF.6011	Support Bracket	2 off
RF.6013	Packing Plate	As required
RF.6015	Slide Bar	2 off
K.302/Z	Bolt.Support Bracket	4 off
K.3022/Z	Screw.Slide Bar	4 off
K.4313/Z	Nut.Support Bracket and Slide Bar	8 off
K.9009/Z	Washer.Support Bracket and Slide Bar	8 off

JACK STOWAGE

Figure 3 shows the Dunlop jack stowed in the spare wheel compartment on the left-hand side of the spare wheel. The wedge shaped wood block (RW.2340), on which the jack stands, is fitted so that its thinner end butts against the transverse rib of the floor (see A. Fig.5) and its left-hand edge is 3.125 in. from the wall of the spare wheel compartment (see B. Fig.5). The wedge is secured to the floor by two countersunk screws; these are of different lengths to allow for the variation in the thickness of the wood block.

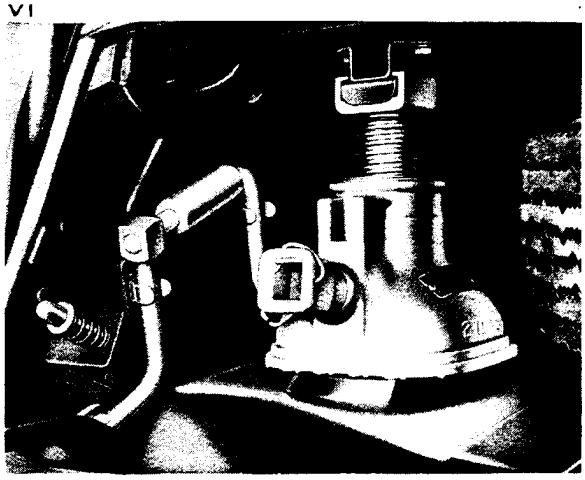

Fig. 3. Stowage of Jack

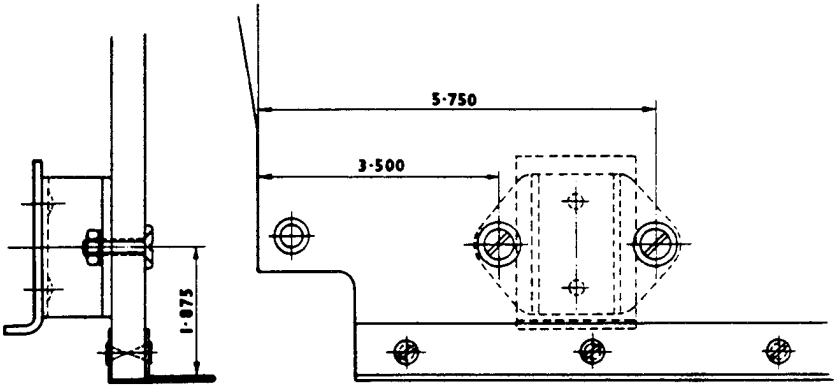

Fig. 4. Dimensions for fitting Upper Support

The upper support (327/257) for the jack should be fitted to the underside of the luggage floor, working to the dimensions shown in Figure 4 so that the upper support lip is facing towards the rear of the car (see Fig.5).

The upper support is secured by two $\frac{1}{4}$ in. countersunk screws and nuts.

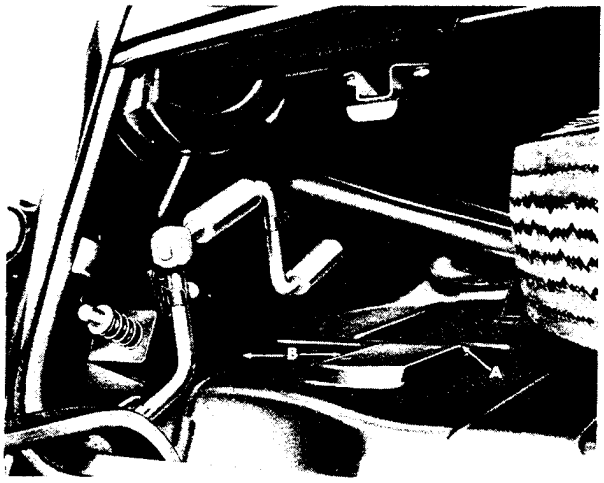

Fig. 5. Fitting of Wood Block

Material Required:

RW.2340	Wood Block	1 off
327/257	Upper Support	1 off
CS.30702/Z	Screw. Wood Block	1 off
CS.30704/Z	Screw. Wood Block	1 off
CS.30703	Screw. Upper Support	2 off
K.4310/Z	Nut. Wood Block & Upper Support	4 off
CS.6708/Z	Washer. Wood Block & Upper Support	4 off
CS.34340/Z	Cup Washer.Upper Support	2 off

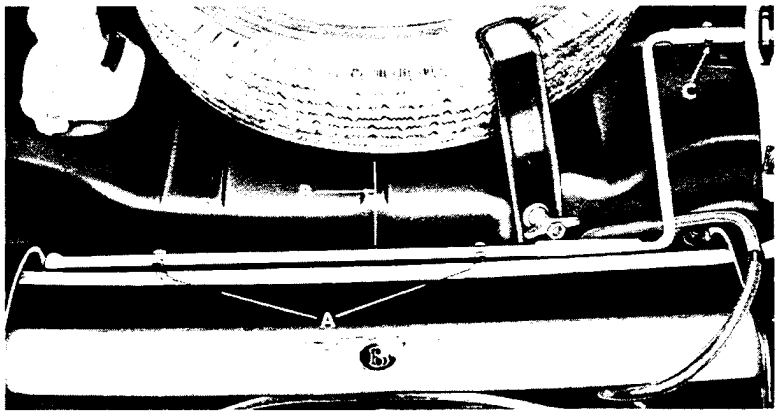

Fig. 6. Fitting of Jack Handle Clips

JACK HANDLE STOWAGE

Remove the Bevelift jack clips from the well of the spare wheel compartment in order that the two rear jack handle support assemblies (327/256) may be fitted.

Detach the lower boot door sealing rubber at the two points marked 'A' in Figure 6, sufficiently to enable two 4BA clearance holes to be drilled through the sealing rubber securing flange. Taking the centre of the stiffening rib of the spare wheel compartment floor as a datum line (see B. Fig.6) drill the two clearance holes at points 10 in. to the left and 4.500 in. to the right of the datum line. Secure the two jack handle rear supports in position with two 4BA screws and nuts, using the two upper holes in the supports. The countersunk heads of the screws should be on the outer side of the sealing rubber securing flange. Refit the rubber seal. Using the two lower holes in the support brackets as guides, drill two 3BA clearance holes through the floor of the well at the rear of the spare wheel compartment, then secure the rear supports with two 3BA screws and nuts.

Fit the jack handle in position in the two rear supports and clip the front support (327/258) to the centre of the jack handle grip (see C. Fig.6). Lay the handle grip on the floor of the spare wheel compartment, then using

the holes in the front support as guides, make two 'centre pop' marks on the spare wheel floor and drill two 3BA clearance holes in the spare wheel floor; secure the front support in position using two 3BA screws and nuts.

Material Required:

327/256	Rear support	2 off
327/258	Front support	1 off
CS.30077/Z	Screw. Rear support	2 off
CS.30975/Z	Nut. Rear support	2 off
CS.7102/Z	Screw. Rear support and front support	4 off
CS.5702/Z	Nut. Rear support and front support	4 off
K.9005/Z	Washer. Rear support and front support	4 off

THE B VI COACHBUILT BODY JACKING SYSTEM - TO CONVERT

The procedure adopted for converting the jacking system on coachbuilt cars is basically the same as for the standard body. The conversion should be carried out in the same manner except where stated otherwise in the following paragraphs. Figure 7 shows the material requirements necessary to convert one of the jacking brackets; also shown are the Dunlop jack and handle.

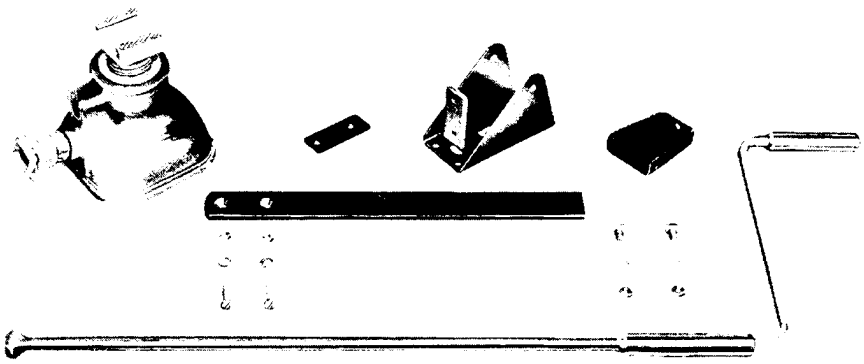

Fig. 7. Parts to convert Coach-built Cars

The jacking brackets used on coachbuilt cars do not act as body mounting brackets, therefore the operation of removing the existing Bevelift jacking brackets and fitting the later type brackets (RF.6009) is greatly simplified. Fit the brackets as described previously. When fitting the slide bar, it may be necessary to trim the end of it in order to obtain the correct clearance between the edge of the sill and the end of the slide bar. (see C. Fig.8).

Material Required:

RF.6019	Jack	1 off
RF.9220	Jack Handle	1 off
RF.6009	Jacking Bracket	2 off
RF.6011	Support Bracket	2 off
RF.6013	Packing Plate	As required
RF.6016	Slide Bar	2 off
K.302/Z	Bolt. Support Bracket	4 off
K.3022/Z	Screw. Slide Bar	4 off
K.4313/Z	Nut. Support Bracket and Slide Bar	8 off
K.9009/Z	Washer. Support Bracket and Slide Bar	8 off

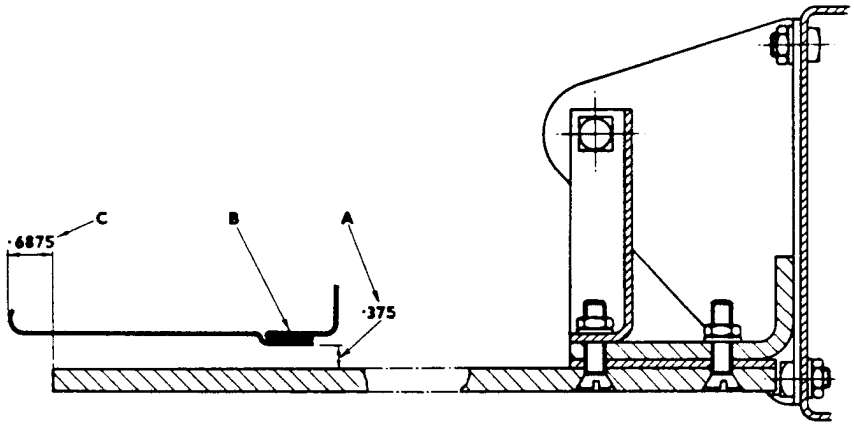

Fig. 8. Dimensions for fitting Support Brackets and Slide Bars

JACK AND JACK HANDLE STOWAGE

The design of the boot on coachbuilt cars varies according to the type of body that is fitted. The jack and jack handle therefore, will have to be stowed in such a manner to suit the layout of the boot.

It is suggested that the jack securing strap and handle clips that are used on 'R' type cars should be used to stow the jack and handle on coachbuilt cars.

If it is decided to use the above parts for securing the jack, they should be fitted in the following manner:-

Bolt the strap anchor plate (RB.5971) to the floor using two 2BA screws and nuts. Place the jack beside the anchor plate and secure the strap (RB.6137) to the floor with two further 2BA screws and nuts. The jack is secured in position by passing the strap over the jack and attaching the hook at the end

of it to the anchor plate. Another method of securing the jack is by means of a strap (RB.6175) which bolts onto the side wall of the spare wheel compartment. A special securing plate (RB.6176) must also be fitted with this wall type strap.

The following parts will be required if either of the above methods is adopted.

Material Required:

Jack Stowage (Floor fixing strap).

RB.6137	Jack Strap	1 off
RB.5971	Anchor Plate	1 off
CS.30144/Z	Screw. 2BA	4 off
CS.30980/Z	Nut. 2BA	4 off
CS.32044/Z	Washer. Plain	4 off
K.9006/Z	Washer. Spring	4 off

Jack Stowage (Wall fixing strap).

RB.6175	Jack Strap	1 off
RB.5971	Anchor Plate	1 off
RB.6176	Plate. Jack Strap	1 off
CS.30144/Z	Screw. 2BA	5 off
CS.30980/Z	Nut. 2BA	5 off
CS.32044/Z	Washer. Plain	5 off
K.9006/Z	Washer. Spring	5 off

Jack Handle Stowage.

RB.5947	Clip	2 off
RB.5950	Clip	1 off
CS.30564/Z	Screw. 2BA	6 off
CS.32044/Z	Washer. Plain	6 off
CS.30980/Z	Nut. 2BA	6 off
K.9006/Z	Washer. Spring	6 off

FOR INFORMATION:

WELDING OF FRONT SILENCER END COVERS.

Instances have occurred where the end covers of the front silencer on earlier type chassis have become detached during service.

Normally the jubilee clips used are sufficient to ensure that these end covers are retained in position, but due to the continual expansion and contraction of the silencer, it has been found that these clips tend to become stretched, thereby making it possible for the end covers to work loose and fall off.

To overcome this trouble in service, it has now been decided to modify the method of fixing the end covers by welding them to the upper and lower centre lagging covers of the silencer, and Retailers are recommended to carry this out whenever called upon to deal with complaints of this nature.

PROCEDURE.

NOTE: The welding is done with the silencer in position on the car.

1. Place the car over a pit or on a ramp.
2. Clean and refit the end covers to the silencer and weld them to the centre lagging covers as shown in the attached sketch. (N.B. The two end jubilee clips will no longer be required and should be discarded.)

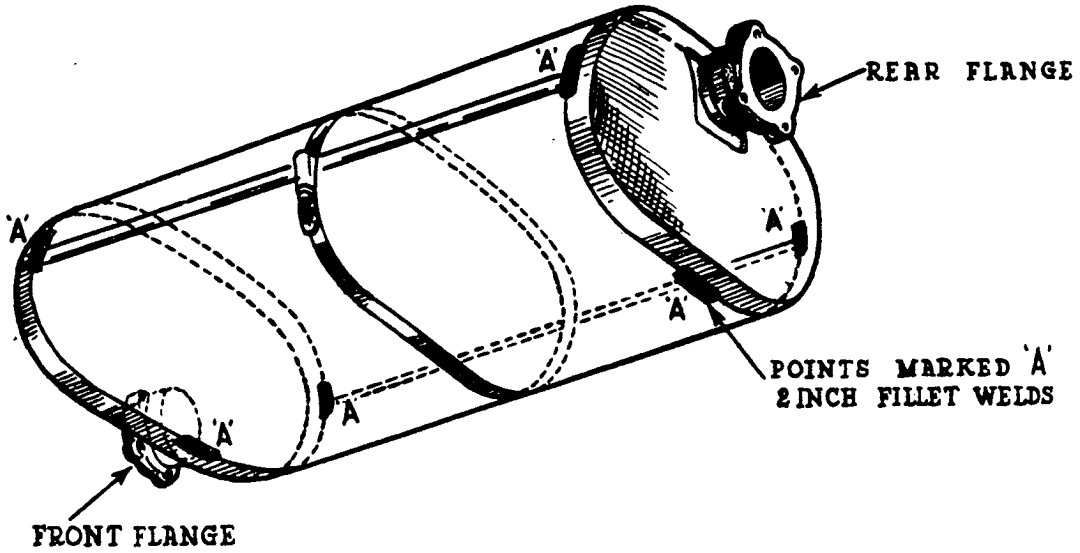

FOR INFORMATION:

HEAT SHIELDS FOR FRONT SILENCER ASSEMBLY

(BENTLEY MK.VI STANDARD SALOON)

A Heat Shield for the front silencer is available for incorporation on Mark VI Standard Steel Saloons in service in cases of complaint of excessive heat on the rear floor and under the passenger seat. It may also be fitted to cars with coachbuilt bodies which are similar to the Standard Steel Saloon.

The shield consists of an aluminium sheet, which is interposed between the silencer and underside of the floorboards, and which is located in position by means of four mounting brackets bolted to the left-hand cruciform and frame side members respectively. A swaging formed at the forward end of the shield ensures clearance between the bottom of the under-seat heater and the shield. Fig. 1 illustrates the general view of the shield from the forward end when fitted on a car.

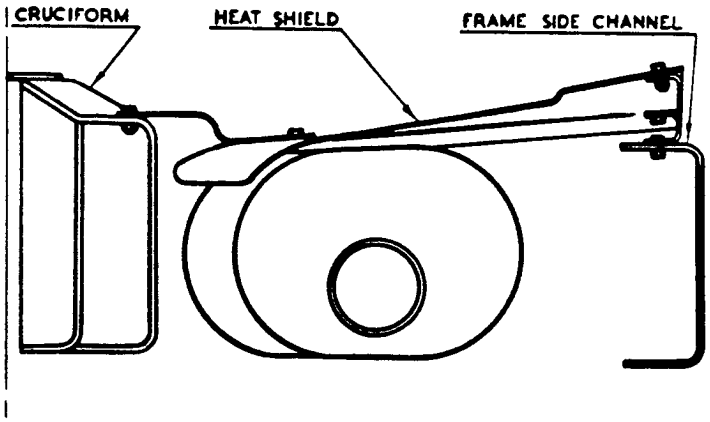

FIG. 1.

The angle at which the shield is fitted relative to the silencer ensures that the heat will be carried towards the outer edge of the body, where it will be rapidly dissipated in the cold air currents created by the motion of the car.

FITTING PROCEDURE.

1. Place the car over a pit or on a ramp.

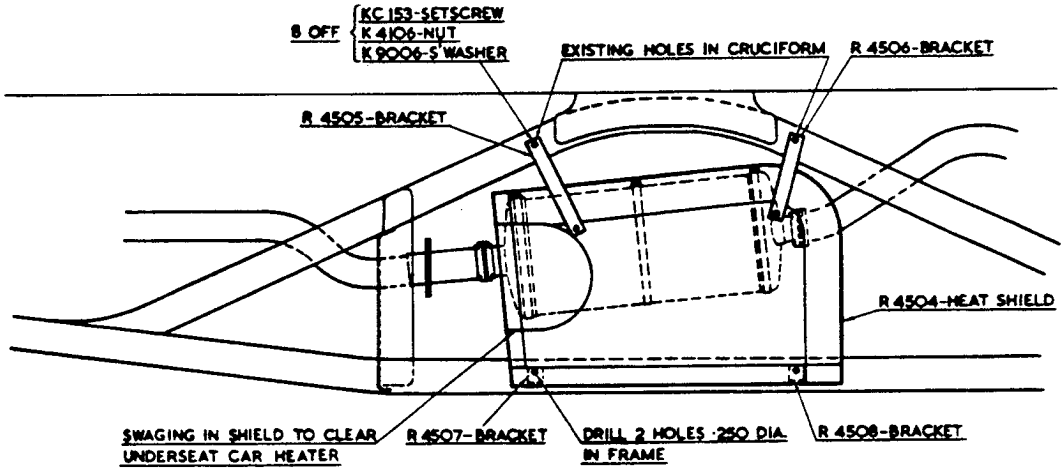

FIG. 2. GENERAL ARRANGEMENT OF HEAT SHIELD IN POSITION.

2. Remove the eight nuts and bolts from the front and rear flanges of the front silencer, break the joints, and lower the silencer to the ground.

3. Locate the two clips securing the one-shot lubrication pipe to the underside of the top flange of the cruciform on the left-hand side, and remove the existing 2-BA screws and nuts. (Shown in Fig. 2 as existing two holes in cruciform).

4. Fit the mounting brackets to the shield (longest brackets go to the forward end of the shield) and then offer up the assembly so that the brackets rest on the top of the cruciform and frame side members respectively. Coincide the screw holes in the free ends of the two inner mounting brackets with the existing two holes in the cruciform top flange, and then temporarily secure by means of the longer setscrews provided. Adjust the shield by bending the inner support bracket so that there is clearance between the underside of the underseat heater and the shield. Temporarily refit the front silencer, and check for clearance between this and the underside of the shield. Due to variations in chassis construction and body fitting, a certain amount of adjustment may be required before a definite clearance can be obtained at all points. It is essential that the maximum amount of tilt INWARDS is obtained for the shield

(Fig.1), but at no time should the clearance between the outer edge of the shield and body and inner edge of the shield and silencer be less then $\frac{1}{4}$".

5. When the requirements are obtained, remove the silencer, mark off the relative positions for the mounting bracket bolt holes on the top flange of the frame side member, and drill accordingly (Fig.2). Secure outer mounting brackets to frame.

6. Refit the front silencer, using two new washers for the flange joints.

Approximate time for fitting = 2 Hours.

MATERIAL REQUIRED.

R-4504	Heat Shield - Front Silencer.	1	Off
R-4505	Bracket, Mounting - Inner - Front.	1	"
R-4506	" " " Rear	1	"
R-4507	" " Outer -Front	1	"
R-4508	" " " Rear	1	"
KC-153	Setscrew - 2BA	8	"
K-4106	Nut.	8	"
K-9006	Spring Washer.	8	"
EW-2002	Joint - Front and Rear Flanges - Front Silencer.	2	"

MODIFICATION.

FOR CATEGORY 2 ACTION.

SIDE SPARE WHEEL CARRIER.

When a side spare wheel carrier is fitted, variations in the width of the wheel flange have, in some cases, reduced the number of threads engaged by the clamping handle on the hub bolt, thus decreasing the margin of safety.

A modification has been incorporated on later cars to provide an adequate safety margin, but retrospective action should be taken on cars already in service. It can easily be ascertained whether a sufficient number of threads are engaged by measuring the overall thickness of the washer C; if this does not exceed .104" ± 10 (2.64 m/m ± .254), no further action is necessary. If however, the thickness of the washer is greater than the above, the following action should be taken.

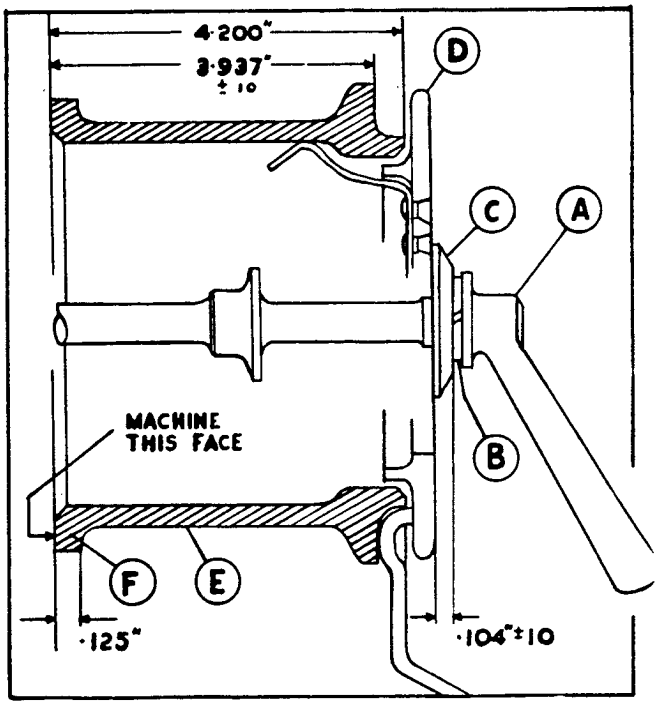

Machine the washer C to an overall width of .104" ± 10 (2.64 m/m ± .254).

Machine the flange F on the dummy hub E to give the dummy hub an overall length of 4.200" (106.687 m/m) as shown in the sketch. The internal chamfer of 45 degrees can be omitted.

The wheel can now be re-assembled on the carrier discarding the spring washer 'B'.

This modification ensures that a minimum of five threads are engaged for a maximum variation of wheel flange.

Will Retailers please notify this Service Depot whenever this modification is incorporated.

DUNLOP TRIPLE-LIFT JACK.

FOR INFORMATION:

On cars equipped with a Dunlop Triple-Lift Jack, cases are known to have arisen whereby the sill (bodywork) has been damaged owing to some owners having jacked up from the sill instead of placing the jack on the slide provided.

Will Retailers therefore kindly note that when there is evidence of damage to a sill caused by incorrect use of the jack, the owner should be informed how it should be used i.e.:-

(i) Pull the hand brake well on.

(ii) Place the jack on the slide provided beneath the body sill near the centre body pillar and push the jack beyond the sill, right up to the bracket which supports the slide.

(iii) Spin the body of the jack to the ground, insert the handle and jack up the car.

FOR INFORMATION:

TYRE VALVES.

A few cases have occurred in service where owners have complained of difficulty in inflating the tyres, due to the tyre valves not protruding far enough through the wheel discs to make efficient connection with the tyre pump air line.

In each of these cases the trouble was overcome by the fitting of suitable valve extensions giving an extra 0.875" valve length, and Retailers are recommended to incorporate these whenever dealing with complaints of this nature.

The valve extension recommended is the Schrader No.7747.

FOR INFORMATION:

ROAD WHEELS & FRONT HUBS - RIGHT-HAND & LEFT-HAND DRIVE.

("REVISED STEERING GEOMETRY")

New road wheels have been incorporated on the introduction of the Revised Steering Geometry, commencing with G Series, i.e. Chassis B-1-GT. and onwards. These wheels are equipped with Ace Super Silent Discs as a standard fitting.

1. BALANCING THE ROAD WHEELS:

The method of balancing the road wheels has been changed, the weighting washers have been superseded by four equal steel weights spaced at intervals around the wheel as required to effect balance:-

1. Balance Weight (4 off).
2. Balance Weight Hole (24 off).
3. Wheel nut (5 off).
4. Disc Rubber (6 off).

To balance a wheel, proceed as follows:-

(i) Remove the wheel.

(ii) If a hub on a bench is not available, make sure that the front hub on the car is quite free to rotate and not restricted by too close adjustment of the brakes.

(iii) Remove all balance weights, bolts and nuts.

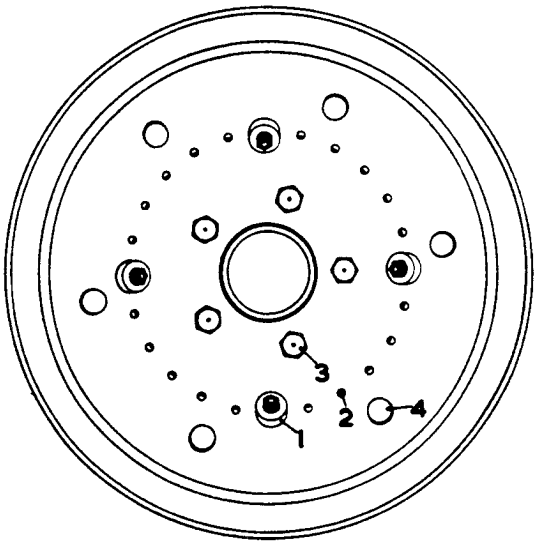

FIG. 1. PLAN VIEW OF ROAD WHEEL SHOWING BALANCE WEIGHTS IN REVERSE POSITION.

(iv) Reverse the bolts in the wheel, this will allow the operation of balancing to be performed more easily, as the balance weights may then be fitted externally.

(v) Refit the wheel to the hub. Allow to swing and note the light point. Put one weight here. Allow the wheel to swing again. If the wheel is in balance, space the other 3 weights evenly round the wheel.

(vi) If the light point is unchanged in position, add a second weight using one of the adjacent holes. If this corrects the balance, add the other 2 weights opposite each other.

(vii) If 2 weights together are too much, try moving them away from each other. Go one hole at a time and move each weight alternatively.

When balance has been achieved, add the 2 weights opposite each other.

(viii) If 2 weights together are insufficient add a third, using an adjacent hole. If this balances the wheel, remove the centre weight and refit it 4 holes to one side. Fit the 4th weight 4 holes to the other side.

(ix) If 3 weights are insufficient add the 4th, and if this is too much, start separating the outer 2 weights as in (vi) above.

(x) Remove the wheel and reverse the bolts so as to return the balance weights to their correct position, on the inside of the wheel.

(xi) Refit the wheel and the wheel disc assembly. The correct tension on the disc is attained by giving the nut one complete turn by the special spanner provided after the disc has been felt to be in contact with the rubber stops on the wheel centre.

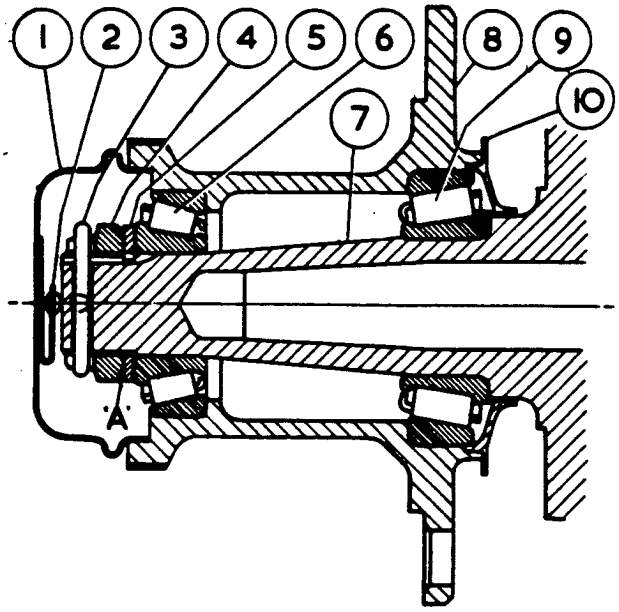

1. Dust cover.
2. Earth contact.
3. Split pin.
4. Castellated nut.
5. Key washer.
6. Taper Roller Bearing (outer).
7. Stub axle.
8. Front hub.
9. Taper Roller Bearing (inner).
10. Grease Retainer.

FIG. 2. SECTION - FRONT HUB.

2. FRONT WHEEL HUBS:

The front hubs incorporate taper roller bearings. The correct end float for these bearings is .002" - .004" (.05 - .10 m/m) as described in paragraph 4.

3. TO REMOVE A FRONT HUB:

(i) Remove the hub cap and wheel disc assembly with the special spanner RF-3851.

(ii) Remove the five wheel securing nuts with the wheel brace RF-3375 and remove the wheel.

(iii) Slacken off the brake adjuster screw so that the brake shoe linings are clear of the drum.

(iv) With the aid of two screw drivers, prise back (remove) the dust cover (1 Fig.2) from the hub.

(v) Remove the sealing strip from split pin (3). Remove the split pin, the nut (4), the washer (5) and withdraw the hub by hand.

(vi) Normally the hub will withdraw with the outer and inner taper roller bearings complete. Should the inner race of the inner bearing remain on the stub axle (7) on withdrawal of the hub, it will be found that the grease retainer (10) has parted from the hub. It will then be necessary to prise the inner race off the stub axle by means of levers. It may be found that the cage and rollers will part from the inner race (due to the difficulty of obtaining a point of leverage whilst the roller cage is in position). Should this occur, it will be possible to obtain direct leverage on the inner race to complete the removal. The greatest care should be taken in the use of levers to avoid damage to the bearing, particularly to the roller cage - also the edges of the grease catcher which is attached to the stub axle. It should be noted that the inner race of each bearing should be a slide fit on the stub axle, and it is permissible to polish the journal/s of the stub axle with a piece of fine emery cloth as necessary. The grease retainer (10) is a light tap fit in the hub.

NOTE: The grease retainer on the right-hand side hub, has a right-hand Acme Thread and the rear of the retainer is distinctly marked "Off Side - Right hand". The retainer on the left-hand side hub is also marked to suit.

(vii) Each hub is packed with 2½ ozs. (70 gms) of Shell Retinax H, grease. For alternative types of grease see "Recommended Lubricants", Chart No. RR/D2a.

4. TO REFIT A FRONT HUB & CHECK THE END FLOAT ON THE FRONT WHEEL BEARINGS:

(i) Place the hub in position, followed by the outer bearing. Fit the key washer (5) and nip up the castellated nut (4) (do not overtighten) sufficiently to take up all end float in the hub. Next unscrew the nut a little to enable two .002" (.05 m/m) thick feeler gauges to be placed diametrically opposite to one another between the nut and the key washer; i.e. at point 'A' Fig.2. With the feelers in this position tighten up the nut hand-tight with a BOX SPANNER (do not use a tommy bar). If now, one of the two split pin holes in the stub axle does not line up with a slot in the castellated nut, then select one of the two key washers RF-8370, .125" (3.17 m/m) thick or RF-8371 .123"(3.12 m/m) thick, now available, to obtain alignment of a split pin hole with a

slot in the nut and co-incidentally to obtain the required end float of .002 - .004" (.05 - .1m/m)

Using a new split pin (K-4627/Z), twist the pin a $\frac{1}{4}$ of a turn and bend the head of it slightly to ensure that the head of the pin (when fitted) does not foul the bottom of the slot of the nut. It should be noted that if the head of the pin is bent too far outwards, it may foul the earth contact (2) of the dust cover and damage it; this point must be watched during assembly. Fit the split pin and bend the legs of it around the nut and check that the hub turns freely.

(ii) Refit the wheel and the wheel disc assembly. The correct tension on the disc is attained by giving the nut one complete turn by the special spanner provided after the disc has been felt to be in contact with the rubber stops on the wheel centre.

(iii) Re-adjust the front brakes externally as necessary.

PRINTED IN ENGLAND

FOR INFORMATION:

LUBRICATION OF FRONT HUBS.

The grease at present recommended for the front hubs is Shell Retinax H. Some difficulty has recently been experienced with this grease due to lack of fluidity at low temperatures, resulting in the development of a squeak from the bearings.

Satisfactory results have been obtained with Shell Retinax A which is a lithium base grease.

It is recommended that this grease should be used in future in place of Retinax H.

FOR INFORMATION:

"BUTYL" INNER TUBES

This Bulletin cancels previous Bulletin No. BB.181. dated, 22.12.53. and 10.2.54.

Bentley cars will shortly be fitted with inner tubes manufactured from "Butyl" (synthetic rubber).

The advantage of these tubes is that they retain their inflated pressure for long periods, and it is only necessary to check the tyre pressures monthly instead of the normal weekly interval.

To identify these tubes from the standard rubber tubes, the valve stems are coloured Blue.

In the event of a puncture, "Butyl" tubes may be repaired in an identical manner to that of natural rubber tubes. Providing, that particular care is taken to properly roughen and solution the tubes, they can be satisfactorily "cold" patched.

As these tubes having once been inflated retain their extended size, care must be taken when refitting the tube into the tyre casing, as this may be found a somewhat awkward operation.

FOR INFORMATION:

BENTLEY CONTINENTAL MODELS

TYRE PRESSURES - 7.60 x 15 TYRES.

Owners are being advised that provided continual high speed cruising is not maintained it is permissible to lower the tyre pressures to obtain a more comfortable ride.

"Tyre pressures of 22 lbs/sq. in. on the front and 24 lbs/sq.in. on the rear may be used for all normal running in England and the car may be driven up to its maximum speed for short periods. If, however, it is intended to drive the car as fast as possible for a long run on roads which are known to be straight, and at a time of day when traffic is likely to be slight, then pressures should be increased to 27 front, 30 rear. Conditions when this is desirable practically never occur in England. For touring on the Continent at sustained speeds above 100 m.p.h., it is recommended that the tyres should be inflated to 30 front, 35 rear. It is not necessary to inflate the tyres to this pressure abroad unless sustained high speed cruising is required.

All pressures quoted are with the tyres dead cold, that is after standing for 12 hours."

FOR INFORMATION.

DUNLOP WHITE SIDEWALL TYRES.

It has been remarked that the white sidewall of the above tyres can appear to become discoloured and turn yellow.

This yellowing is the direct result of the effects of exposure to light, and the degree of yellowing is dependent on the length of time of exposure and the intensity of light.

The colour change is very superficial and can quite easily be removed by the use of any of the proprietary brands of whitewall tyre cleaner.

The condition is usually confined to showroom cars, since, once a car is prepared for the showroom, and whilst every other part of the car receives regular cleaning, the tyres receive no further attention other than the removal of the original protective blue paint.

In Service, the condition is not usually encountered, due to regular cleaning and washing, which the whole car and wheels receive.

The following three points should be noted:-

1. Initially, the protective blue paint must be removed by vigorous washing using soap powder and a brush having brass bristles.

2. When the car is standing in the Showroom, the tyres must be cleaned once a week with Simonize or some other proprietary white-wall cleaner.

3. For owner use, Brillo soap pads or other soap impregnated wire wool pads are convenient for quick whitewall cleansing whilst the car is being washed.

Adherence to the above points will obviate any discolouration of white sidewall tyres in the future.

DUNLOP TYRE EQUIPMENT FOR BENTLEY VI AND R TYPE CARS.

The following Dunlop Tyre has now been approved for use on Bentley VI and R Type cars:-

6.50/6.70 x 16 (6 ply rating) Heavy Duty Gold Seal

This tyre employs a modern tread pattern utilising a synthetic tread compound on a rayon carcass and is available in black or white sidewall, tubed or tubeless construction.

The correct tyre pressures are:-

Bentley VI -
Chassis No. B-2-AK to B-601-FU

Front 25 lb/sq.in. (1.76 kg/sq.cm)
Rear 30 lb/sq.in. (2.11 kg/sq.cm) Cold.

Chassis No. B-1-GT to B-301-PU

Front 23 lb/sq.in. (1.62 kg/sq.cm)
Rear 30 lb/sq.in. (2.11 kg/sq.cm) Cold.

R Type -
all chassis

Front 24 lb/sq.in. (1.69 kg/sq.cm)
Rear 33 lb/sq.in. (2.32 kg/sq.cm) Cold.

The 6.50/6.70 x 16 (6 ply rating) Heavy Duty Gold Seal tyre now supersedes the 6.50 x 16 Fort 'C'. tyre which is no longer obtainable.

DUNLOP TYRE EQUIPMENT

FOR BENTLEY CONTINENTAL R TYPE CARS.

The following Dunlop Tyre has now been approved for use on Bentley Continental R Type cars:-

6.50/6.70 x 16 (4 ply) Dunlop Road Speed RS.4.

This tyre employs a modern tread pattern utilising a synthetic tread compound on a nylon carcass and is available in black or white sidewall, tubed construction only. It is quite suitable for the maximum sustained speed of which the car is capable.

The correct tyre pressures are:-

Front 30 lb/sq.in. (2.11 kg/sq.cm)
Rear 35 lb/sq.in. (2.46 kg/sq.cm) Cold.

The 6.50/6.70 x 16 (4 ply) Dunlop Road Speed RS.4. tyre now supersedes the 6.50 x 16 Dunlop Road Speed RS.3. which is no longer obtainable.

AVON TYRE EQUIPMENT FOR BENTLEY V1 AND 'R' TYPE CARS.

The following Avon Tyre has now been approved for use on Bentley V1 and 'R' Type cars :-

6.50/6.70 x 16 (6 ply rating) H.M. Ribbed Avon.

This tyre employs a modern tread pattern utilising a synthetic tread compound on a rayon carcass. It is available in black sidewalls only and is of tubed or tubeless construction.

The correct tyre pressures are :-

Bentley V1 -

Chassis No. B-2-AK to B-601-FU

Front 25 lb/sq.in. (1.76 kg/sq.cm.) Cold.
Rear 30 lb/sq.in. (2.11 kg/sq.cm.)

Chassis No. B-1-GT to B-301-PU

Front 23 lb/sq.in. (1.62 kg/sq.cm.) Cold.
Rear 30 lb/sq.in. (2.11 kg/sq.cm.)

'R' Type -

All Chassis.

Front 24 lb/sq.in. (1.69 kg/sq.cm.) Cold.
Rear 33 lb/sq.in. (2.32 kg/sq.cm.)

C

ALL FRANCHISE HOLDERS

CURRENTLY APPROVED TYRES

APPLICABLE TO:

All Rolls-Royce and Bentley motor cars from 1945.

INTRODUCTION:

This bulletin details currently approved tyres available for fitment to Rolls-Royce and Bentley motor cars from 1945 and supersedes all other tyre availability bulletins.

Car Type	Manufacturer	Construction	Sidewall	Size	Tyre/Marking	Note
All Rolls-Royce and Bentley motor cars from and including the following car serial numbers	Avon	Radial-ply rayon	Black/white	HR70 HR15	HR70/HR15 Radial T or 235/70 HR15 101H	Not for use in Kuwait, South Africa, USA or Canada
	Avon	Radial-ply steel	Black/white	235/70 HR15	RR Turbosteel 70 235/70 HR15 101H	
Silver Shadow SRC 18269 Bentley T SBH 18265 Long Wheelbase LRH 19577	Dunlop	Radial-ply steel	Black/white	235/70 HR15	SP Sport Dunlop Formula 70T/L 235/70 HR15 101H	
Corniche Convertible DRH 18563 Corniche Saloon CRH 18564	Dunlop	Radial-ply rayon	Black/white	HR70 HR15	SP Sport Dunlop Formula 70T/L	
Camargue JRH 14674	Dunlop	Radial-ply rayon (Winter) *	Black	205R15	Weathermaster SP44TT/L	
	Firestone	Radial-ply rayon	Black/white	HR70 HR15	Cavallino wide oval	Not for use in Australia, New Zealand or West Germany
	Michelin	Radial-ply steel	White	HR70 15	Wide x HR70 15	Only for use in USA and Canada
All Rolls-Royce and Bentley motor cars from and including the following car serial numbers up to the serial numbers quoted above	Avon	Radial-ply rayon	Black	205VR 15	Radial T rayon	Not for use in Kuwait, South Africa, USA or Canada
Silver Shadow and Bentley T SRH 13485 (including SRH 13066, SRH 12853, SRX 12687 and SRH 12586)	Dunlop	Radial-ply rayon	Black/white	205HR15	SP68 Rayon T/L	
	Dunlop	Radial/ply rayon (Winter) *	Black	205R15	Weathermaster SP44TT/L	
Long Wheelbase LRX 13201 (including LRH 13084) Corniche Convertible DRX 12734 Corniche Saloon CRH 12735 All cars from these car serial numbers must always be fitted with radial-ply tyre equipment.	Firestone	Radial-ply rayon	Black	205SR15	F100 Rayon	Not for use in Australia or New Zealand
All Rolls-Royce and Bentley motor cars prior to the following car serial numbers	Avon	Cross-ply nylon	Black	8.15 V15	R/R-B Nylon 6PR	Not for use in Kuwait, South Africa, USA or Canada
Silver Shadow and Bentley T SRH 13485 (except SRH 13066, SRH 12853, SRX 12687 and SRH 12586)	Avon	Radial-ply rayon	Black	205VR15	Radial T Rayon	
	Dunlop	Cross-ply nylon	Black	8.15 H15	Roadspeed RS5 Nylon 4PR T/L	
	Dunlop	Radial-ply rayon	Black/white	205HR15	SP68 Rayon T/L	
Long Wheelbase LRX 13201 (except LRH 13084)	Dunlop	Radial-ply rayon (Winter)*	Black	205R15	Weathermaster SP44TT/L	
Corniche Convertible DRX 12734 Corniche Saloon CRX 12735 (see Note 2)	Firestone	Radial-ply rayon	Black	205SR15	F100 Rayon	Not for use inAustralia or New Zealand
Rolls-Royce Phantom V and Phantom VI	Dunlop	Cross-ply nylon	Black	8.90S15	Fort nylon 8PR WH4T/L	

ALL COMMUNICATIONS SHOULD BE ADDRESSED TO
BENTLEY MOTORS (1931) LTD. PYMS LANE CREWE ENGLAND

© Rolls-Royce Motors Limited 1979

Car Type	Manufacturer	Construction	Sidewall	Size	Tyre/Marking	Note
Rolls-Royce Silver Cloud I, II, III and Bentley S1, S2 and S3	Avon	Cross-ply nylon	Black	8.20 V15	Avon Turbospeed R/R -B nylon 6PR T/L	Not for use in Kuwait, South Africa, USA or Canada
Standard (123" and 127" wheelbase) and HJ. Mulliner drophead coupe (excluding Rolls-Royce coachbuilt Silver Cloud II and III and Bentley S1, S2 and S3 continental)	Dunlop	Cross-ply nylon	Black	8.20 H15	Fort 4PR WH4 T/L	
Bentley continentials S1 (December 1957 onwards) Bentley S2 and S3 continental. Rolls-Royce coachbuilt Silver Cloud II and III (excluding HJ. Mulliner drophead coupe)	Dunlop	Cross-ply nylon	Black	8.00 15	Roadspeed 6PR RS5 nylon	
Bentley S1 continental (up to December 1957)	Dunlop	Cross-ply			To be issued at a later date	
Rolls-Royce Silver Dawn Bentley MK VI Bentley R Type	Dunlop Dunlop	Cross-ply nylon Cross-ply rayon (Winter)	Black Black	6.50/6.70 16 6.50 16	Roadspeed 6PR RS5 nylon T/L RK 3A 6PR T/T	
Bentley R Type sports continental (dependant upon chassis numbers see note 3)	Dunlop Dunlop	Cross-ply nylon Cross-ply rayon (Winter)	Black Black	6.50/6.70 16 6.50 16	Roadspeed 6PR RS5 nylon T/L RK 3A 6PR T/T	
Rolls-Royce Phantom IV (see Note 4)	Dunlop	Cross-ply nylon	Black	8.00 17	Fort A 8PR Nylon B5T	
Rolls-Royce Silver Wraith (dependant upon chassis number see Note 5)	Dunlop	Cross-ply nylon	Black	6.00/6.50 17	Fort C 6PR F4T T/T	

Notes

1. Tyres marked * indicates tread pattern to accept ice studs
2. Prior to the following car serial numbers only tubed radial tyre equipment should be fitted.
   Silver Shadow SRX 6752
   Bentley T SBH 5572
   Coachbuilt CRH 6760
   Long Wheelbase LRX 6744 (except LRX 6712, LRX 6714 and LRX 6720).
3. Bentley R type sports continental motor cars Certain cars fitted with 6.70 17 tyres.
4. 8.00 17 tyres - at least six months notice of any requirements is requested by the manufacturer.
5. 6.00/6.50 17 fitted to WTA1 to WME96.
   6.00/6.50 17 or 7.50 16 fitted to WVH116.
   All other series fitted with 7.50 16 Dunlop 6PR Nylon T/L D2/103.

T784

ALL COMMUNICATIONS SHOULD BE ADDRESSED TO
BENTLEY MOTORS (1931) LTD. PYMS LANE, CREWE, ENGLAND

TYRE SIDEWALL MARKINGS

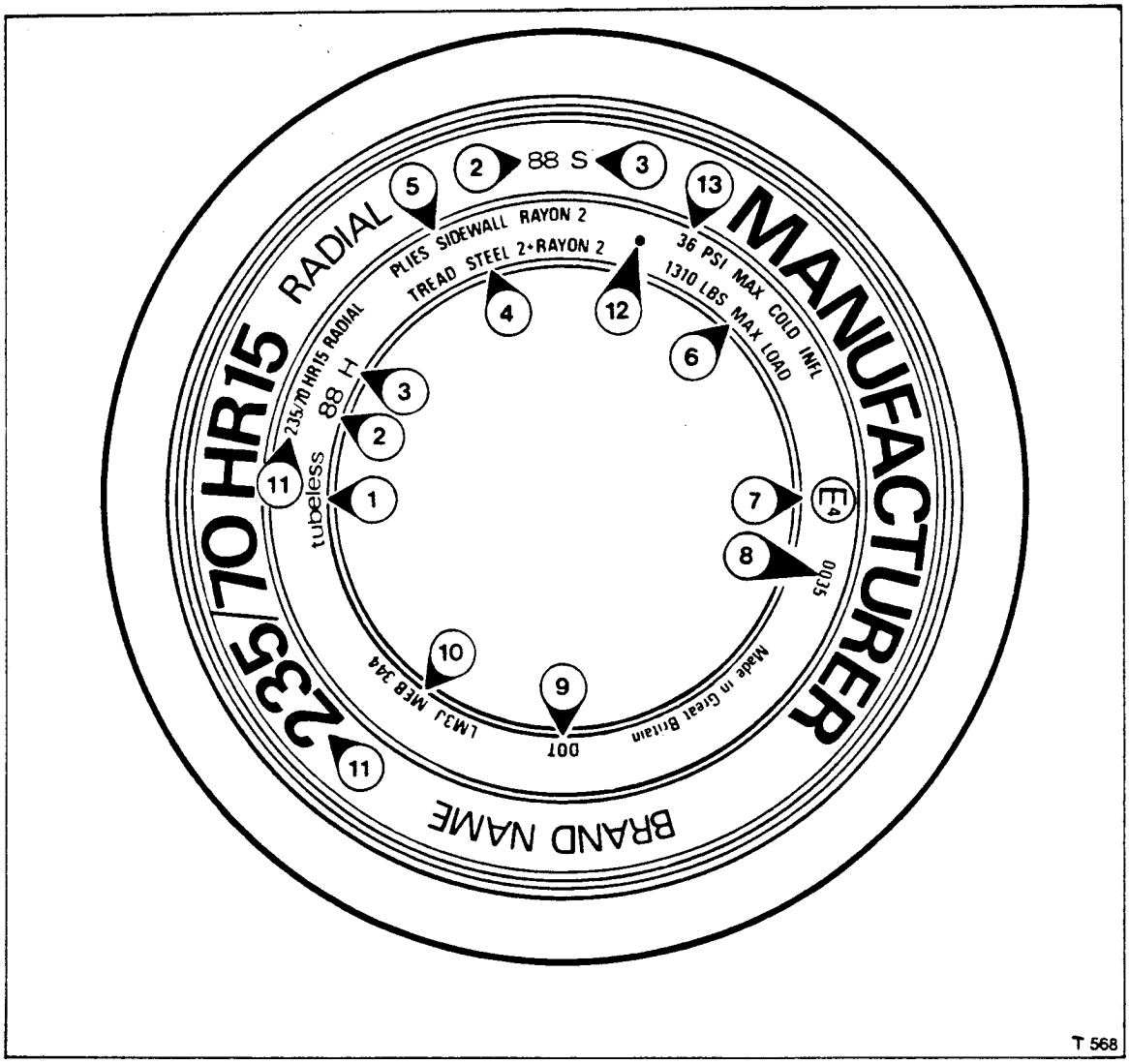

T 568

The above drawing identifies the codes or letters that appear on the sidewall of a tyre.

1 Tube or tubeless.

2 88 is the load indicator (as specified by the European standards) referring to the maximum load per wheel.

3 S refers to the speed rating. S max speed 113 mph H max speed 130 mph V over 130 mph.

4 Material and number of casing and tread plies: tread two steel belts and two layers of rayon.

5 Sidewall plies: sidewall two layers of rayon.

6 1310 lbs maximum load: this is the maximum load in lbs per wheel.

7 & 8 This is the certificate of approval in accordance with Economic Commission for European Standards. The figure identifies the country in which approval was given - 4 is Holland.

9 DOT stands for Department of Transportation (the United States Federal Transport Authority), certifying that the tyre conforms to US specifications.

10 Manufacturer's coding: LM is the factory, MEB is the type code, 3J is the size code and 344 is the date code.

11 Size designation 235 refers to the width of the tyre in millimeters. 70 refers to the tyre profile and means that the tyre side wall height is 70% of the tyre width. H is the speed rating - 130 mph. R is for radial and 15 is the rim diameter in inches. In addition the word 'Radial' follows, referring to the tyre design.

12 Force variation low spot (see note at the bottom of this section).

13 36 PSI Max cold Infl.,this is the maximum inflation pressure when cold and expressed in lbs per square inch.

POINT OF FIRST HARMONIC OF RADIAL FORCE VARIATION - SEE NO 12

AVON

Avon tyres supplied for service replacement are marked with a GREEN spot to indicate the force variation low spot. When fitting the tyre to a wheel rim the GREEN spot must be positioned adjacent to the letter 'H' stamped in the well of the wheel rim to ensure optimum harmonisation of the wheel and tyre assembly.

MICHELIN

To be fitted as above if supplied with a GREEN spot. If the tyre is supplied with a WHITE spot the tyre should be fitted to the wheel rim with the WHITE spot 180° opposite to the letter 'H' stamped in the well of the wheel rim.

DUNLOP

The radial force variation low spot colour has changed from RED to GREEN from November 1978. The same fitting procedure should be adopted as that instructed above for Avon tyres.

© Rolls-Royce Motors Limited 1979

STONE GUARDS ON REAR WINGS AND SILL.

Moulded rubber stone guards on the front of the rear wings and the rear end of the sills are now a standard fitment. Some cars may not have been fitted with them, in which case they may be fitted on request. In such cases they may be obtained in sets from Hythe Road Service Station together with the requisite quantity of the materials necessary for affixing them.

To fit the stone guards, first, accurately align the front edge, and with the guard pressed tightly to the wing, mark out the outline. Remove the guard, and thoroughly clean and degrease the paint using a reliable agent, trichlorethylene being the most satisfactory. Brush on a thin even coat of Bostik Company's Primer 81-15 and allow this to dry for 1¼ hours, taking precautions to keep it free from dust. Rice paper if available, will not permanently adhere and is an excellent cover.

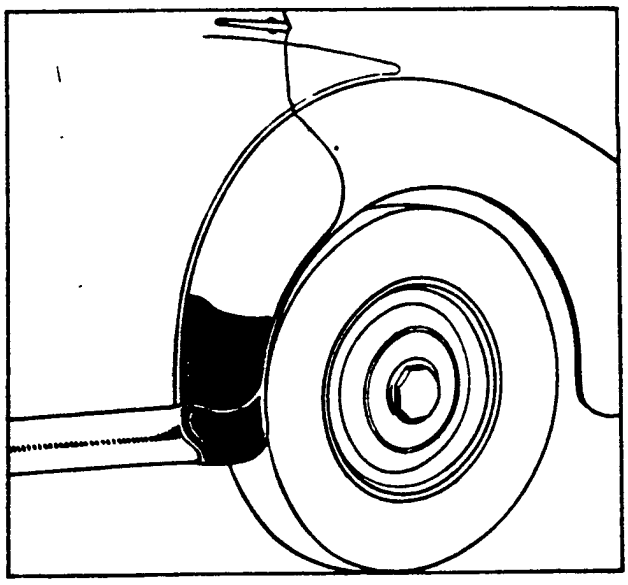

STONE GUARD IN POSITION.

Next roughen the inner surface of the rubber using No.2 emery cloth or similar means. Mix thoroughly together the quantities of Bostik Company's Cement Boscroprene 2400/1 and 2400/2 as supplied, and applying one coat evenly to both the rubber and the metal, allow to dry for 45 minutes. Note that when mixed, the cement will last only 24 hours, therefore mix only the necessary amount.

When applying the rubber to the metal after the requisite drying period, tack the front top corner in position, gently align the front edge, and when sure of the position, firmly press it home. Then work from front to rear with a roller keeping the top edge in line with the marking out, and squeezing out any wrinkles and air bubbles. The cement can be wiped clear of any paint which has not been affected by the primer, even after it has set.

The Part Numbers of the Guards are:-

Rear Wing, L.H.	RB. 3525
Rear Wing, R.H.	RB. 3524
Sill, L.H.	RB. 3827
Sill, R.H.	RB. 3826

STONE GUARDS ON REAR WINGS AND SILL

AMENDMENT.

As the Bostik Company's preparations mentioned in Service Bulletin BB-3 are suited only for factory use where it is possible to handle a number of cars simultaneously, an alternative procedure is desirable when dealing with odd cars.

In these instances Bostik C adhesive No.252 is recommended. This can be supplied in 8-oz. tubes. sufficient for fixing one set of Stone Guards.

No primer is needed, but the wing and sill surfaces must be thoroughly cleaned and degreased, after which a thin coat of No.252 adhesive is applied to both metal and rubber, the latter being previously roughened.

The coated surfaces must be allowed to dry for 45 minutes before fixing.

FRONT SEATS - BENTLEY STANDARD SALOON.

There have been one or two instances where the front seats have split at the rear corners where the top leather is stitched to the side panel. The reason for this is that the side leather is anchored to the back of the seat on the outside of the framework and cannot flex inwards sufficiently to follow up deflection of the top leather.

An alteration has therefore been made as shown in the drawing herewith. It will be seen that the side wall is now detached from the back and is passed inside the tubular strut. This alteration can be applied to existing seats in the event of any complaint of splitting.

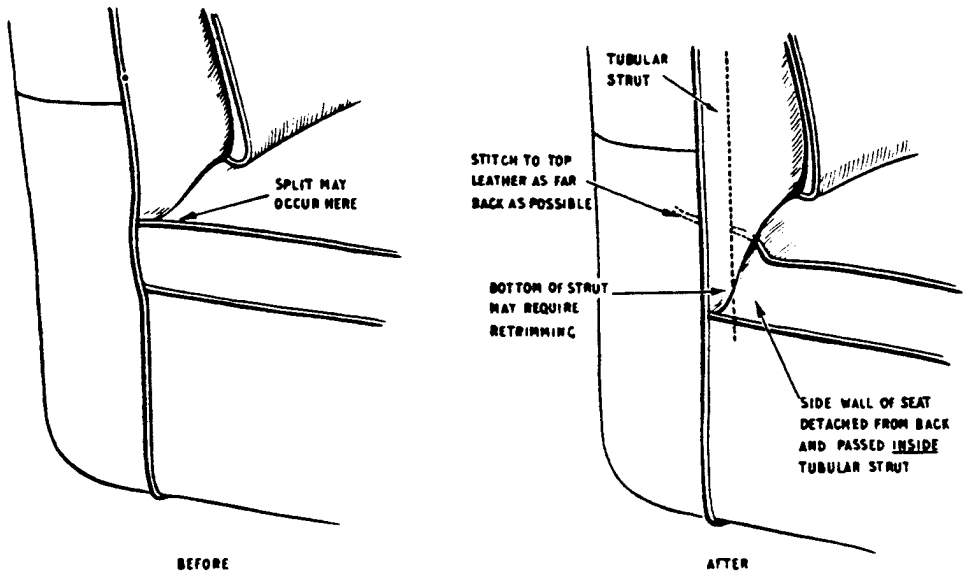

The procedure to adopt is as follows:-

1. Remove seat back millboard with carpet and hide.

2. Take side wall of seat cover inside the tubular strut and "french" securely to the top of the cover and piping. (This will allow the side wall to flex with the seat cover instead of being constrained by the tubular strut.

3. It may be found necessary to cut a small portion of surplus hide from the rear of the cushion cover to enable you to cover a portion of bare tube which may be left exposed. This is only a matter of an inch or so of hide and may not be necessary in all cases.

4. Replace the millboard seat back together with the carpet, using the same seat back hide which is also refrenched round the top edge of the seat back.

MODIFICATION.

FRONT WING MUD FLAPS.

Front wing mud flaps are now fitted to all cars being manufactured with Bentley standard coachwork.

Prior to this modification, a few cars have been delivered for service on which mud flaps were not fitted, and Retailers are advised that modification sets are available on application to this Service Depot should owners of these cars wish to have them fitted.

The mud flaps are fitted to the rear underside of the front wings, the method of attachment being by angle plates and 2-BA bolts and nuts, the positioning of these may be noted from the attached drawing.

Would Retailers kindly inform this Service Depot concerning chassis numbers of individual cars on which they carry out this alteration.

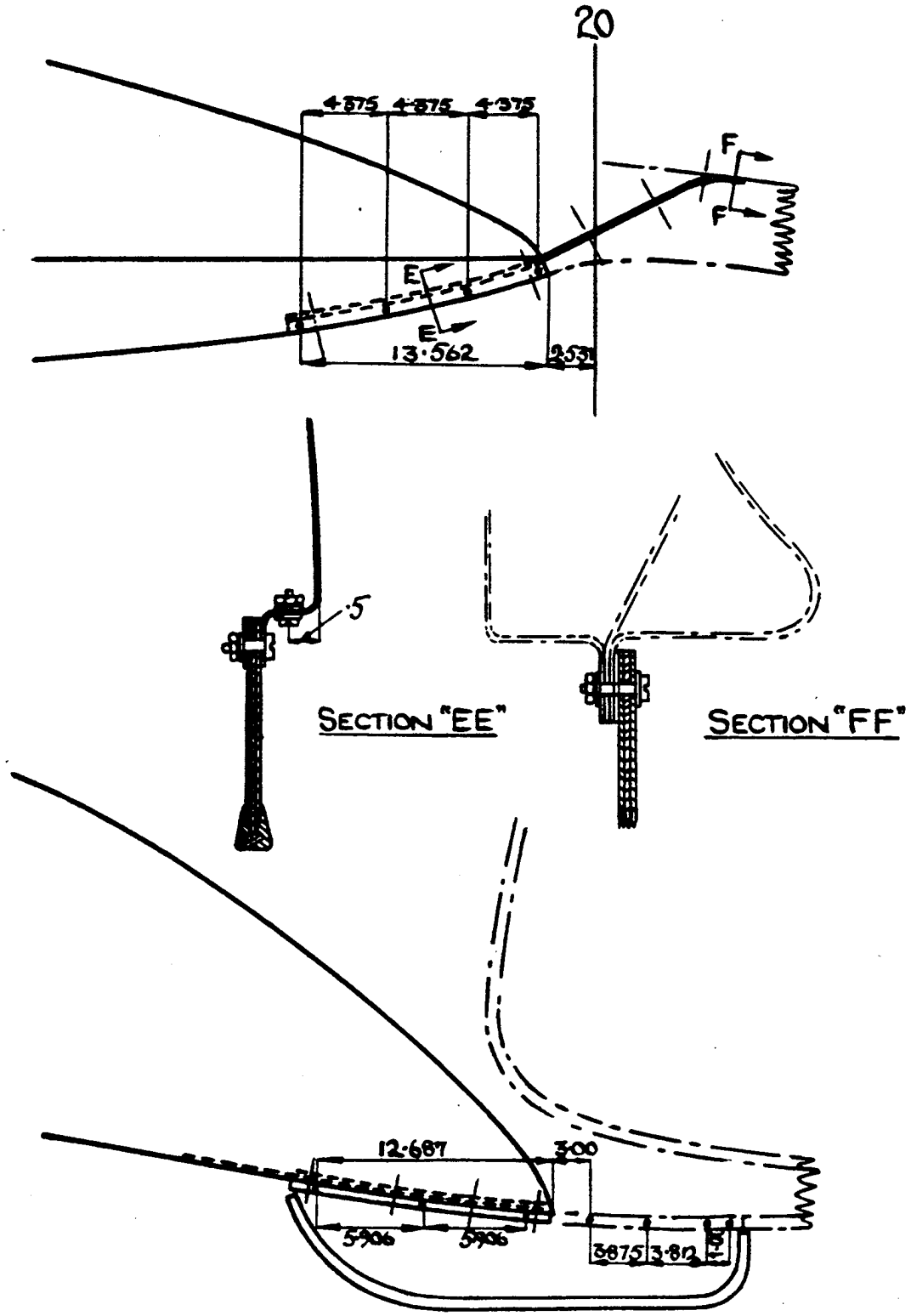
20
4·375
4·375
4·375
F
F
E
E
13·562
2·531
·5
SECTION "EE"
SECTION "FF"
12·687
3·00
5·906
5·906
3·875
3·812

MODIFICATION.

FOR CATEGORY 2 ACTION:

DOOR STRIKER PLATES.

A modification has been introduced to provide an improved type of striker plate for the door locks of the Bentley Standard Saloon. The modified door striker plate embodies a solid safety catch in place of the spring loaded safety catch in the original fitting.

This alteration will now be incorporated on all Standard Saloons. On earlier models, the modified striker plate should be fitted retrospectively when cars become available at service stations.

Arrangements have been made for a number of the new striker plates (Part No.RB-4228) to be forwarded to Retailers who have Bentley Standard Saloons in their area. In the event of further supplies being necessary, they may be obtained from the London Service Depot.

WATERPROOFING OF SCUTTLE TYPE VENTILATOR.

CATEGORY:3A.

The following description of a method of improving the sealing of the scuttle ventilator is provided for the information of Retailers, so that action may be taken in cases of complaints of leaks.

Briefly, this consists of fitting a new rubber seal, smoothing off with paint fillers etc. the underside of the ventilator lid which contacts the rubber seal, and then, very carefully re-assembling the ventilator to ensure 100% contact with the rubber seal when in the closed position.

New rubber seals (Part No:RB-2514) are obtainable from Hythe Road Service Station.

The recommended procedure is as follows:-

(i) Detach the instrument panel from its mounting by first removing the wood facia which is retained by three screws at the top, and two screws along the bottom edge, and then remove the screws securing the instrument mounting plate. The mounting plate together with the instruments can then be pulled clear sufficiently to gain access to the underside of the ventilator. It will now be possible to disconnect the operating lever from the ventilator, by removing the small bolt and the two locknuts.

(ii) With the ventilator in the open position, remove the two screws which are fitted at each side of it (and accessible from outside the car) and then lift off the ventilator.

(iii) Remove the existing rubber sealing strip which has probably become flattened in places, and then check that the water drain pipe from the ventilator trough is free from obstruction. If there is a partial blockage, it may be due to an excessive quantity of adhesive being used for sticking the rubber drain pipe in position. The rubber drain pipe can be removed in order to see if this is the trouble. When refitting the pipe, it is not necessary to use an adhesive.

(iv) Stick the new rubber sealing strip in position with Bostik or other suitable waterproof adhesive. This operation will have to be very carefully carried out, as it is possible to stick the rubber in position in such a way that the lip is level with the main body of the seal instead of sticking up above it. (See illustration) Also, before allowing the adhesive to set, make sure that the rubber is so positioned that it will contact the lip of the ventilator all the way round. This can easily be checked by placing the ventilator in position and then trying to rock it.

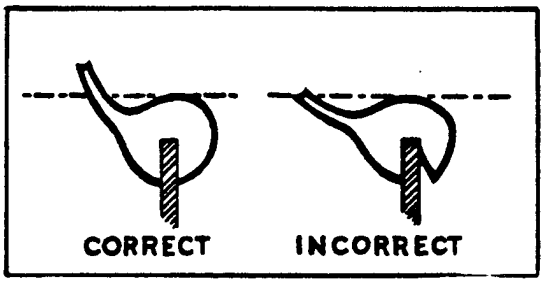

Section through rubber seal, showing correct methods of sticking seal in position.

(v) Examination of the underside of the lip of the ventilator will show that there are depressions at each corner caused by the cut-away of the sheet metal before turning over the lip. These depressions prevent a good seal being made with the rubber, so it will be necessary to fill them in with paint fillers in order to make the surface smooth and flat.

(vi) When refitting the ventilator, great care should be taken to ensure that it is accurately positioned in relation to the rubber seal before the four screws which secure it to the hinge are tightened. These screws pass through clearance holes which allow a limited amount of adjustment to the position of the ventilator, thus enabling an even pressure on the rubber seal to be obtained in the closed position.

It is recommended that a test is carried out by pouring water over the ventilator in order to check that an effective seal has been obtained.

Will all Retailers kindly notify this Service Station of the Chassis Nos. of cars on which this work is carried out.

FOR INFORMATION:

SUN VIZOR BRACKETS.

This Bulletin is issued for guidance in adjusting sun vizor hinges which are either too tight to operate or have worked loose.

The illustration shows an exploded view of the assembly, and adjustment should be made as follows:-

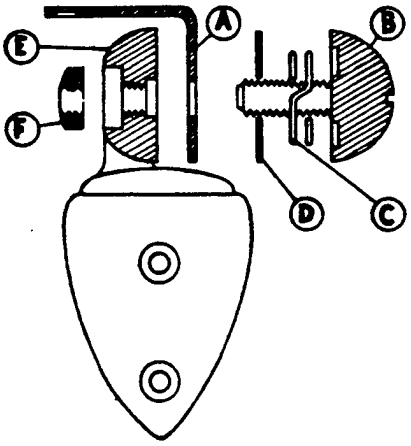

A. STATIONARY BRACKET.
B. ADJUSTABLE SPINDLE.
C. THACKERY WASHER.
D. BRASS SLIPPING WASHER.
E. NUT FOR SPINDLE
F. LOCK NUT.

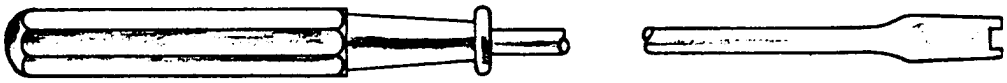

TOOL FOR ADJUSTING LOCK NUT 'F.'

1. With the lock nut (F) loose, screw in B as far as it will go. This should completely lock the assembly.

2. To obtain the correct amount of friction, unscrew B slightly, the precise amount can be determined by testing the movement of the vizor, but it will be approximately $\frac{1}{4}$ turn. Tighten the lock nut with a forked screwdriver as tightly as possible.

3. Increase the locking action by further unscrewing B very slightly, at the same time turning the lock nut with it. The friction of the bolt and nut thread is thus used to help the lock nut to tighten up an extra fraction of a turn against E.

The brass washer D may not always be found on early chassis Nos. and if this is the case, a similar washer should be fitted about .025" thick. This prevents the end of the Thackery washer C from biting into the bracket.

All replacement Sun Vizor hinges are supplied with this washer fitted.

DOOR SEALS - OUTER

INTRODUCTION OF NEW TYPE.

FOR INFORMATION:

A new type of sealing rubber for the outer edge of all doors in the standard saloon has been developed, and it is desired to fit this new seal to customers' cars if trouble with the existing seals is encountered.

The new seal is a very soft, white, sponge rubber, roughly triangular in section, as shown at 'A' on the diagram and the apex of the triangle forms the contact point for the door, except in the special instance of the trunk door (see later). Owing to its spongy nature, the rubber is very susceptible to oil or grease.

The seal is held in position by the ordinary Bostik 'C' adhesive No.252, and it is essential when applying to make sure a liberal quantity enters the groove in the base of the seal. The adhesive should be applied both to the seal and to the channel in the body which is to receive the seal. The best results are obtained if the adhesive is allowed to get tacky before finally pressing the two surfaces together.

When applying the rubber to the main doors, start at the centre post at the top corner (C) where a mitre joint is essential, then work downwards a short distance at a time, making sure that the apex of the section is lying in a straight line, owing to the extreme flexibility of the rubber this requires care. Only right-angle bends need a joint as the rubber will accommodate the others. The action of the door shutting tends to push the seal sideways, particularly on the length above the top hinge on the centre door post, so it may be found necessary to reduce the volume of the rubber by cutting a thin layer off the base of the triangular section with a pair of scissors. This operation must be carried out before the adhesive is dry and the seal must be pulled away carefully as it readily tears.

The lower edge of the trunk door (D) which makes a joint with the upper edge of the spare wheel compartment lid requires the special treatment shown on the diagram whereby the rubber is applied lying sideways, as there is insufficient room for the rubber to be applied normally if the spare wheel compartment lid is to shut properly.

Although the new rubber has greater flexibility than the old (B), it may be necessary to adjust the door striker plates to obtain good matching of the doors with the body shell and a good door shutting action.

Existing seal:-	Part Number	RB 2550				
New seals:-	Part Number	RB 4357	Front door, outer,	2 off.	length	108"
	" "	RB 4358	Centre post, centre	4 "	"	16"
	" "	RB 4359	Centre post, lower	4 "	"	10"
	" "	RB 4502	Centre post, upper	4 "	"	24"
	" "	RB 4360	Rear door, outer	2 "	"	111"
	" "	RB 4361	Trunk door, upper,	1 "	"	74"
	" "	RB 4362	Trunk door, lower,	1 "	"	40"
	" "	RB 4363	Spare Wheel, door,	1 "	"	64"

Adhesive:- Bostik 'C' No:252

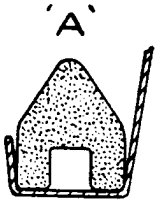

NEW SEAL NORMALLY APPLIED

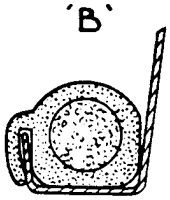

EXISTING SEAL

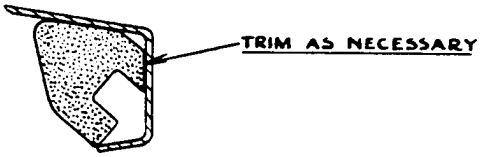

NEW SEAL LYING SIDEWAYS AS APPLIED TO TRUNK DOOR, EDGE 'D'

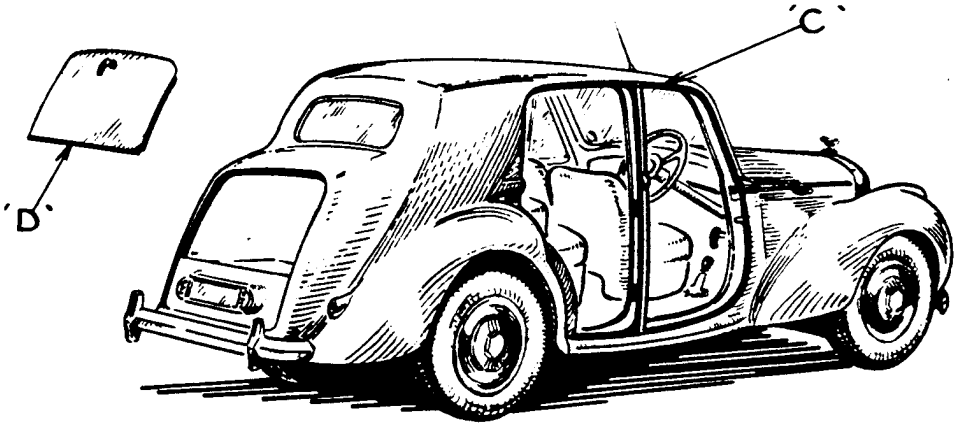

FOR INFORMATION:

CUTTING OF DOOR SEALING RUBBERS.

Cases have occurred in wet weather where drain water from the doors has "built-up" on top of the lower door sills of Standard Saloons.

Investigations have shown, that in all these cases, the cars concerned were fitted with the later type soft sponge, triangular section door sealing rubbers, and that the natural tendency for this sponge rubber to spread rendered it impossible for the waste water to drain away while the doors were closed.

In order to compensate for this tendency to spread, and at the same time provide adequate means for drainage during wet weather. all current Standard Saloons in production have the bottom sealing rubber along the outer edges of the sills "cut back", leaving a gap of approximately ¼" at the point of juncture with the vertical sealing strip at the foot of the centre door pillars as shown in the attached sketch.

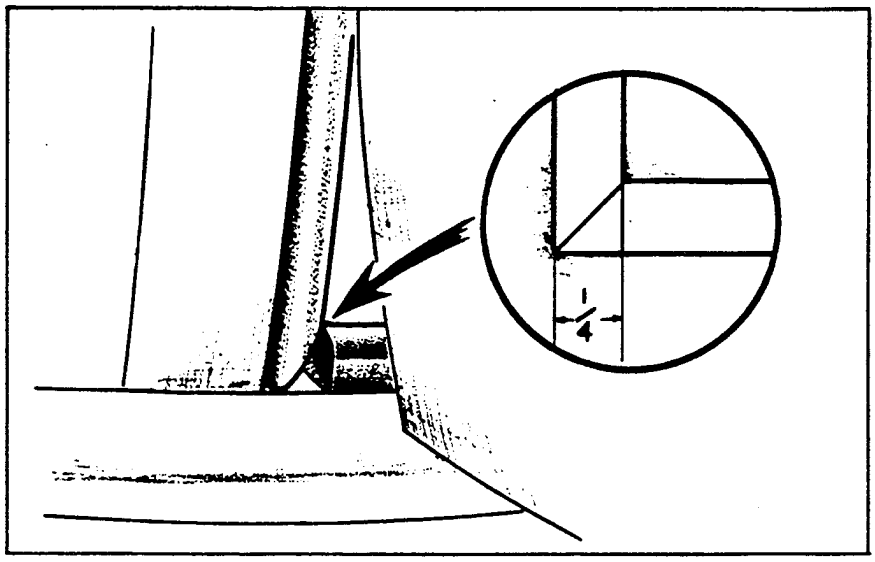

Retailers are advised. therefore, when dealing with complaints of such a nature from owners of earlier models of Standard Saloons, to cut the existing lower door seals to conform with the current procedure.

MODIFICATION

FOR CATEGORY 1 ACTION

DOOR STRIKER PLATES

The original spring loaded door striker plates have been the subject of modification action under Service Bulletin BB-30, whereby a solid striker plate was fitted on a Category 2 basis. At the same time, these striker plates were introduced on cars at the factory prior to delivery.

The safety catch on the solid striker plate is rather shallower than on the spring loaded catch, and it has been discovered that owing to variations in the projection of the bolt, the depth of engagement on the safety catch may not be quite sufficient, although there is in every case adequate engagement with the main catch when the door is closed.

It has been decided to check all cars fitted with solid striker plates, and if necessary increase the depth of engagement of the bolt, by suitable packing of the striker plate.

Will Retailers please take immediate Category 1 action to inspect all cars in their territory for this feature. The correct procedure for checking and correction is as follows:-

(i) Check the amount of free movement of the external handle before moving the bolt when the door is open.

(ii) Close the door on to the safety catch only.

(iii) Check the free movement of the handle before moving the bolt. This must be at least ¼" more at the end of the handle as compared with the door open free movement.

(iv) If this free movement is not obtained in the safety catch position, pack out the door striker plate suitably.

(v) Aluminium packings, RB.4705, 1/10" thick are in course of manufacture, and will be available in the near future. In the meantime, will Retailers make suitable packings from sheet aluminium.

(vi) It is permissible to fit two packings if necessary to obtain the conditions described above, making a total thickness of packing of .200".

(vii) Inform this Depot of all chassis numbers attended to.

(viii) New cars delivered subsequent to the date of issue of this Bulletin will have been attended to.

(ix) The substitution of solid striker plates for the original spring loaded striker plates will continue on a Category 2 basis as already instructed under Bulletin BB-30. The above adjustment, will, of course, have to be carried out at the same time.

(x) Certain cars may be found to have fibre packings behind the striker plate. These should be removed and aluminium packing substituted.

In addition, it may be necessary to pack out the male portion of the door dovetail. In this case, the amount of engagement can be determined by visual examination, since there will be a distinct marking on the wedge. If the engagement is less than 3/16", a packing, similar to that used on the striker plate should be fitted under the dovetail.

FOR INFORMATION:

FITTING LOCKS TO BONNET
STANDARD STEEL SALOON.

This Service Bulletin supersedes Bulletin No.BB-57 (Section U) dated the 25.10.48, which should be destroyed.

The following information is given for the assistance of Retailers who may be requested by an owner to fit locks to the bonnet of his car.

PARTS REQUIRED:

Part No.	Title.	No.Off.	Part No.	Title.	No.Off.
E-56084	Lock(Vaughan)	2	K-4103	Nut.	6
R-4041	Socket plate.	2	CS-30077	Screw.	8
RE-4903	Cover plate.	2	CS-30975	Nut.	8
RE-4862	Bolt.	6	CS-6728	Washer.	8
RE-4860	Distance piece.	2	CS-35081	Split rivet.	4
K-9003N	Washer.	6			

FITTING INSTRUCTIONS:

Note: The datum line for marking off purposes is the centre line through the centre of the shank of the bonnet handle as shown in Figs. 1 & 2.

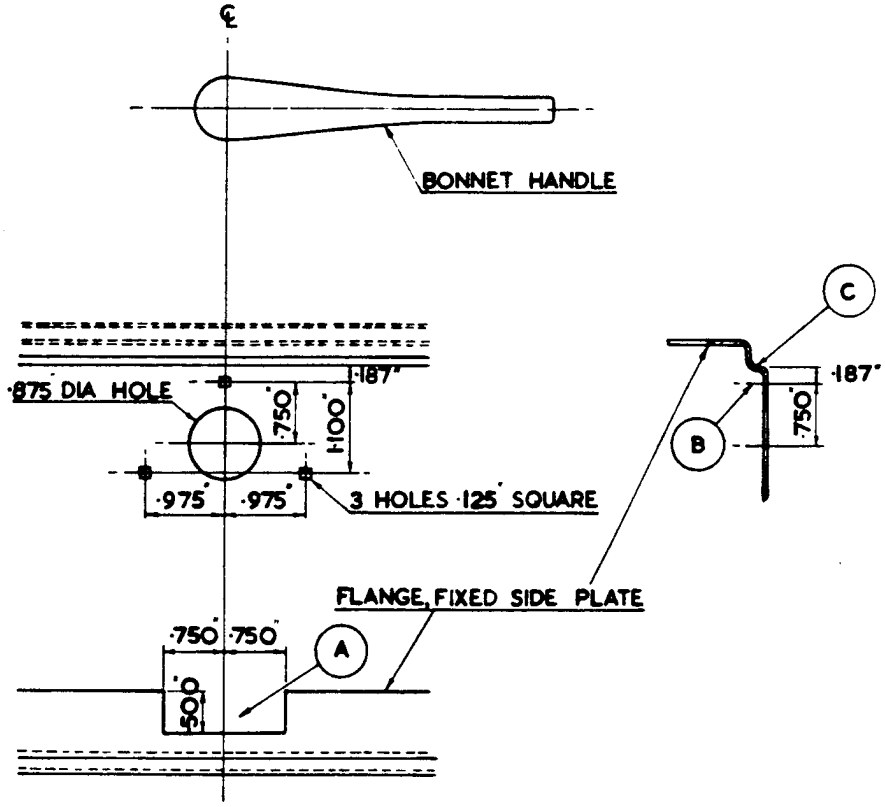

FIG. 1. DRILLING INSTRUCTIONS - BONNET LOCK.

(i) Cut a slot, 'A' Fig.1, in the flange of the fixed side plate as shown.

(ii) Mark off and drill the fixed side plate as shown in Fig.1. It is important that the 0.187" dimension (from the ledge 'C', of the side plate to the centre line 'B') should be adhered to closely to ensure that the distance piece (5) & lock are located as high as possible inside the fixed side plate as shown at point 'A' Fig.2.

(iii) Lightly radius the distance piece at point 'A' (Fig.2) and with it in position on the lock, temporarily fit the lock to the side plate and check for being square. The three square holes may be trimmed slightly to provide adjustment.

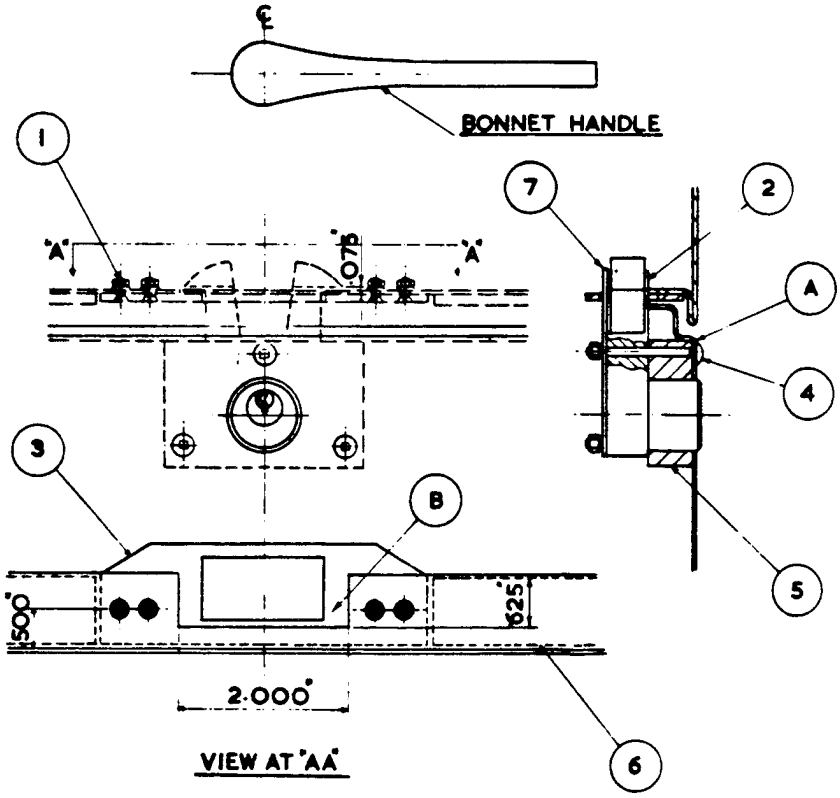

FIG. 2. ARRANGEMENT OF BONNET LOCK.

(iv) Check that there is a clearance of approximately 0.062" between the face of the lock and the slot in the flange.

(v) Fit the lock assembly and repeat for the opposite side.

(vi) Remove the bonnet and cut away the bonnet rest tape on the flange 2.500" either side of the centre line, leaving a gap 5.000" wide to accommodate the lock socket plate (3 Fig.2).

(vii) Cut a slot 'B' Fig.2, in the flange of the bonnet as shown.

(viii) Place the lock socket plate on to the flange. With the plate correctly centered and bearing against the side of the bonnet, drill four holes 0.125" diameter in the flange, using the plate as a template. Fit the plate. Drill a further hole 0.125" diameter and fix the loose end of the tape with a split rivet.

NOTE: When the lock and its socket plate have been fitted, there should be a clearance of not less than 0.075" between the jaws of the lock and the socket plate as shown in Fig.2. With the bonnet handle in the open position and the bonnet locked, check for this clearance by lifting the bonnet. If there is insufficient clearance, then a thin packing plate may be fitted between the plate and the flange.

It is important however, that the socket plate remains below the surface of the tape, i.e. it must not make contact with the flange of the fixed side plate, otherwise the bonnet will rattle.

(ix) Repeat for the opposite side.

FOR INFORMATION:

REAR WING FAIRINGS.

Rear Wing Fairings are now available for fitting to models of the Bentley Mark VI Standard Saloon car already in service as a chargeable improvement.

Fig. 1, shows the finished appearance of a rear wing with a fairing fitted.

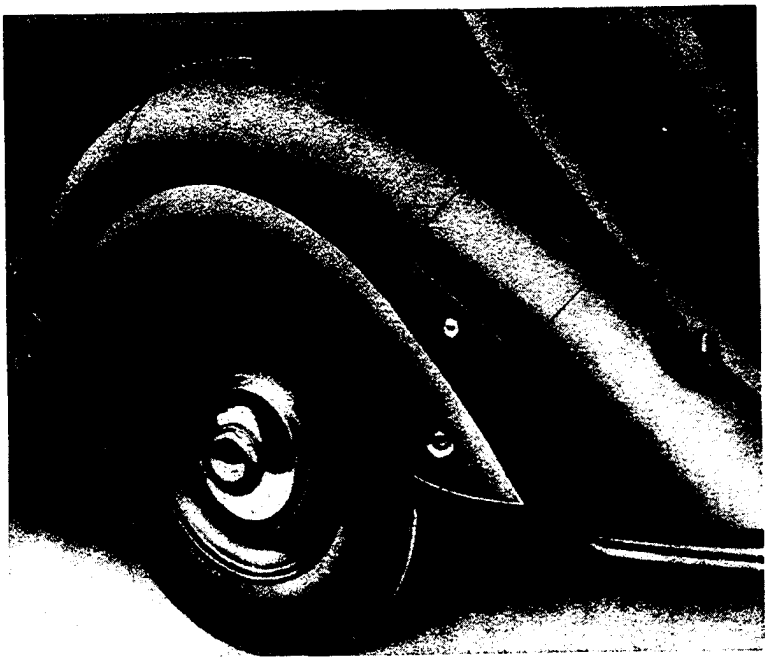

FIG. 1.

When these panels are fitted, removal will only be necessary for major repair work on the rear of the car. When the car is lifted on the jack provided, the rear suspension allows the wheel to drop sufficiently to give ample clearance to remove the wheel with the wing fairing in position.

The wing fairings are supplied finished in primer and must be sprayed to match the finish of the coachwork when fitting is completed.

PARTS REQUIRED:

Part No:	Title:	No. Off:
RB.4476A	Panel assembly. R.H.	1
RB.4477A	Panel assembly. L.H.	1
RB.4484	Escutcheon - Panel.	2
RB.4485	Bolt - Panel to rear wing.	2
RB.4486	Boss - Rear wing.	2
RB.4487	Washer - Escutcheon.	2

RB-4488	Securing ring - Escutcheon.	2
RB.4489	Securing ring - bolt.	2
RB.4504	Tongue(Dowel) - detachable panel.	4
RB.4506	Striker plate - tongue.	2
RB.4508	Striker plate - tongue.	2
RB.4510	Fixing strip - Rexine piping.	2
RB.4514	Rexine Piping - panel R.H.	1
RB.4515	Rexine piping - panel L.H.	1
KB.2462	Rivet - Striker plate.	16
CS.35206	Rivet - Tongue (dowel)	12
CS.35060	Rivet - fixing strip.	50

GENERAL:

When fitted, the wing fairing is secured at three points as shown in Fig. 2. Items 'A' and 'B' are tongue and slot fittings, tongues being fitted

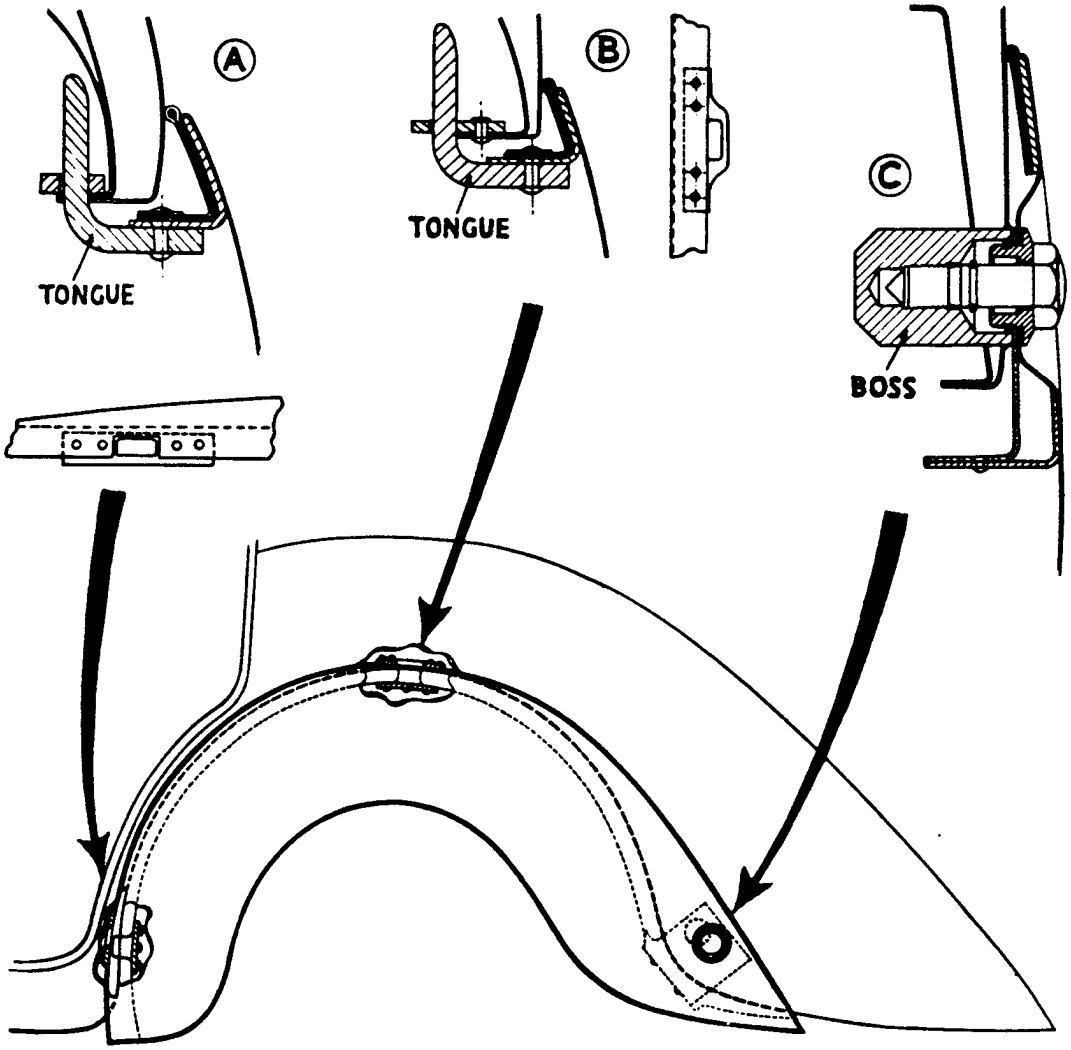

FIG. 2.

to the wheel fairing and slotted plates to the wing lip (flange). A sectional diagram of each fitting is also shown, together with the position of the slotted plates riveted inside the wing lip. The rear end of the fairing ('C') is secured by a bolt screwed into a threaded boss in the wing.

PROCEDURE FOR FITTING REAR WING FAIRINGS:

The following instructions and all diagrams dealing with this procedure are in respect of the left-hand side wing fairing to simplify descriptive matter. As both fairings and wing modifications are symmetrical, these instructions are therefore also applicable for the right-hand side of the car.

(i) Jack up the rear of the car, remove the wheel and clean the inside of the wing.

(ii) Mark off positions of 'A' and 'B' tongue centres on the outer edge of the wheel fairing as shown on Fig. 3. 'A' centre should be 4.000" from the bottom of the leading edge and 'B' centre equidistant from 'A' and 'C' centres on the outer edge of the fairing.

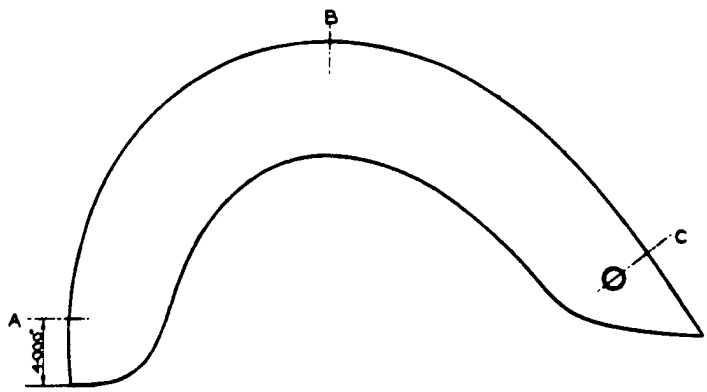

FIG. 3.

(iii) Clamp the fairing into position on the wing. This should be such that both front and rear bottom edges blend into the wing and sufficient clearance given for the opening of the door i.e. the door must be clear of the beading of the Rexine piping when the latter is fitted to the fairing. The fitting of the piping is described in paragraph vi. Mark off the tongue centres on the lip inside the wing.

(iv) Remove the fairing. Rivet the slotted striker plates in position on the inside wing lip - centres of slots to correspond with tongue centres. The rectangular striker plate is to be fitted in the forward position ('A' Fig.2) and as far inwards as the contour of the inner skin of the wing will allow.

Part of the wing lip must be cut away to allow clearance around the slot in the striker plate (see 'A' Fig.2). This plate is slightly curved to follow the wing form, and the rivet holes are offset to allow the rivets to be fitted well inside the lip of wing. The position of the striker plates on the wing lip is also illustrated in 'A' and 'B', Fig. 2.

(v) Rivet the tongues on to the stiffening web of the fairing. The sectional illustrations in Fig. 2 show the method of fixing. Before carrying out this operation, it is advisable to again clamp the fairing into position on the wing and re-check the tongue centres and ascertain the exact position to fit the tongues on the stiffening web to give a snug fit to the fairing when finally fitted.

NOTE: The fairing when clamped into position prior to fitting the tongues to it, should be a good flush fit against the wing and no gap should be left for the thickness of the Rexine piping. The tongues should be fitted so that the fairing is a good bump fit by hand with the piping fitted. If slacker, the fairing will rattle when finally assembled to the wing.

(vi) Cut a series of vee's in the Rexine piping to prevent puckering and to enable it to be evenly placed on the inside of the fairing and on the stiffening web. The vee's should be cut about two inches apart from one another and up to approximately $\frac{3}{8}$" from the beading of the piping.

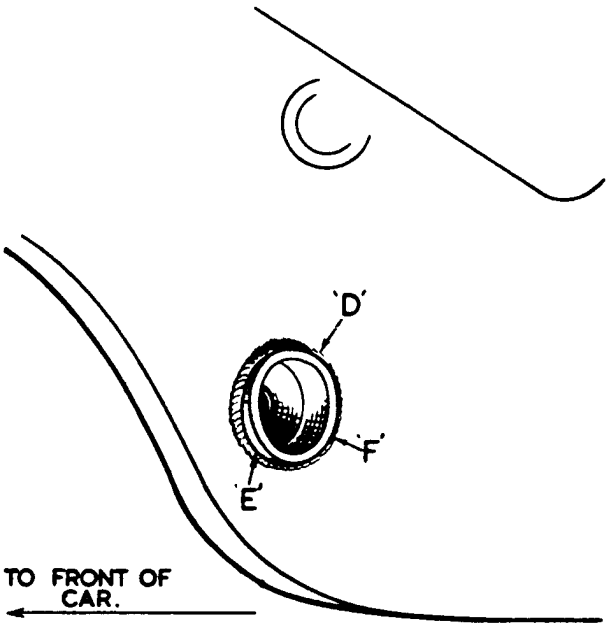

FIG. 4.

Apply Bostik or a similar adhesive to that side of the piping which fits against the fairing. Place it in position on the fairing, with the beading projecting just above the outer edge as shown in 'A' and 'B', Fig.2. The pipings are handed. Place the metal fixing strip over the piping and the web of the fairing. Using the strip as a template, drill holes as necessary and then rivet the strip into position with the bifurcated rivets supplied.

(vii) Refit the fairing making sure that the front and upper tongues have fully engaged in the slots of the plates and then re-clamp the fairing into final position. Check that the tongues project at least $\frac{1}{4}$" through the plates. Should difficulty be experienced in engaging the upper tongue with the slot in the plate, trim up the end of the tongue as necessary.

(viii) The next operation is to fit and weld the boss 'F', Fig.4 (also shown in view 'C', Fig.2) in the appropriate position on the rear wing. It will be observed from Fig.4 that the outer face of the boss is nearer to the wing at point 'D', than at point 'E', in order to ensure that the rear end of the fairing fits snugly to the wing. To fit, proceed as follows:-

a) With the fairing still clamped into its final position on the wing, scribe the position of the hole in the rear of the fairing on to the wing and remove the fairing.

b) Find the centre of the scribed circle on the wing, and from this centre, scribe another circle 1-5/16" dia. Drill a series of $\frac{1}{8}$" dia. holes <u>within</u> this circle and also through the inner metal skin of the wing and remove the metal.

c) Trim the hole in the wing until the boss is a good push fit in this hole. Trim the hole in the skin (it is not necessary for the boss to be a good fit in this hole) to allow the boss to be tilted so that when the outer face of the boss is flush with the wing at point 'D' Fig.4, the face of the boss at point 'E' will project from the wing by approximately 3/16". To assist in positioning the boss, point 'D' should be approximately 45° from the vertical line.

d) Remove the boss and clean away paint as necessary on the wing for welding purposes. Push the boss into position until the face of it at point 'D', stands proud of the wing by about 1/32" and at point 'E' by about 3/16". Weld the boss to the wing. Alternatively, the boss may be brazed to the wing.

(ix) Place the plated escutcheon on to the bolt and secure with the circlip. Place the rubber washer on to the escutcheon, fit these parts to the fairing and secure by fitting the circlip to the escutcheon. Again re-check the fit of the fairing on the wing. Remove the fairing. Mask the plated end of the bolt and the escutcheon and spray the fairing to match the finish of the coachwork. Clean up and re-cellulose wing as necessary.

FOR INFORMATION:

FITTING OF THE AUTOMATIC VACUUM OPERATED WINDSCREEN WASHER UNIT.

Retailers are advised that an automatic vacuum operated windscreen washer unit is now available for fitting to existing models of Bentley Mark VI Standard Saloons as a chargeable improvement.

This fitting is recommended as an aid to improved driving comfort and safety, being particularly suitable for use on cars normally used for long distances where accumulations of mud, grime or dirt on the windscreen glass necessitate frequent stoppages for the purpose of obtaining clearer vision.

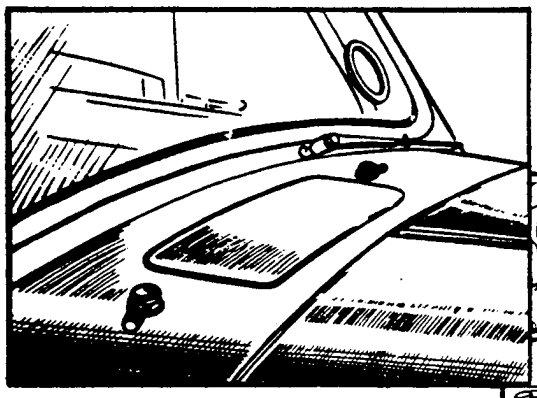

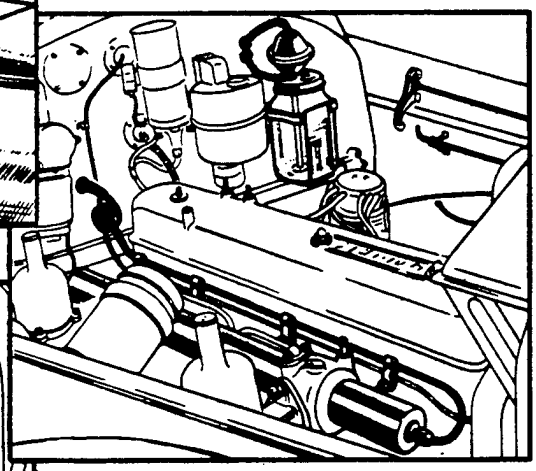

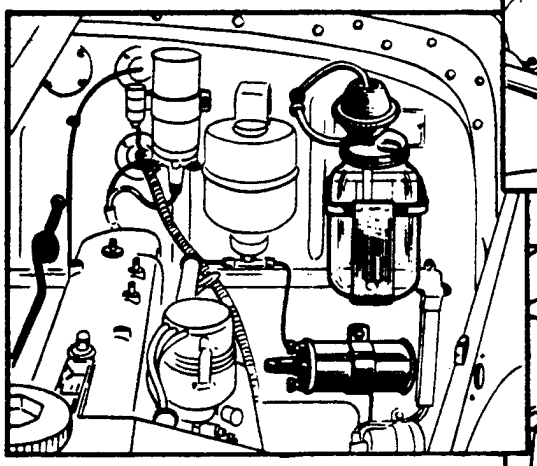

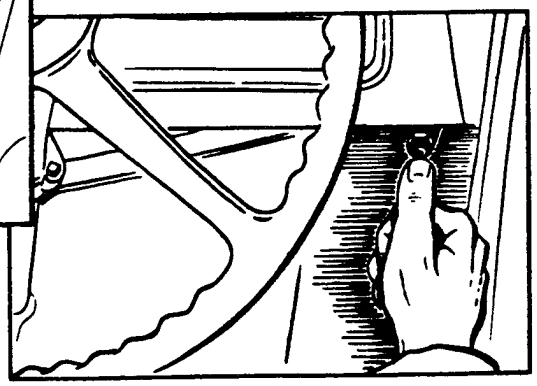

A storage jar with a water capacity for approximately 600 miles of driving is included, and the self-cancelling spray units are controlled through a single press-button which is conveniently positioned on the facia panel within easy reach of the driver.

The general arrangement of the system when installed in a car is shown in the above illustrations. It should be noted however, that the use of the glass storage jar shown is only applicable where no Oil Bath Air Cleaner is fitted.

Should it be decided to fit a windscreen washer unit to a car with an Oil Bath Air Cleaner, it will be necessary for the special type of storage tank shown in Fig. 2 overleaf to be used.

FITTING PROCEDURE.

OPERATIONS:

1. Drill the dashboard as shown in Fig. 3.

   a) The three holes "A" to be drilled for storage jar when no Oil Bath Air Cleaner is fitted.

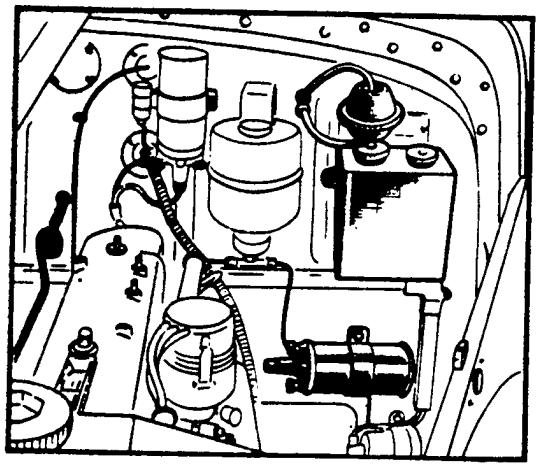

FIG. 2.

   b) The two holes "B" to be drilled for the special type storage tank when Oil Bath Air Cleaner is fitted. (Remove the Oil Bath element and top cover assembly to facilitate drilling and subsequent fitting of tank to dashboard).

   NOTES:- (i) Whether an Oil Bath Air Cleaner is fitted or not, the three holes "D" must be drilled.

   (ii) On cars which have the spare ignition coil mounted vertically below the metal cable conduit, it will be necessary for the coil to be relocated as shown.

2. Fit the storage jar to the dashboard:-

   a) Use the three 2-BA screws and nuts when fitting the standard glass jar.

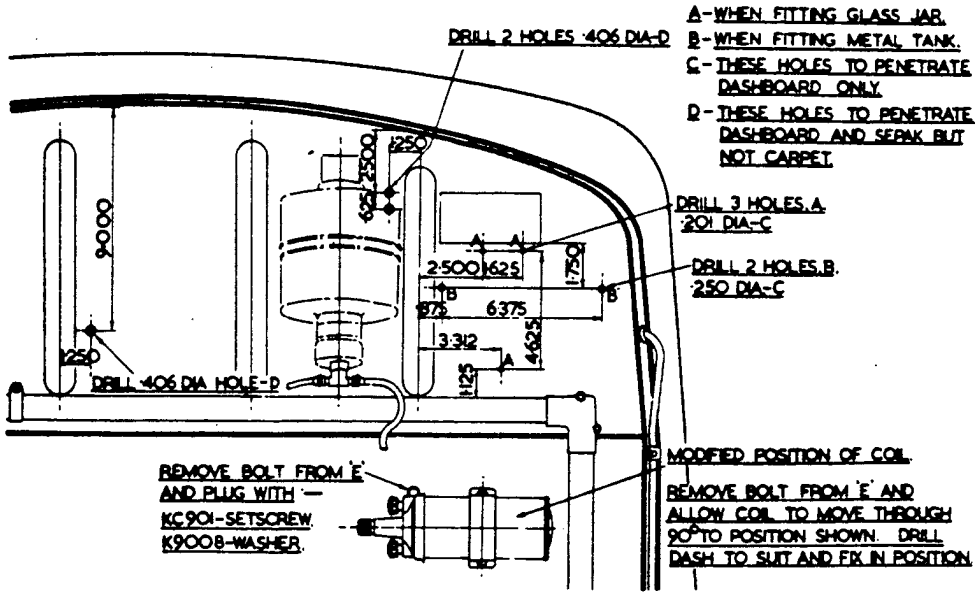

FIG. 3.

   b) When fitting the special type storage tank, use the two special studs provided. The shoulders of these studs should be on the engine side of the dashboard.

3. Fit the brass suction pipe to the induction manifold, (see Fig.1):-

   a) Remove the air silencer and then the existing core plug at the forward end of the manifold.

   b) Fit the special adaptor R-4109, (Aluminium Washer KB-1081), and connect up the suction pipe. Remove the nuts from the studs carrying the existing thermometer capillary tube retaining clips, and fit the four suction pipe clips.

   c) Refit the air silencer (and Oil Bath if fitted).

4. Drill the scuttle as shown in Fig.4:-

   NOTE: Prior to drilling, remove the following:-

   (i) Radio Set: Disconnect the aerial and power feed, (and bonding tape if fitted), and remove the fixing screws.

   (ii) Radio Mounting Tray: Remove the six retaining screws, three countersunk headed on the left-hand side, and three cheesehead on the right-hand side.

   (iii) Withdraw the tool tray.

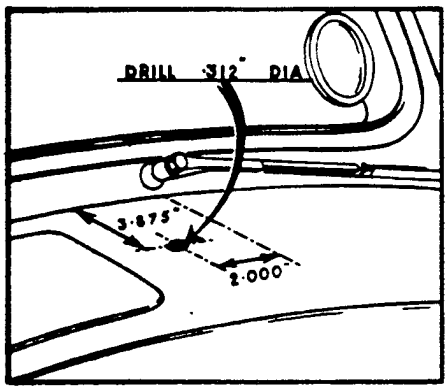

FIG. 4.

To ensure concentricity of the holes in the underskin of the scuttle with those drilled in the top panel, it is recommended that the operator continues drilling after penetrating the top panel.

a) Open out the two holes in the underskin to 0.7187" (18.26 m/m) and fit the two rubber grommets D-74723 provided.

5. Fit the Control Valve below the right-hand glove box as shown in Fig.5:-

   a) Remove the existing angle bracket screws from the back of the facia board.

   b) Assemble the control valve and mounting bracket and slide the top of the bracket up between the back of the facia board and the angle bracket.

   c) Adjust the position of the Control Valve mounting bracket to give a clearance of 3/16"(4.75 m/m) between the bottom edge of the facia board and the hexagonal lock nut as shown. Using the existing angle bracket as a template, mark off positions for the two retaining screws on the Control Valve mounting bracket. Remove this and drill accordingly.

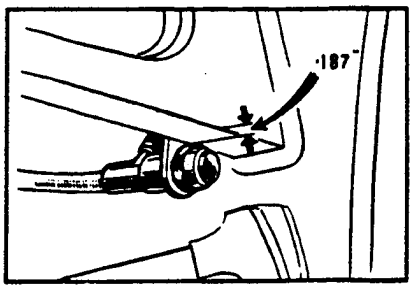

FIG. 5.

d) Refit the Control Valve and its mounting bracket between the angle bracket and the back of the facia board. Secure both the brackets together by means of the longer wood screws provided, using one of the original angle bracket screws for the purpose of fixing the top of the mounting bracket.

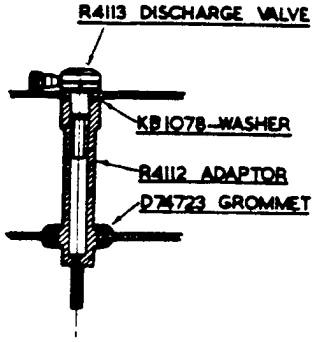

FIG. 6.

6. Fit the two spray units as shown in Fig.6:-

NOTE: To obviate the possibility of a leakage developing, it is recommended that the threads are treated with a suitable sealing compound.

7. Install the various lengths of rubber hosing as shown in Fig. 7:-

NOTE:- To avoid kinks, it is recommended that the holes which have been drilled through the sepak are suitably radiused off on the driver's side.

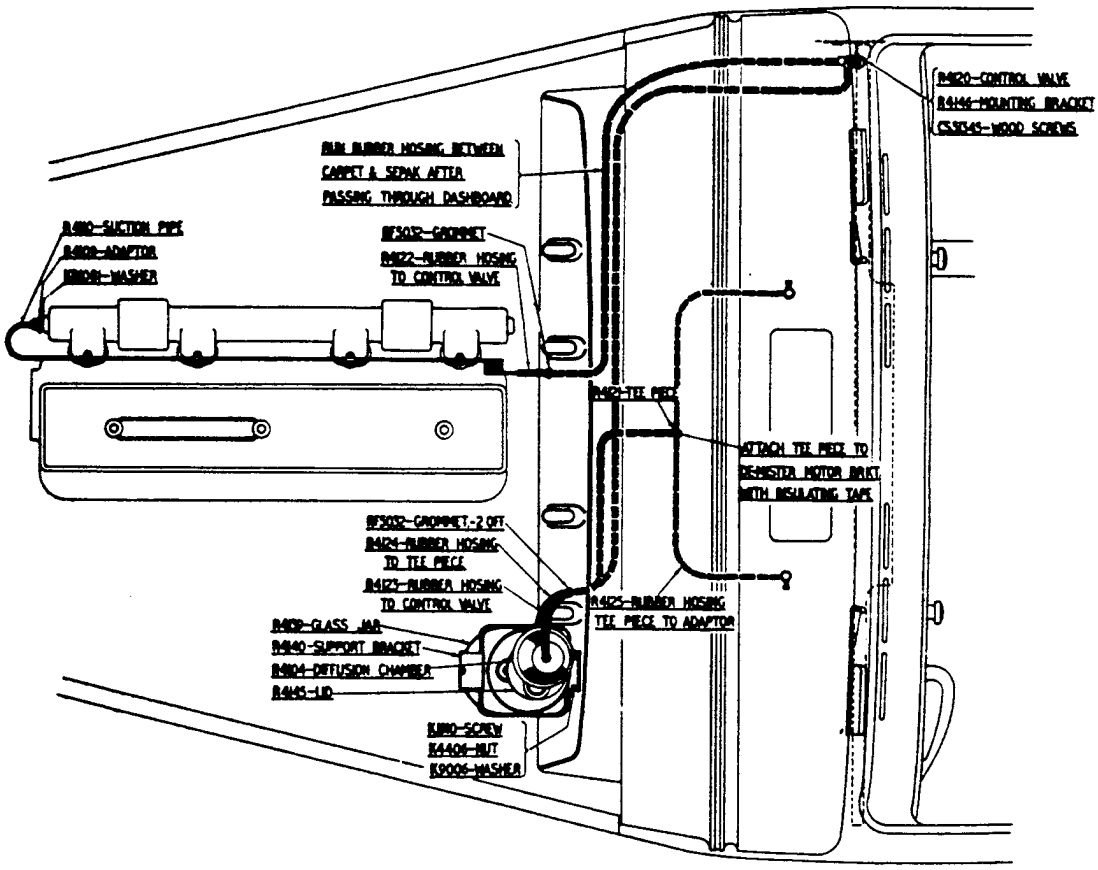

FIG. 7.

8. Fill the storage jar/tank with clean water, start up the engine, and test for correct functioning of the spray units.

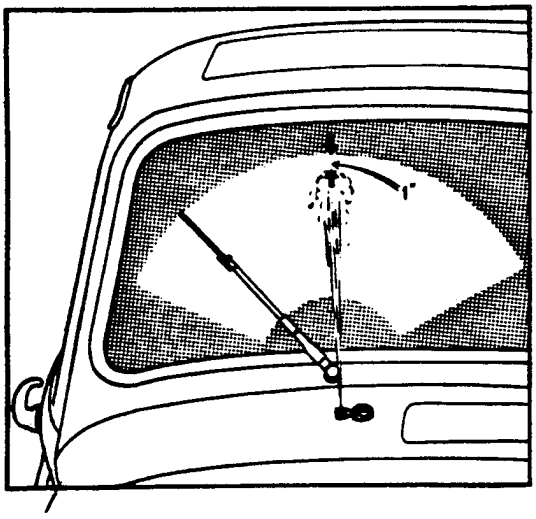

FIG. 8.

A certain amount of adjustment will be required to ensure that the two jets of water impinge on the windscreen both centrally and at approximately 1" below the highest point of each respective wiper arc as shown in Fig. 8.

The first essential will be obtained by initially fitting the spray units to the scuttle with their nozzle arms set forward approximately $12\frac{1}{2}^{\circ}$ relative to the lower windscreen beading.

To obtain the correct degree of jet elevation, the complete nozzle arm will require to be either further tightened up or slackened back in the spray unit.

Of these, the former method is preferable, but should it be found necessary for the arm to be slackened back further, it is recommended that the threads are treated with a suitable sealing compound as a preventive against leakage.

PARTS REQUIRED.

When fitting a Windscreen Washer to a car not incorporating an Oil Bath Air Cleaner, the following parts will be required:-

R.4144	Standard Kit(Trico) Windscreen Washer.	1 Off
K.1910	Screws, Retaining 2-BA x 3/4" - Storage Jar.	3 Off
K.4307	Nut, for Retaining Screws 2-BA.	3 Off
K.9006	Washer, Spring for Retaining Screws.	3 Off
R.4109	Adaptor, Induction Manifold.	1 Off
KB.1081	Washer, Aluminium for Induction Manifold Adaptor.	1 Off
RF.5032	Grommet, Rubber for Rubber Hosing through dash.	3 Off
R.4112	Adaptor, Spray Units.	2 Off
D.74723	Grommet, Rubber for Spray Unit Adaptor.	2 Off
R.4110A	Brass Suction Pipe c/w Clips.	1 Off
KB.1078	Washer, Aluminium for Spray Unit Adaptor.	2 Off
R.4137	Bracket, Mounting for Control Valve.	1 Off
CS.31345	Screws, Wood for Control Valve Mounting Bracket.	2 Off
KC.901	Stud, Set for blanking dash.	1 Off
K.9008	Washer, for Set Stud.	1 Off

When it is decided to fit a Windscreen Washer to a car with an Oil Bath Cleaner, the following parts will be required, in addition to those detailed above:-

R.4101	Storage Tank - Modified Type.	1 Off
R.4103	Cap, Screwed for Diffuser Chamber - Storage Tank.	1 Off
R.4106	Cap, Filler - Storage Tank.	1 Off
R.4107	Stud, Shouldered, Tank Retaining.	2 Off
K.4008/Z	Nut, for Shouldered Retaining Stud.	4 Off

NOTE:- When using the above, the following items normally included in the Standard Kit, R-4144, will not be supplied:-
Glass Storage Jar.
Screwed Cap for Glass Storage Jar.
Mounting Bracket, Glass Storage Jar.

FOR INFORMATION:

ALTERATION TO EXISTING PARTS & PART NUMBERS.

(SUPERSEDES PREVIOUS ISSUE DATED 4.11.49).

Subsequent to the publication of Service Bulletin BB-66, certain modifications to the existing brass suction pipe and induction manifold adaptor have been effected.

Due to the additional experience gained since the introduction of the Vacuum Operated Windscreen Washer on existing Bentley Saloons, the three 1.00" coils at the dash end of the original suction pipe assembly have been deleted, and at the same time the internal diameter of the pipe itself has been increased. The new pipe assembly has been allocated a fresh part number (R-4103), and replaces the original pipe assembly (R-4110A).

In view of this increase in pipe diameter, it has also been necessary to provide a new adaptor for the forward end of the induction manifold, the part number of the new adaptor being R-4248, replacing R-4109 as previously stated.

It has now been decided to include these two new items in the Standard Kit (Trico) Windscreen Washer, thus making it unnecessary for individual ordering as previously stated on Page 6 of the original leaflet.

It is however, pointed out that the four suction pipe retaining clips are now separate items, and must be ordered individually, quoting the following new part number:-

R-4276. Clip for Suction Pipe & Thermo Cable. 4 Off.

A further alteration in part numbers is also brought to the notice of all Retailers, this being as follows:-

Bracket, Mounting for Control Valve. (R-4146 in place of R-4137)

Will Retailers please amend their existing issues of Service Bulletin BB-66 to conform with the above information.

The fitting instructions laid down in the original issue of this leaflet are not affected in any way by the alterations mentioned above.

FOR INFORMATION:

ADDENDUM TO FITTING INSTRUCTIONS GIVEN IN SERVICE BULLETIN BB-66.

Subsequent to the publication of Service Bulletin BB-66, it is felt that a certain degree of uncertainty exists regarding the correct manner of fitting the two runs of rubber hosing between the diffusion chamber and the control button and tee-piece on the spray unit line.

With this in mind, it has been decided to clarify the diagrammatic instructions given in Fig. 7, page 4, of the original issue.

Retailers are advised, when fitting an Automatic Vacuum Operated Windscreen Washer Unit, to ensure that the run of hosing from the top adaptor of the diffusion chamber is connected to the control valve on the facia, and that the tee-piece on the spray unit line is connected to the lower adaptor of the chamber.

Failure to observe this will only result in the functions of these two units being reversed, i.e. air being expelled through the spray nozzles and water being injected into the induction manifold.

FOR INFORMATION:

THE TRICO VACUUM OPERATED WINDSCREEN WASHER.

(APPLICABLE TO RIGHT-HAND & LEFT-HAND BENTLEY MK.VI)

(Supersedes Previous Service Bulletin BB-66c, 16.10.50).

Retailers are advised that the Trico vacuum operated windscreen washer system incorporated on current right and left-hand drive chassis in production is now available for fitting to earlier models in service as a chargeable improvement should owners desire it.

This fitting is recommended as an aid to improved driving comfort and safety, being particularly suitable for use on cars normally driven over long journeys where accumulations of mud, grime or dirt on the windscreen glass necessitates frequent stoppages for the purpose of cleaning the screen.

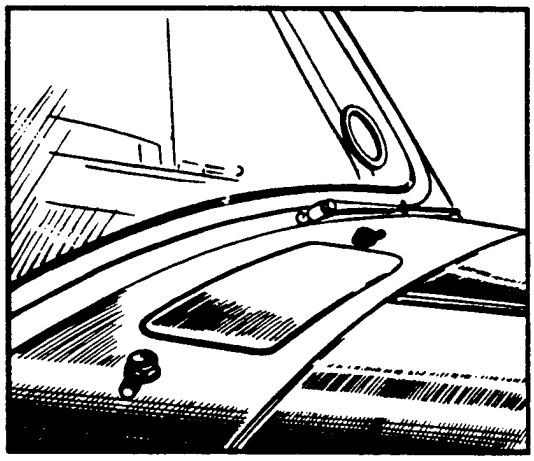

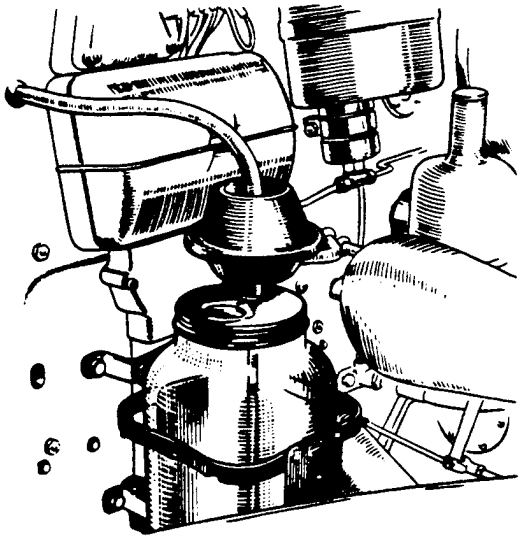

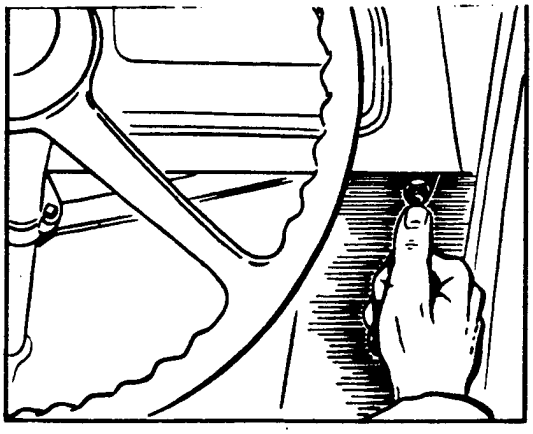

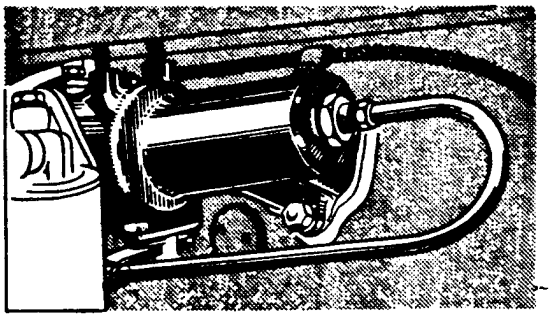

The equipment consists of two self-cancelling jets, mounted on the scuttle just forward of the windscreen wiper blades, and controlled through a single press button conveniently situated within easy reach of the driver on the right-hand side of the facia board on right-hand drive cars (left-hand side on left-hand drive vehicles.) On pressing this button, the induction depression from the manifold is communicated to the diaphragm of the pump on top of the reservoir, which is a glass container fitted to the dash under the bonnet.

When the button is released, the diaphragm is returned under spring pressure, and causes two jets of fluid to be directed on to the windscreen at a pre-determined point within each wiper arc. The screen wipers should then be set into operation, when the screen will immediately be cleaned.

The general arrangement of the system when installed in a right-hand drive car is shown in the illustrations above, and a list of material required will be found appended at the end of this leaflet.

FITTING PROCEDURE.

1. Drill the dashboard for the storage jar mounting and rubber tubing grommets in accordance with either Fig. 2 or Fig. 3.

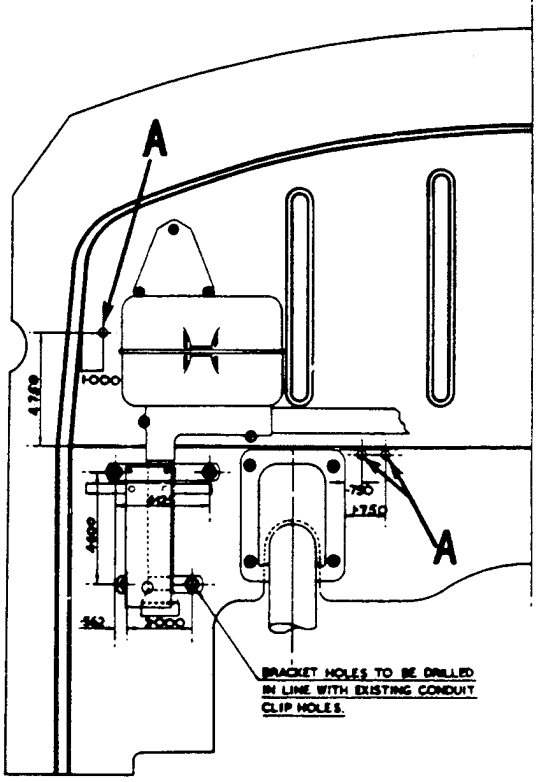

FIG.2. DRILLING FOR EARLY TYPE DASH. (One-shot tank on L/H side)

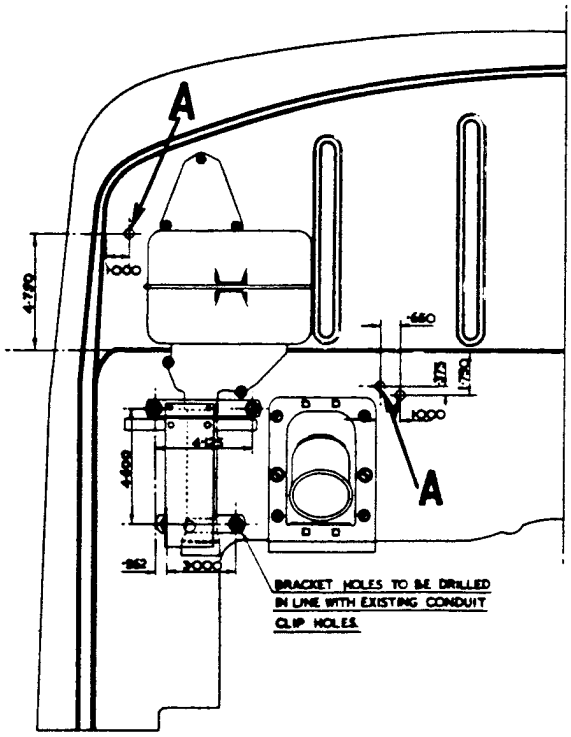

FIG.3. DRILLING FOR LATE TYPE DASH. (One-shot tank on R/H side)

NOTES: (a) Fig.2 covers the drilling for ALL chassis prior to B-251-EW also certain chassis between B-251-EW and B-271-EW incl.

(b) Fig.3 covers the remaining chassis up to B-273-EW and ALL chassis from B-273-EW inclusive.

(c) The three grommet holes marked 'A' to be 0.375" dia.

(d) The four bracket holes to be 0.250" dia.

2. Fit the mounting brackets to the storage jar cradle, using the three 2-BA bolts, nuts and spring washers supplied.

   NOTE: Due to alteration in the dash layout on the later model chassis, two types of mounting brackets are employed as shown in Fig.4, the upper pair being for use on those chassis fitted with the early type dash (Fig.2), and the lower pair on the later type dash (Fig.3). Where the late type brackets (RD-5912/3) are used, the right-angled bracket arm should be fitted AWAY from the engine.

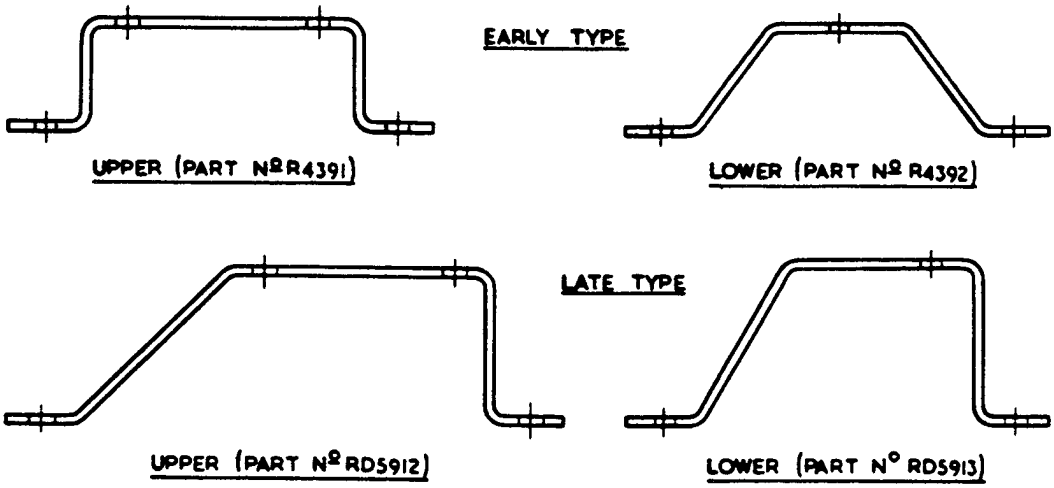

FIG. 4. MOUNTING BRACKETS.

3. Bolt the cradle assembly on to the dash and fit the storage jar as shown in Fig.1. (N.B. Sufficient clearance should be allowed between the pump diaphragm at the top of the jar and the fuse box cover to permit the subsequent removal of the cover without having to remove the jar).

4. Fit the suction pipe adaptor to the induction manifold:-

   a) Left-hand drive cars:- Drill and tap the induction manifold and fit the special adaptor (R-4356) as shown in Fig.5.

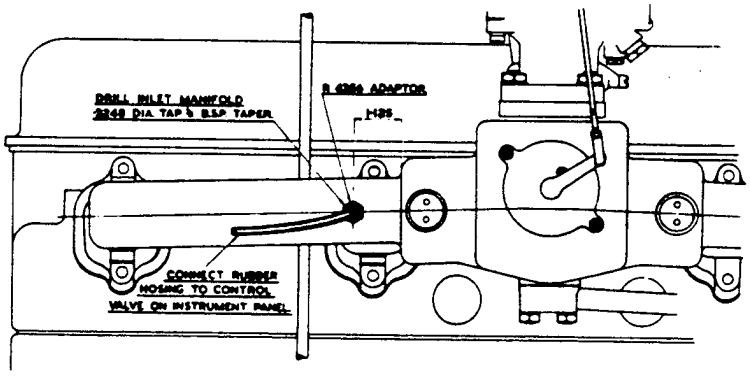

FIG.5. DRILLING OF MANIFOLD (LEFT-HAND DRIVE CARS).

b) Right-hand drive cars:-

(i) Remove the air silencer (and oil bath if fitted,) and then the existing core plug at the forward end of the induction manifold.

(ii) Fit the special adaptor, RE-10883, (Aluminium Washer KB-1081), and connect up the suction pipe (this should run BELOW the induction manifold). Fit the two suction pipe clips (RE-10852) to the outer studs of the front and rear "hot spot" flange connections as shown in Fig.10.

(iii) Refit the air silencer (and oil bath if fitted).

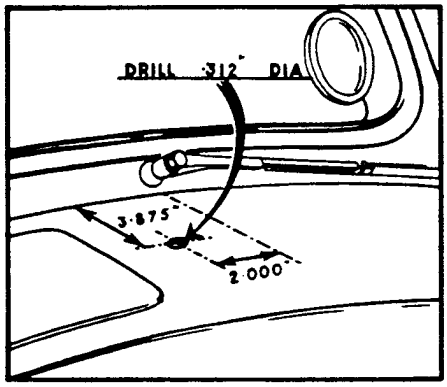

FIG. 6.

5. Drill the scuttle as shown in Fig.6:-

NOTE: Prior to drilling, remove the following items:-

a) RADIO SET: Disconnect the aerial and power feed, (and bonding tape, if used) and remove the fixing screws.

b) RADIO MOUNTING TRAY: Remove the six retaining setscrews, three countersunk headed on the left-hand side, and three cheesehead on the right-hand side.

c) Withdraw the tool tray.

To ensure concentricity between the holes in the underskin of the scuttle and those in the top panel, it is recommended that the operator drills both panels in one operation.)

d) Open out the two 0.312" dia. holes in the underskin to 0.7187" dia. and fit the two rubber grommets (D-74723) supplied.

6. Fit the two spray units as shown in Fig.7:-

NOTE: To obviate the possibility of a leakage, it is recommended that the threads at the spray unit end of the adaptors are treated with sealing compound.

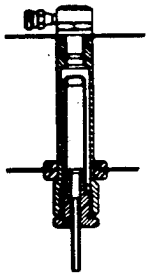

FIG. 7.

A fine mesh filter is embodied in each adaptor body as shown, thus ensuring that no foreign matter which may be present in the pipe line can reach the spray jets at the end of the nozzle arms. These filters are easily removable for cleaning purposes, being integral with the brass hexagonal union nuts which screw into the bottom of the adaptors, (Fig.8 illustrates a filter assembly removed from its adaptor,) but care should be taken to prevent any slackening of the adaptor by holding a second spanner on the hexagonal portion of the adaptor body.

FIG.8.

7. Fit the press button control on the bottom right-hand corner of the facia board as shown in Fig.9. (N.B. On left-hand drive cars, the press button control is fitted on the bottom left-hand corner, using the special mounting bracket, R-4320).

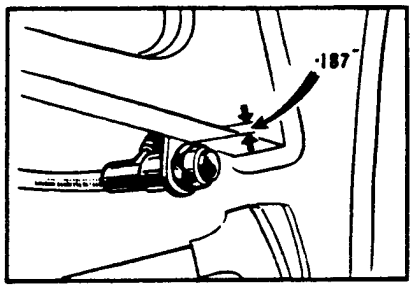

FIG. 9.

a) Remove the existing angle bracket screws from behind the facia board.

b) Assemble the control button and mounting bracket together, and slide the top of the bracket between the back of the facia and angle bracket.

c) Adjust the height of the mounting bracket to give approximately 3/16" clearance between the bottom edge of the facia and the hexagonal lock nut as shown, then, using the angle bracket as a template, mark off the relative positions for the two fixing holes in the blank flange of the mounting bracket. Withdraw the assembly and drill accordingly.

d) Refit the assembly and secure both the brackets together with the two longer wood screws supplied. (N.B. Normally the two longer screws will be sufficient to ensure that there is no movement in the mounting, but should greater rigidity in the bracket fixing be required, then use one of the original angle bracket screws for the top of the mounting bracket).

8. Install the various lengths of rubber tubing (Fig.10 refers to right-hand drive cars,and Fig.11 to left-hand drive cars:-)

NOTES: (a) The rubber tubing is supplied in two bulk lengths of 12'0" and 2'0", and will require cutting to suit the individual car.

(b) To avoid kinks forming in the tubing after it has passed through the dash and sepak, it is recommended that the holes drilled through the sepak are suitably radiused off on the DRIVER'S side.

9. Connect up the spray units and control button with the storage jar and suction pipe as shown.

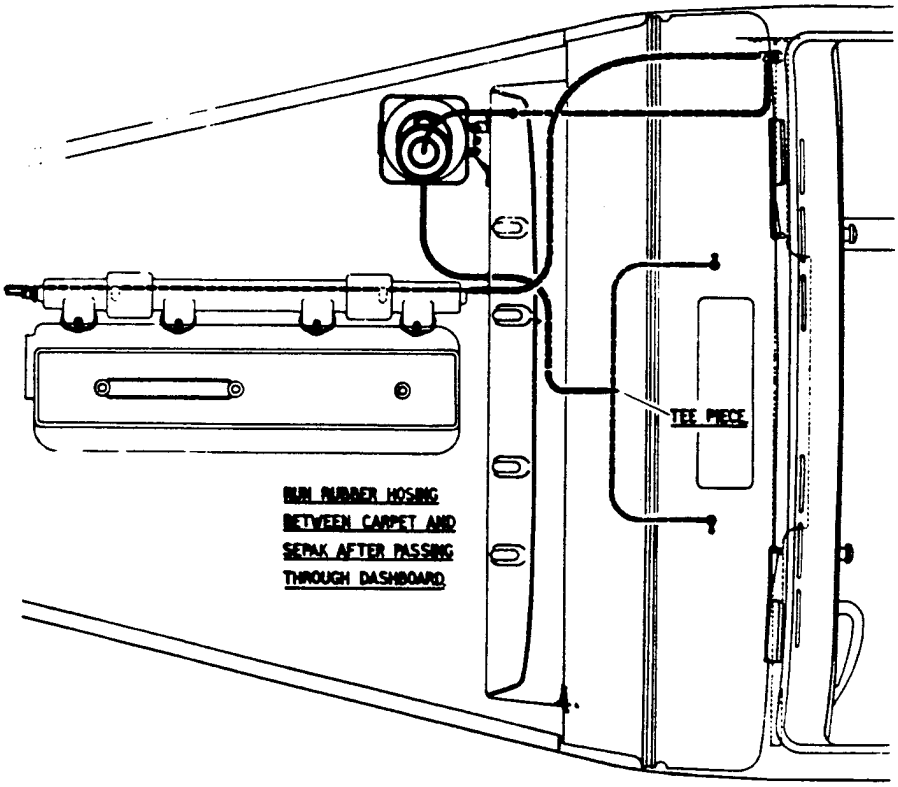

FIG. 10.

NOTE: The run of 3/16" I/D tubing from the top adaptor of the pump diaphragm goes to the control button, while that from the lower adaptor is connected to the tee-piece of the spray unit pipe line below the scuttle.

10. Fill up the storage jar with clean water, start up the engine, and test for correct functioning of the system.

A certain amount of adjustment will be necessary to ensure that the two jets of water impinge on to the windscreen both centrally and at approximately 1.00" BELOW the highest point of each wiper arc, Fig.12.

The first essential will be obtained by initially fitting the spray units with their nozzle arms set FORWARD approximately $12\frac{1}{2}^{o}$ relative to the lower beading of the windscreen.

The second requirement, i.e. correct jet elevation, will necessitate the nozzle arm being either further tightened up or slackened back in the spray unit body. Of these, the former method is preferable, but should it be found necessary to slacken the arm back, it is recommended that the threads of the nozzle arm are treated with a suitable sealing compound to obviate the possibility of a leakage developing during service.

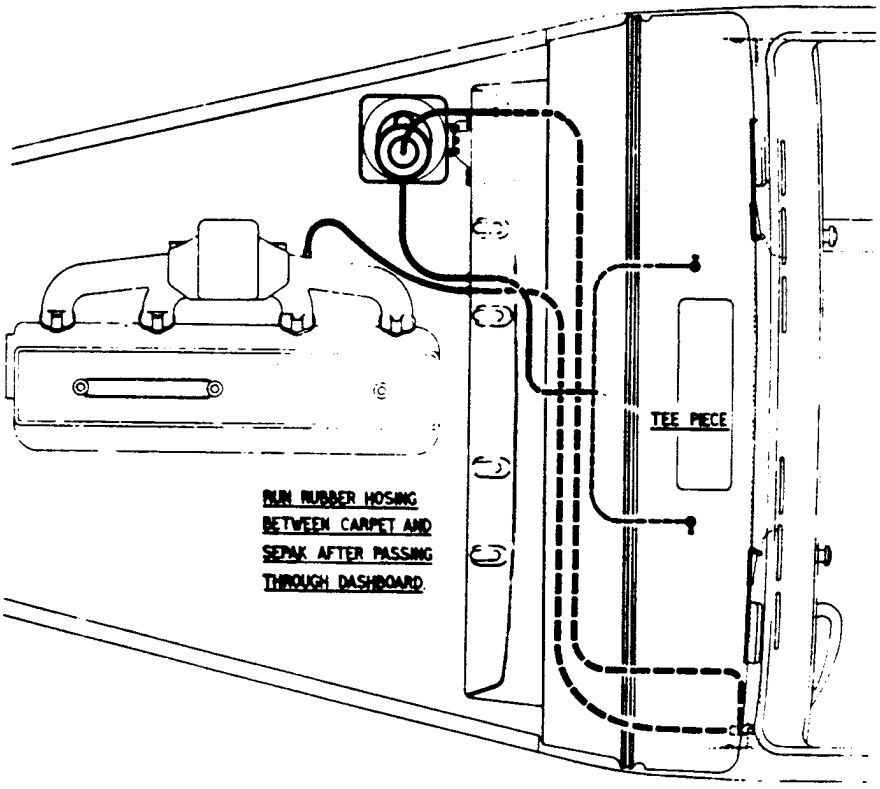
TEE PIECE
RUN RUBBER HOSING BETWEEN CARPET AND SEPAK AFTER PASSING THROUGH DASHBOARD.

FIG. 11.

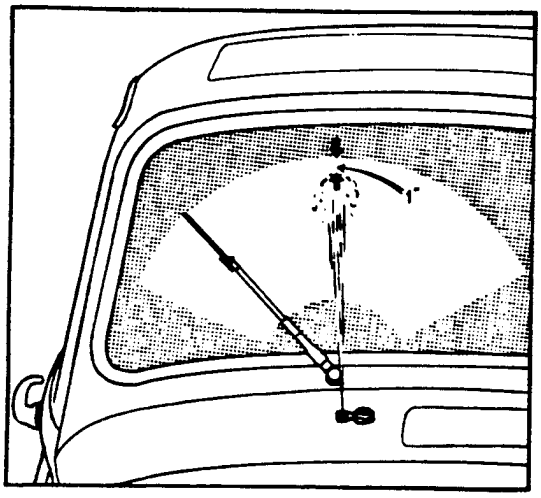

FIG. 12.

LIST OF PARTS REQUIRED.

RD-5947	TRICO FOLBERTH STANDARD KIT.	1 off
	Comprising the following:-	
R-4139	Glass Container	1 "
R-4140	Support Bracket - Glass Container	1 "
R-4104	Diffusion Chamber	1 "
R-4145	Lid - Glass Container	1 "
R-4167	Suction Pipe & Filter - Glass Container	1 "
R-4120	Control Button Valve	1 "
R.4121	Tee-Piece - Spray Unit Pipe Line.	1 "
R-4113	Spray Unit Assembly	2 "
R-4520	Rubber Wa her - Spray Unit to Scuttle	2 "
The following to be ordered separately as NOT in standard Kit:-		
xR-4356	Adaptor - Induction Manifold	1 "
+R-10883	Adaptor - Induction Manifold	1 "
+KB-1081	Aluminium Washer - Induction Manifold Adaptor	1 "
+K-3001	Compression Sleeve - for above	1 "
+KB-3021	Nut - Suction Pipe to Manifold Adaptor	1 "
+RE-10851	Suction Pipe - Induction Manifold to Dash	1 "
+RE-10852	Clip - Suction Pipe to Induction Manifold	2 "
RF-5032	Grommet - Rubber Tubing through Dash	3 "
RD-6287	Adaptor - Spray Unit Mounting	2 "
RD-6286	Filter Assembly - for above	2 "
RD-6290	Rubber Washer - Filter Union to Adaptor	2 "
KB-1078	Washer - Adaptor to Spray Unit	2 "
D-74723	Grommet - Spray Unit Adaptor through Underskin	2 "

R-4391	Mounting Bracket-Upper-Storage Jar Cradle to Dash.	1 Off
R-4392	do. -Lower- do.	1 "
⊥RD-5912	do. -Upper- do.	1 "
⊥RD-5913	do. -Lower- do.	1 "
K-203/Z	Bolt, Retaining-Mounting Bracket to Dash.	4 "
K-4310/z	Nut - for above.	4 "
K-9008/Z	Spring Washer - for above.	4 "
K-1910/Z	Screw, Retaining-Cradle to Mounting Bracket.	3 "
K-4307/Z	Nut - for above.	3 "
K-9006/Z	Spring Washer - for above.	3 "
+R-4146	Mounting Bracket-Control Valve to Facia.	1 "
xR-4320	do. do.	1 "
CS-31345	No.4 Wood Screw x 5/8" long - for above.	2 "
RD-5510/11/16.	Rubber Tubing - Main Pipe Line-0.156"x0.343" o/d	12 Ft.
RD-5512/3.	Rubber Tubing-Spray Unit Pipe Line-0.109"x0.235"	2 "

NOTES: (a) Items marked with x refer to left-hand drive cars ONLY.

(b) Items marked with + refer to right-hand cars ONLY.

(c) Items marked with ⊥ refer to chassis fitted with the late type dash, i.e. ALL chassis between B-273-EW and B-500-FV incl.

FOR INFORMATION:

PETROL FILLER DOOR LOCKS.

Retailers are advised that petrol filler door locks are now available for fitting to Bentley Standard Saloons already in service at an extra charge.

Fig. 1 illustrates the finished appearance of a petrol filler door with a lock fitted.

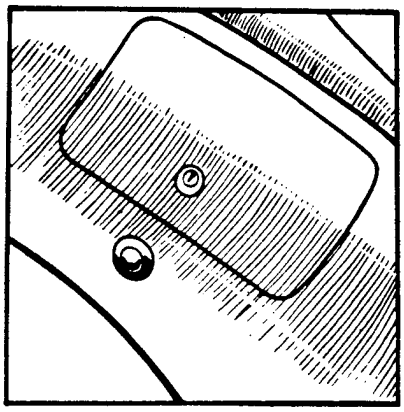

FIG. 1.

FITTING INSTRUCTIONS.

1. Remove the filler door from the wing.
2. Remove the existing filler door striker plate.
3. Mark off the datum line "AA" as shown in Fig. 2.
4. Mark off and then cut away the inner panel of the door as shown in Fig. 2.
5. Drill the outer panel of the door as shown in Fig. 2.

NOTE: Particular care should be taken when drilling this hole, as any appreciable error will result in difficulty being experienced with the operation of the door lock when it is finally assembled.

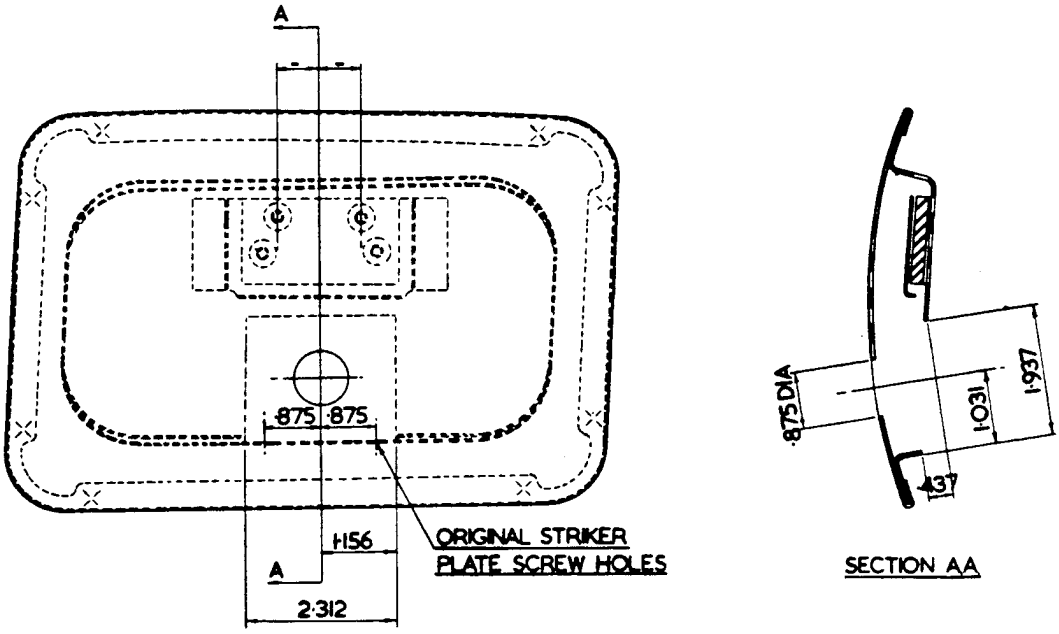

FIG. 2.

6. Weld the rear lock striker plate to the back of the lock mounting plate, ensuring that this is set 1/16" (1.6 m/m) inwards from the bottom edge of the mounting plate as shown in dimension "A" Fig. 3.

7. Rivet the lock assembly to the front of the mounting plate, using the four rivets provided.

   NOTE: Prior to riveting, it is recommended that the slot cut in the mounting plate is checked for clearance in conjunction with the tongue of the lock.

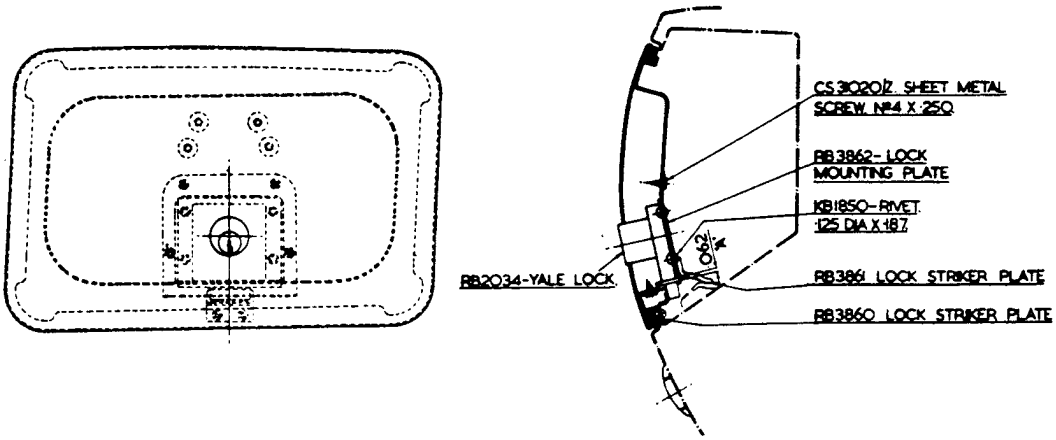

FIG. 3.

8. Temporarily locate the lock in position in the filler door and mark off the centres for the six retaining screws, using the mounting plate as a template.

9. Remove the lock assembly and drill the inner door panel accordingly. Refit the lock assembly and secure to the door panel by means of the retaining screws as shown in Fig. 3.

10. Drill and secure the front striker plate to the interior flange of the filler compartment as shown in Fig. 3, using two 3-BA countersunk headed screws and nuts. Replace the rubber grommet after tightening the nuts.

11. Refit the filler door to the wing.

A certain amount of adjustment may be necessary before satisfactory operation between the door lock rear striker plate and the existing push button catch is obtained. As this entails bending the striker plate, either upwards or downwards, care should be taken to ensure that, when closing the door, this clears the front striker plate.

Cancels Page 3 of Bulletin BB-69
dated 13.4.49.

MATERIALS REQUIRED.

RB.2034	Lock Assembly, Yale	1 off.
RB.3862	Lock Mounting Plate	1 off.
RB.3861	Rear Striker Plate	1 off.
RB.3860	Front Striker Plate	1 off.
KB.1850	Rivet	4 off.
CS.31020/Z	Screws, Sheet Metal No.4.	6 off.

All the above are obtainable from the London Service Station.

CATEGORY 1 MODIFICATION:

REAR NUMBER PLATE ILLUMINATION.

In order that all Bentley Mark VI cars now operating in the U.S.A. shall conform with existing lighting regulations, a modified type of rear number plate support bracket has been introduced, which, when used in conjunction with the existing lamp, will provide direct illumination of the rear number plate.

This modified support bracket differs from the standard fitting by having a built-up boss, the outer face of which is set at an angle of 28° relative to the bracket itself. The lamp is fixed to this inclined face, thus ensuring that the number plate is directly lit.

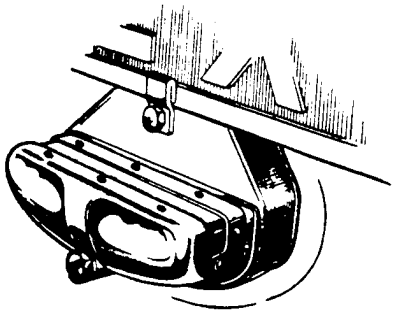

PRE-MODIFIED ASSEMBLY.

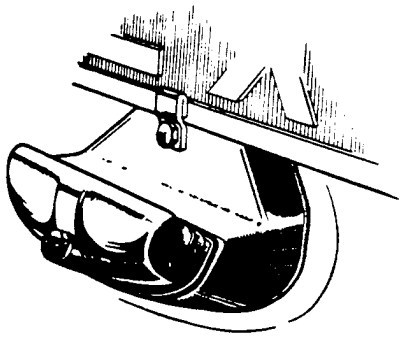

MODIFIED ASSEMBLY.

Arrangements have been made for the despatch of sufficient quantities of these modified brackets to cover all known requirements, and Retailers are requested to effect this modification as soon as cars are available. Further supplies of these modified brackets, if necessary may be obtained upon application to the London Service Station, Hythe Road, Willesden, London.N.W.10.

FITTING INSTRUCTIONS.

A. REMOVAL AND DISMANTLING OF EXISTING BRACKET AND LAMP ASSEMBLY:

1. Remove the spare wheel lid from the body, first ensuring that all light cables are disconnected at the junction box end.

2. Lay the spare wheel lid on the bench and remove the 27 small set screws which secure the inner cover plate to the inside panel of the lid. Remove the cover plate.

3. Remove the 3 x 1/4" B.S.F. nuts securing the rear number plate support bracket to the lid. The spare wheel lid and support bracket may now be separated, but care should be taken to see that neither the metal plate nor the rubber seal interposed between the bracket and outer surface of the lid are lost or damaged, as these will be required again.

4. Remove the acorn nut and clamping stud securing the rear number plate carrier to the support bracket, and also the small set stud and clamping piece located at the base of the number plate itself.

5. Extract the three 1/4" x 7/8" B.S.F. studs from the back face at the base of the support bracket. Remove the lamp assembly. (The support bracket casting may now be discarded).

B. FITTING OF THE MODIFIED SUPPORT BRACKET AND LAMP:

1. Fit the three 1/4" x 7/8" B.S.F. studs to the back face of the modified support bracket.

2. Fit the existing number plate and carrier, using the original acorn nut and clamping stud. Secure the base of the number plate by means of the small set stud and clamping piece.

3. Fix the lamp to the inclined face of the boss at the base of the support bracket.

4. Fit the complete assembly to the spare wheel lid, ensuring that the metal plate and rubber seal are correctly interposed.

5. Thread the light cables through the inner cover plate and secure the plate to the inside panel of the spare wheel lid by the 27 small set screws.

6. Refit the spare wheel lid to the body and connect up the light cables. (With the new lamp bracket, only one bulb is necessary).

It should be noted that all modified support brackets will require painting at the time of assembly to suit individual requirements.

MODIFICATION

FOR INFORMATION AND ACTION IF NECESSARY

TOP SCUTTLE VENTILATOR
(Standard Steel Saloon Body)

In the event of a complaint from a customer of insufficient ventilation through the top scuttle ventilator, a modification has been introduced as described below for improving the air flow, by removing the existing two grilles from the scuttle ventilator lid and fitting a nickle plated wire mesh screen. (Part No. RB.5266 - obtainable from the London Service Station.)

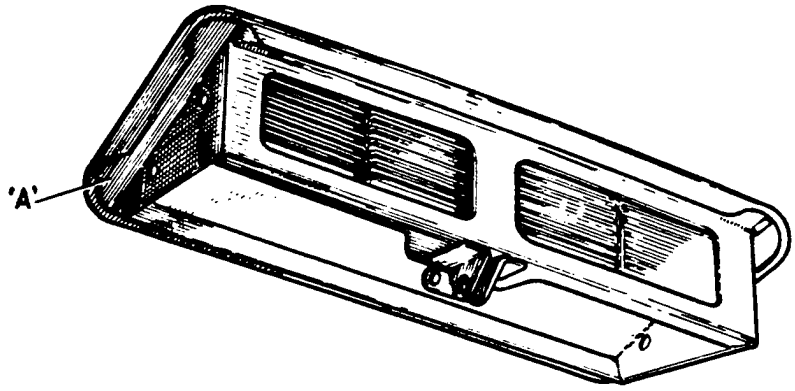

Fig. 1

To fit proceed as follows:-

(i) Remove the scuttle ventilator lid by unscrewing two screws on each end and removing the pin or bolt from the lower end of the link attached to the lid.

(ii) Remove the two grilles, (shown in Fig.1) starting from the outer ends by drilling into the spot welds on the inside. The inner ends can then be easily removed with a small chisel.

(iii) With a pair of shears or a hack-saw open out the two intake holes and file to the dimensions shown in Fig. 2. leaving the double thickness of metal down the central division.

(iv) Solder the wire mesh screen in position so that it covers the whole of the inside face of the intakes.
Note: If upon examination of the sealing surface of the underside of the lid it is found there is a depression at each of the four corners, ('A' Fig.1), caused by the clinched-over flange, then opportunity should be taken to fill them in as described below, in order to make the surface smooth and flat, thus making a better water seal.

The lids of a number of cars in service have already been attended to in this respect.

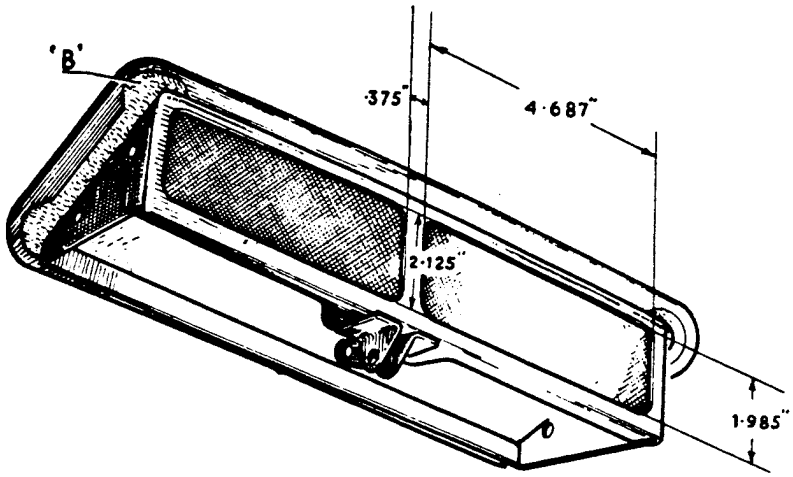

Fig. 2.

(a) Thoroughly clean the underside of the lid and fill in the depression at each corner with solder to surface level, ('B',Fig.2). Also fill in the channel running along the two sides, which lead into each corner. Face off the solder as necessary until it is flush all the way round.

(b) Mask the wire screen and re-cellulose the lid taking care to match the colour. Do NOT cellulose the wire screen.
Note: The above method of filling-in, which is preferable to the method described below, should however, only be undertaken where it is possible to match the existing colour, because, owing to the blistering effect of the solder it will be necessary to entirely re-cellulose the lid.

If the existing colour cannot be matched then proceed as follows:-

(a) Fill in the depression at each corner with plastic wood to surface level. Also fill in the channels running along the sides and front leading into the depressions. A similar channel at the rear of the lid need only be filled in to about one inch from either end. Allow the plastic wood to dry.

(b) Smooth the plastic wood surface with medium grade sandpaper and apply a layer of cellulose stopping to the plastic wood.

(c) Mask the wire screen and re-cellulose the lid as necessary.

Should it be found that the rubber seal is not in a good condition, then opportunity should also be taken to fit a new one. (Part No. RB.4825 - obtainable from the London Service Station.)

The fitting of a new rubber seal is fully described in Service Bulletin No. BB-34 (Section U).

If a new seal is fitted, it is important that the Bostik adhesive should be allowed to thoroughly dry before closing the lid, otherwise, the seal will take an incorrect set.

(vi) Replace the ventilator lid, making sure that the clearance between the lid and

the body aperature is consistent all round, and that the lid is flush with the scuttle top in the closed position.

Will all Retailers please notify this Service Station of the chassis numbers of cars on which this work is carried out.

FOR INFORMATION.

FRONT WINDOW RATTLE.

Cases have occurred in service where vibration has caused the front windows on early type Bentley Standard Saloons to rattle when these are in the half open position.

Normally, the "U" shaped rubber sealing strip fitted to the front of the window frame acts as a buffer between the projecting lip of the frame and the rear edge of the ventilator glass. Constant usage during service, however, tends to distort this seal, with the result that direct contact is established, thus rendering it liable for window rattle to develop.

As a means of obviating this a special rubber buffer strip (Part No. R-4343) has been introduced, and Retailers are recommended to incorporate this whenever dealing with complaints of this nature.

This will involve the cutting away of approximately 1.00" of the existing seal to accommodate the rubber buffer at the topmost corner of the window frame as shown in the sketch below.

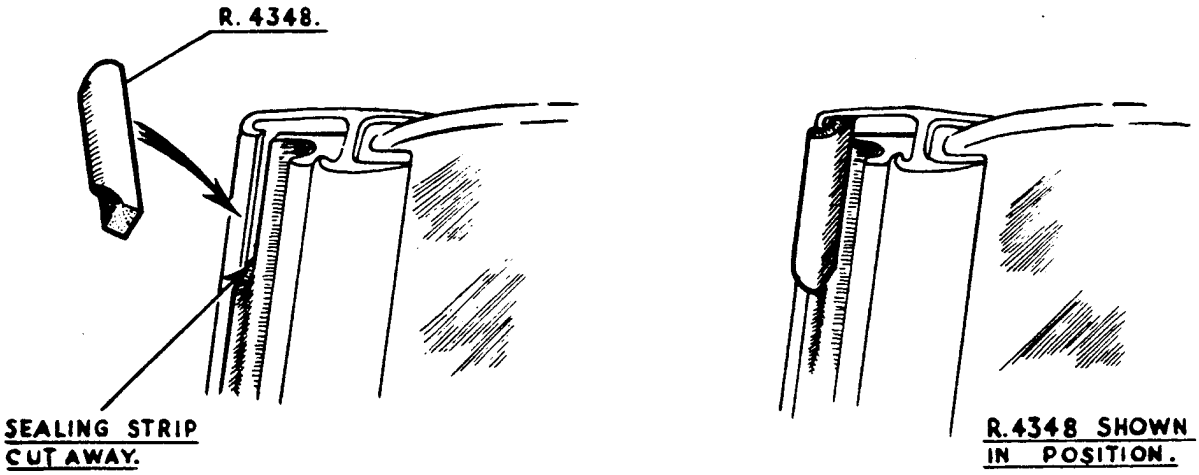

A suitable sealing compound for retaining this buffer strip in position is Bostik No. 252.

FOR INFORMATION

CARE AND MAINTENANCE OF LEATHER UPHOLSTERY

Retailers are advised, that in the majority of cases, deterioration in the general appearance of the leather upholstery, apart from normal wear and tear during service, is due to grime or dirt becoming ingrained in the surface of the leather.

In view of this, it is thought advisable to issue the following recommended procedure for the care and maintenance of the leather upholstery so that Retailers may effectively deal with complaints of this nature.

(1) Dissolve a sufficient quantity of good quality soap flakes to ensure a good lather, and then thoroughly wash the leather, using a soft cloth for the purpose. DO NOT scrub with a hard brush.

(2) Swab off with clean water and thoroughly dry the leather.

(3) Treat the leather with Connolly's Hide Food as follows:-

a) Apply evenly with a soft cloth, changing the surface of the cloth frequently.

b) Polish with a soft DRY cloth.

FOR INFORMATION.

LUBRICATION OF DOOR HINGES.

Certain cases have arisen where the car door hinges have become rough or stiff after a period of service, which has shown to have been due to inefficient lubrication.

It is realised that the effective lubrication of the top slide, where roughness occurs due to the tilting action of the hinges under the weight of the door, presents some difficulty, as the lubricant is likely to be scraped off by the sliding action of the moving parts.

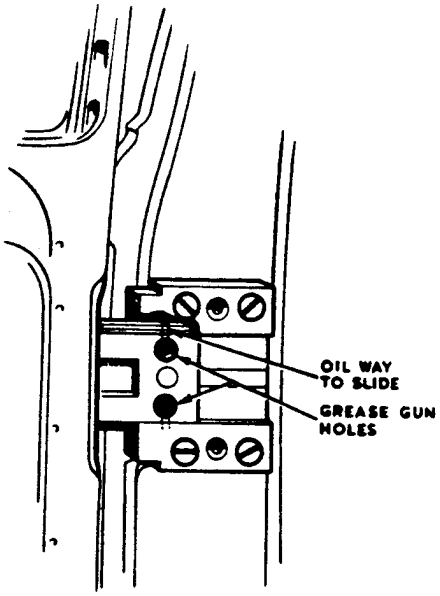

It has therefore been decided that on the original build up of the car at the Factory, that the door hinges are to be lubricated with a graphited grease, namely D.A.G. graphite grease "G.A", and Retailers are recommended that if a door is being overhauled in service, that they should also carry out similar action.

A modification is to be introduced by the drilling of two suitable holes in the slide piece for the insertion of the grease gun, (see illustration) and it will be recommended in the Owner's Handbook that this part is periodically serviced, every 10,000 miles by the Owner, using Mobilgrease No. 2 as the grease gun in the car tool kit is already charged with this grease.

FOR INFORMATION:

MODIFICATION TO QUICK-LIFT WINDOW REGULATOR.

A few instances have been reported where the quick-lift window regulator handle has worked loose during service on existing models of Bentley Mark VI Standard Saloon.

As a means of overcoming this, a tapered plug (Part No.R-4457) has been introduced for fitting into the end of the existing splined shaft of the window regulator, and Retailers are recommended to incorporate this whenever dealing with complaints of this nature.

This will involve the slotting and counterboring of the splined shaft to accommodate the tapered plug, and all the necessary instructions for fitting are given below.

Fig. 1 illustrates the general arrangement of the regulator assembly with the plug in position.

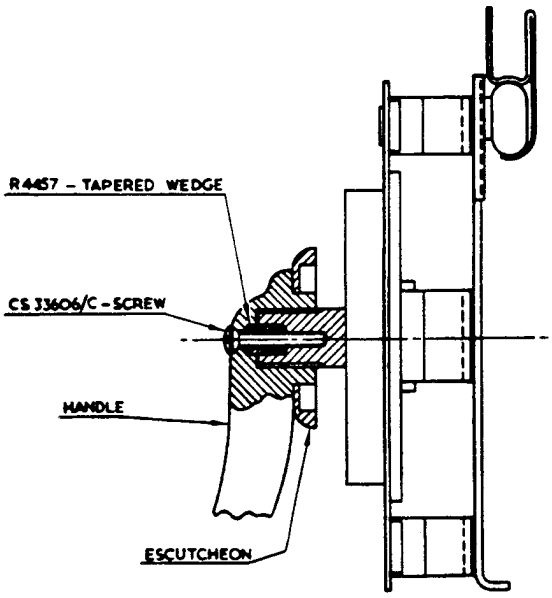

FIG. 1.

FITTING INSTRUCTIONS.

1. Turn the regulator handle to either the fully closed or fully open position.

2. Remove the countersunk-headed setscrew securing the handle to the splined shaft, and then pull off the handle. (N.B. The handle is splined on to the shaft, and it is therefore recommended that its original setting relative to the shaft is suitably noted to ensure identical re-assembly).

3. Fit a sheet of stiff paper or cardboard over the splined shaft as a means of protecting the interior trim of the door against possible damage.

4. Using a hacksaw blade with as narrow a "kerf" as possible, make a vertical cut longitudinally through the shaft to a depth of 0.500" as shown in Fig. 2. Cut a similar slot at right angles to the first cut, and then prise the four segments open to ensure a tight fit between the handle and the splined shaft. (N.B. It is emphasized that this opening out is effected prior to counter-boring the shaft.)

5. Counterbore the end of the splined shaft 0.297" dia. and to a depth of 0.312" as shown in Fig. 2, and then file down the remains of the original boss flush with the face of the shaft.

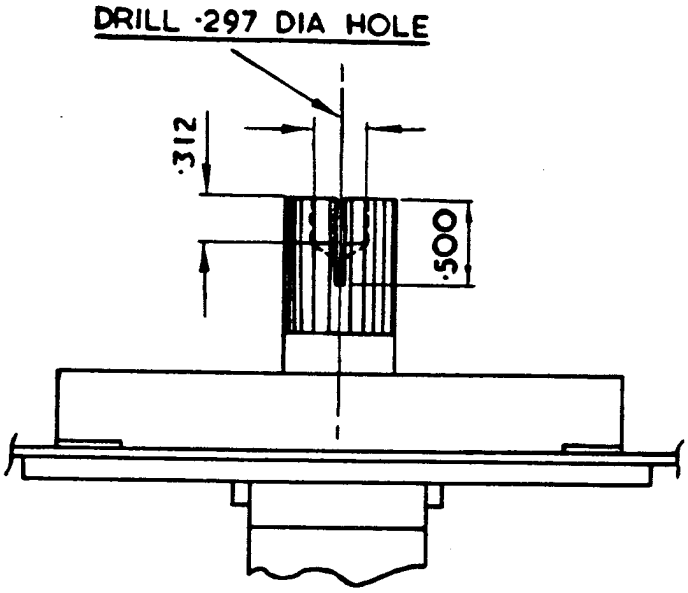

FIG. 2.

6. Fit the tapered plug into the counterbore, pushing this in as far as it will go with the fingers only. Reposition the handle on the shaft in its original relative position and tap fully home, using a rawhide mallet for the purpose. Fit the longer setscrew (CS.33606/C) supplied, and fully tighten this up.

   NOTE:- Should the tapered plug be too long and prevent the handle from nipping the escutcheon plate against the door trim, then it should be suitably shortened.

MATERIAL REQUIRED.

R-4457	Tapered Plug.	1 Off.
CS-33606/C	Setscrew, retaining - Handle to Shaft.	1 Off.

FOR INFORMATION:

WEIGHTS & DIMENSIONS OF COACHBUILT & STANDARD STEEL BODIES

The overall length of the car will vary according to the bumpers fitted, and the figures included in this table for that dimension have been based on the assumption that Wilmot-Breeden bumpers are fitted. In cases where cars are intended for export, bumpers may vary considerably, thus affecting the overall length of the cars.

COACHBUILDER & TYPE OF BODY.	LENGTH.	WIDTH.	HEIGHT.	WEIGHT.(approx:) Tons.	Cwt
Bentley Motors (1931) Ltd. 4 door standard steel sports saloon.	16'0"	5'11"	5'6"	1	17
Park Ward & Co Ltd. drophead foursome coupe.	17'2"	6'0"	5'4"	1	19
Park Ward & Sons Ltd. 2 door sports saloon.	17'2"	6'0"	5'4"	1	19
H.J.Mulliner & Co Ltd. 4 door sports saloon.	17'0"	6'0"	5'3"	1	17
James Young Ltd. 2 door sports saloon.	16'10"	6'0"	5'8"	1	18
James Young Ltd. 4 door sports saloon.	16'10"	6'0"	5'8"	1	18
Hooper & Co.Ltd. 4 door saloon.	16'10"	6'0"	5'5"	1	18
E.D.Abbott Ltd. 2 door drophead coupe.	16'10"	5'9"	5'6"	1	18

FOR INFORMATION:

REVISED METHOD OF FITTING WINDSCREEN GLASS - STANDARD STEEL SALOON.

The attention of Retailers is drawn to the following amendments in the existing instructions covering the fitting of a replacement windscreen glass in service (Section U, Sub-Section BU-3, Bentley Workshop Manual.)

A. "REMOVAL OF WINDSCREEN ASSEMBLY".

Remove the screen assembly as instructed, but DO NOT discard the existing rubber seal unless it has been damaged or shows signs of deterioration due to age.

B. "FITTING OF REPLACEMENT GLASS".

(i) Remove the old glass as instructed. (N.B. Where the original rubber seal is being used again, the inner edge of the seal should be rolled back to expose the heads of the twenty countersunk screws which secure the outer and inner frames together.)

(ii) Prepare the new glass, using ONLY the 1.00" wide strip of "Prestik" (See 5, Fig.15) and then fit the glass into the frame as instructed.

C. "REPLACING THE SCREEN ASSEMBLY".

DO NOT clean out the seal channel, but smear "Seelastik" over the original packing and shoulder of the recess, and then refit the screen assembly to the body as instructed.

NOTE: The original type seal, RB-2512, (Fig.1) has been replaced by the improved design, RB-4880, (Fig.2), which will be supplied in all cases where a new seal is required.

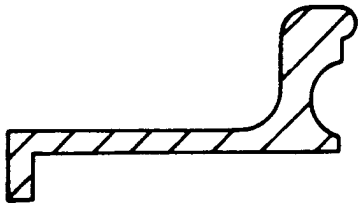

FIG. 1. ORIGINAL TYPE SEAL (OBSOLETE)

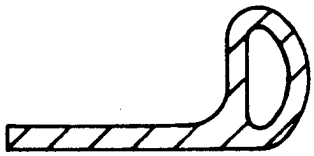

FIG. 2. CURRENT REPLACEMENT.

INSTRUCTIONS FOR RENOVATING FINISH ON INTERIOR WOODWORK.

STANDARD STEEL SALOON.

This Bulletin sets out the recommended procedure and materials for carrying out repairs to slight damage to the interior woodwork of cars.

It is stressed that repairs should be confined to superficial damage restricted to small areas; extensive repairs require that the final coats of synthetic resin woodfinish be subjected to stoving in a special oven under controlled conditions of temperature and humidity.

1. FINISH BLISTERED - FILM REMOVED DOWN TO BARE WOOD:

a) Rub down with Grade 400 Durex Paper, apply one coat of wood primer, and when dry, apply woodfiller over surface, rub off and leave for at least 2 hours. (Preferably overnight)

b) Apply another coat of wood primer, build up with sealer and then face smooth with Grade 400 Durex Paper.

c) Obtain and apply the required shade to match existing colour by mixing burnt umber pigment and french polish.

d) Apply one coat of N/C Glossy woodfinish.

e) Flat with Grade 400 Durex Paper and apply a coat of either "glossy" or "satin" synthetic woodfinish as required. Leave to air-dry for 48 hours.

f) Flat with Grade 500 Durex Paper and drop of Shell Oil A-12, or water containing ½% "Teepol" wetting agent.

g) Finish with Rubbing compound and No.7 or A.1. polish, leaving out the latter for matt finish.

2. WOODWORK PITTED:

a) Stop with Brummer stopper proud of holes. Leave for 2 hrs.

b) Face with Grade Durex Paper, apply thin coat of sealer.

c) Colour to match as in 1 (c).

For Glossy Finish:

d) Apply N/C "glossy" woodfinish.

e) Finish with rubbing compound and polish.

For Matt Finish:

d) Apply another coat of sealer and face.

3. SHALLOW MARK OR SLIGHT DENT:

a) Flat lightly with Grade 500 Durex Paper, coat with sealer to required face.

b) Flat with Grade 400 Durex Paper, apply N/C "glossy" woodfinish and polish off, or leave in sealer for matt.

MATERIALS REQUIRED.

1. RR-9507103 Light Woodfiller.

RR-9507103D Dark Woodfiller.

2. RR-9502109 Wood Primer.

3. RR-9507911 Brummer Stopper.

4. RR-9507122 Sealer.

5. Burnt umber pigment.

6. French Polish (2 ozs. genuine dry bleached lac (wax free) to 1 pint of methylated spirits 66 O.P)

7. RR-L.2543 N/C Glossy Woodfinish.

8. RR-L.2546 Synthetic Woodfinish (satin)

9. RR-L.2545 Synthetic Woodfinish (glossy)

10. RR-L.2542 Accelerator (for use with 8 & 9).

11. RR-9503901 Shell Oil A-12.

12. Durex Paper Grades 400 and 500.

13. RR-9508102 Rubbing compound.

14. RR-9508101 No.7 Polish or RR-950807 A.1. Polish.

15. RR-L.2548 Thinners for Primer, Sealer and Glossy Woodfinish.

16. RR-L.2547 Thinners for Synthetic Woodfinish.

FOR INFORMATION:

ADDITIONAL INTERIOR CAR HEATER

An additional interior heater is available to customers requirements, and may be fitted to either the Standard Steel Saloon or Coachbuilt bodies.

The heater is attached to the dashboard below and behind the radio set and diffuses warm air just above floor level.

Heat is supplied from the engine cooling system and an electric fan, integral with the heater is used for distribution.

For early chassis numbers, (B.2.AK. to B.191.DZ) the heater also includes an improved demister system and the heater itself is provided with a foot operated lid, so that interior heating can be cut off if demisting only is required; the electric fan is operated by a rheostat switch on the facia board.

For later cars, the heater is fitted with an open front and control is also by rheostat.

Prices may be obtained from the London Service Station.

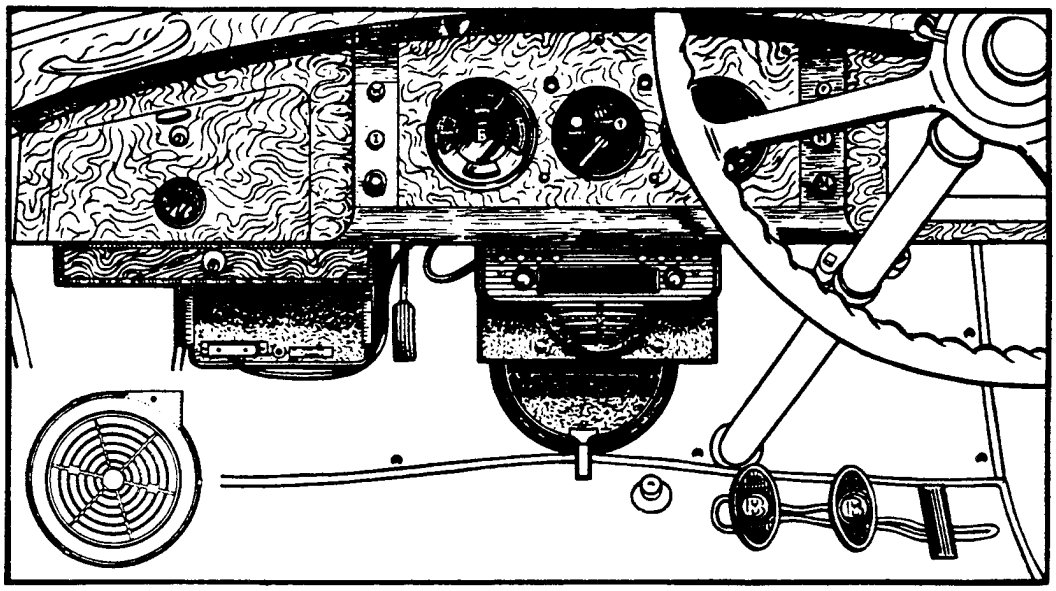

Fig. 1.

Fig. 1. illustrates the heater fitted when demisting is included. The inset shows the open front heater used when supplemented demisting is not required.

INSTALLATION INSTRUCTIONS

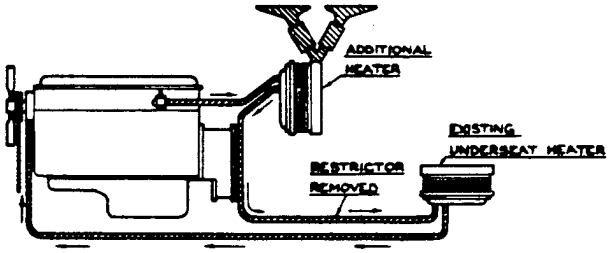

Fig. 2.

Fig. 2. shows the theoretical installation with the demister system shaded.

1. Remove the radio set.

   (On Chassis Nos. B.2.AK. - B.191.DZ, if improved demister is required, also remove the demister motor, air silencers, the heater element in the right-hand demister duct, the wiring to M & F switches and the earth wire from the back of the switchbox.)

2. Disconnect the speedometer trip control from the radio mounting tray and remove the tray.

3. Remove the dashboard carpet and lift the insulating material. Mark off and drill the dashboard in accordance with the following drawings (Figs. 3, 4, 5, 6 and 7) where applicable.

4. Cut a circular recess in the rearward face of the insulation 4.25" dia., by 0.300" deep concentric with the three heater fixing holes and pierce the remaining holes to correspona with those in the dashboard.

5. Cut the carpet to correspond with the recess and other holes in the insulation.

DASHBOARD DRILLING

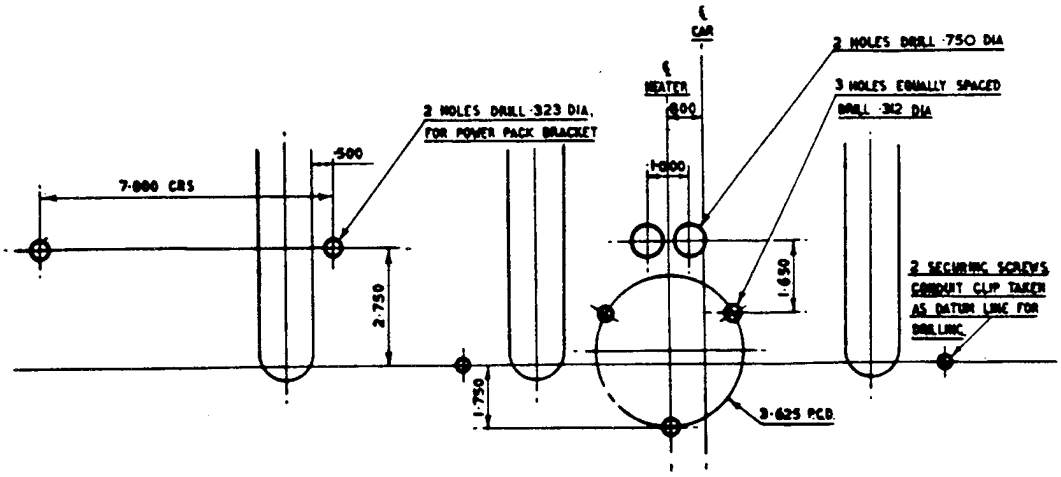

Fig. 3. CHASSIS NOS. B.2.AK - B.271.EW - RIGHT-HAND DRIVE.

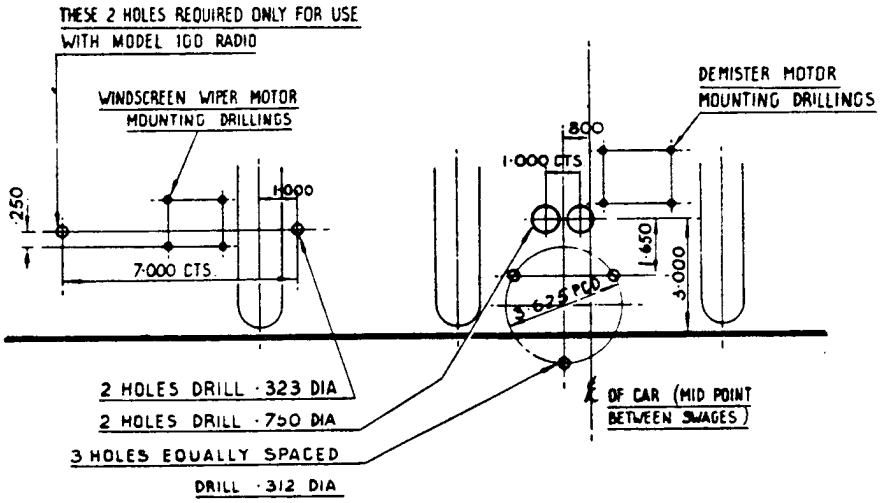

Fig. 4. CHASSIS NO. B.273.EW AND ONWARDS - RIGHT-HAND DRIVE.

DASHBOARD DRILLING.

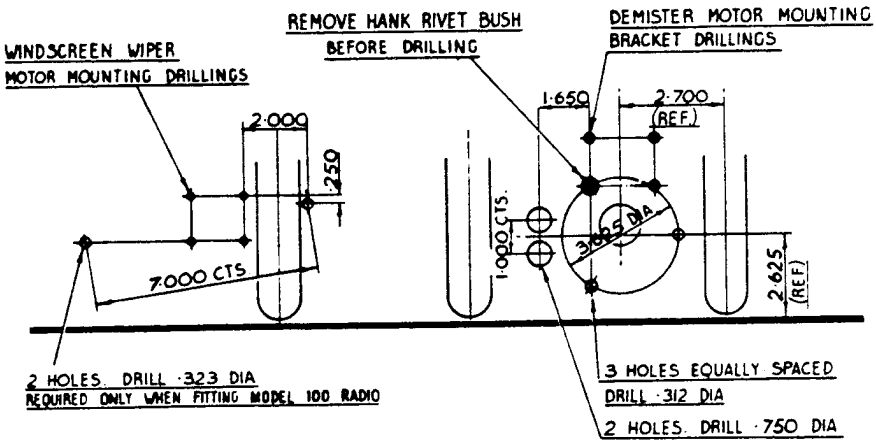

Fig. 5. LEFT-HAND DRIVE CARS.

ADDITIONAL DASHBOARD DRILLING.

Required only when car is fitted with radios other than Model 100.

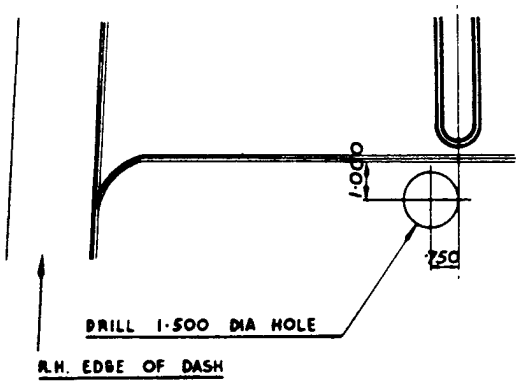

Fig. 6. LEFT-HAND DRIVE CARS.

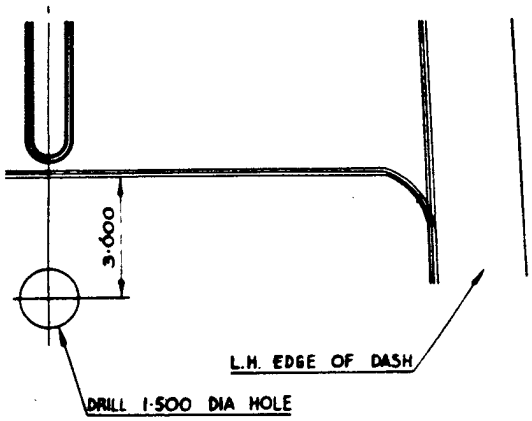

Fig. 7. RIGHT-HAND DRIVE CARS.

INSTALLATION OF HEATER AND WATER CONNECTIONS:

1. Install the heater and secure with nuts on the engine side of the dashboard. The wires should lead out above the dashboard insulation. When a foot-operated heater is fitted, the handle should be vertically downwards and the 'Y' shaped demister adaptor should be in position on the lid.

2. Fit the two rubber elbows to the inlet and outlet pipes of the heater. The rubber flange should pass through the hole and butt against the back of the dashboard so that the elbow acts as a grommet. The clips should be fitted as close to the dashboard as possible to ensure that they are fully on the projecting pipes.

3. It is necessary to cut the existing feed pipe from the cylinder head to the underseat heater and re-arrange it so that it can be reconnected to the dashboard heater. The lower end of this pipe is fitted with a restrictor, sweated in position, to prevent excessive pressure in the heater. This disc must be removed since a restrictor is fitted in the additional piping supplied.

4. Chassis Nos. B.2.AK - B.271.EW - Right-Hand Drive:

   Install the connections as shown in Fig. 9. Remove the one-shot pipe clip situated behind and slightly below the starter solenoid switch, drill out the setscrew hole to ¼" dia. and fit the heater feed pipe clip supplied.

5. Install the connections as shown in Fig. 8 for R.H. drive cars, Chassis Nos. B.273.EW and onwards; inset shows the arrangement for L.H. drive cars.

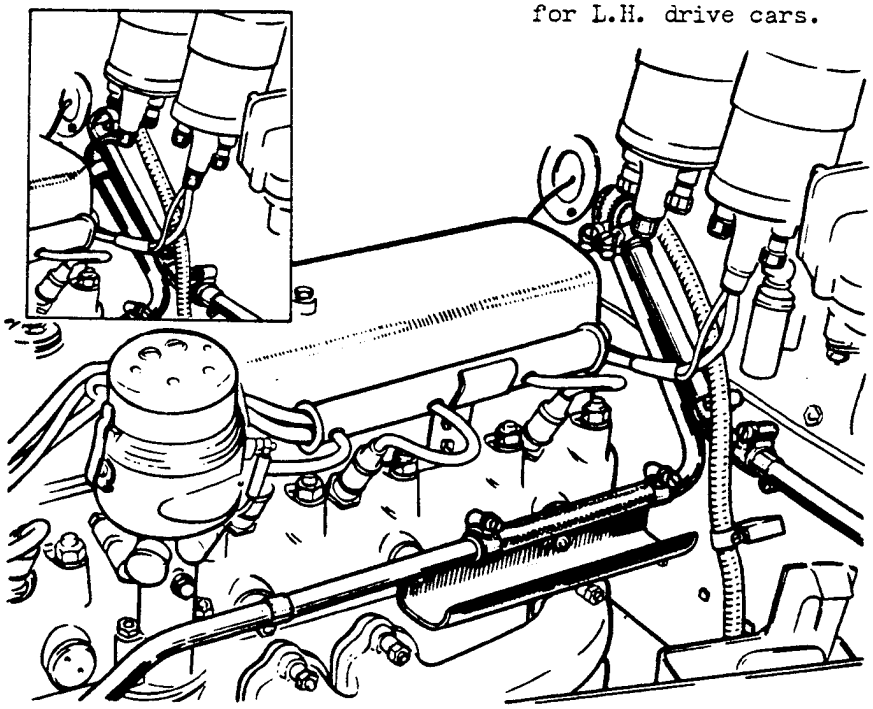

Fig. 8. CHASSIS NOS: B.273.EW AND ONWARDS.

ELECTRICAL CONNECTIONS

1. Remove the instrument panel facia board.

2. Remove the switch marked 'M', enlarge the holes in the instrument panel and facia board and fit the rheostat switch.

3. Chassis No. B.193.DZ and onwards only:

   The switch 'P' now becomes switch 'M'.

4. Fit the pass lamp switch in the centre of the facia board as shown at 'A' in Fig. 10. Drill as indicated if the hole does not already exist. If this position is already occupied, the switch can be fitted behind the steering column as shown in Fig. 11.

5. Connect wiring as shown in Fig. 12.

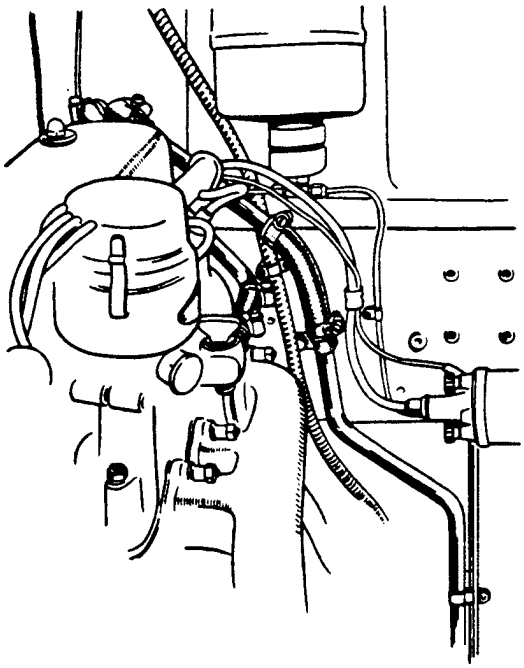

Fig. 9. CHASSIS NOS: B.2.AK - B.271.EW RIGHT-HAND DRIVE.

6. Chassis Nos: B.2.AK - B.191.DZ:

   The wiring diagram is as in Fig. 12, except that as the demister motor has been removed, the feed from No. 6 fuse will connect direct to the underdash heater rheostat.

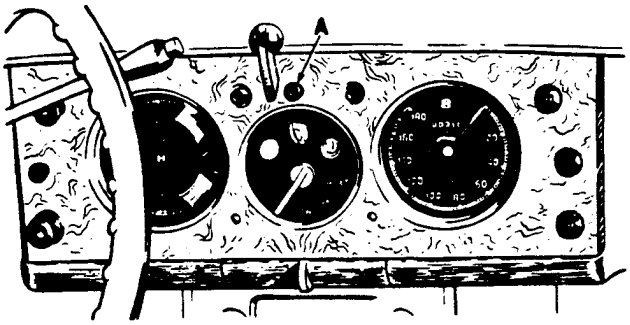

Fig. 10.

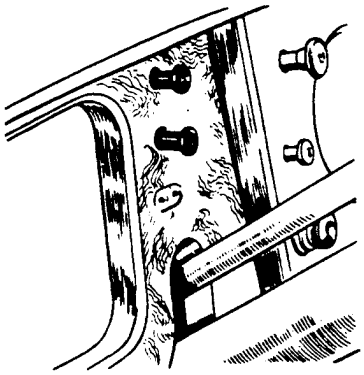

Fig. 11.

MODIFICATION TO RADIO MOUNTINGS:

Cut away the rear of the tray to clear the heater as shown in Fig. 13 and weld on a stiffening rib similar to that already on the tray. Also, drill the ¼" diameter hole for the radio condenser, attach the condenser and refit the tray. Connect the condenser lead to the heater feed wire at the nearest convenient point.

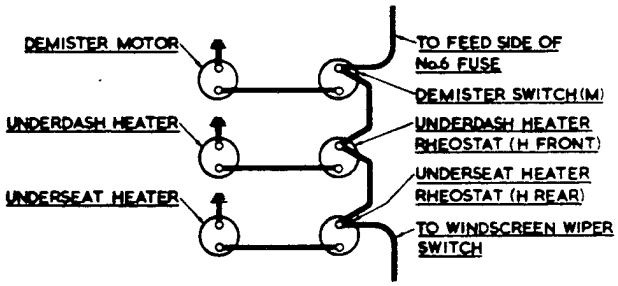

Fig. 12.

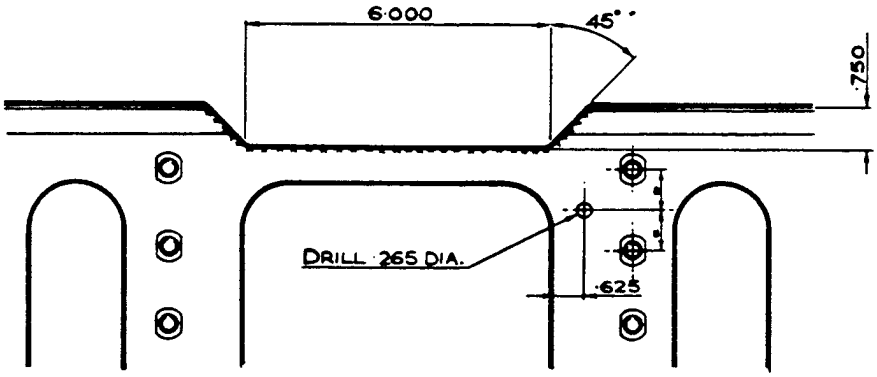

Fig. 13.

1. Model 100 Radio: Right-Hand Drive Cars only:-

   Drill a 5/16" hole in the power pack bracket and fit the bracket to the dashboard with the 5/16" hole to the right as shown in Fig. 14. After tightening the nuts, cut off the excess length of screw.

2. Left-Hand Drive Cars:-

   Fit the bracket to the dashboard, using the two countersunk screws provided. After tightening the nuts, cut off the excess length of screw.

3. Detach the power pack from the radio set by removing the cover and extracting the three screws which hold the pack to the radio. The pack can be levered off carefully with a screw-driver. Replace the power pack cover.

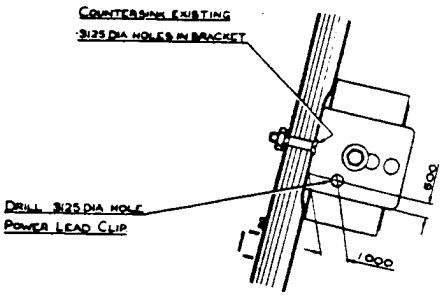

Fig. 14.

4. Place the power pack in the bracket with the lead connections away from the dashboard and towards the outside of the car. Secure with the shouldered retaining bolts. These should be fitted with rubber grommets and be placed in the holes nearest the back of the bracket.

5. Clean the contact face of the connecting lead and the corresponding face on the power pack. Fit the lead and secure with two self-tapping screws.

6. Attach the lead clip to the 5/16" hole drilled in the mounting bracket on R.H. cars, or to a convenient pack ventilation hole in the case of L.H. cars.

7. When the heater's demister off-take is to be utilised, re-connect the air silencers to the demister ducts and connect their free ends to the adaptor on the heater.

RADIO SETS OTHER THAN MODEL 100:

1. Drill the wing valance and fit the power pack and bracket as shown in the appropriate illustrations. (Figs. 15, 16 and 17).

2. Pass the power lead through the hole in the dashboard and connect to power pack and control unit.

NOTE:- Certain radio sets are fitted with a power lead which is connected internally to the control unit and cannot be removed without dismantling the set. In this case, the set should be returned to the London Service Station or to a Radiomobile agent for the longer lead to be fitted. This applies particularly if the set is in guarantee.

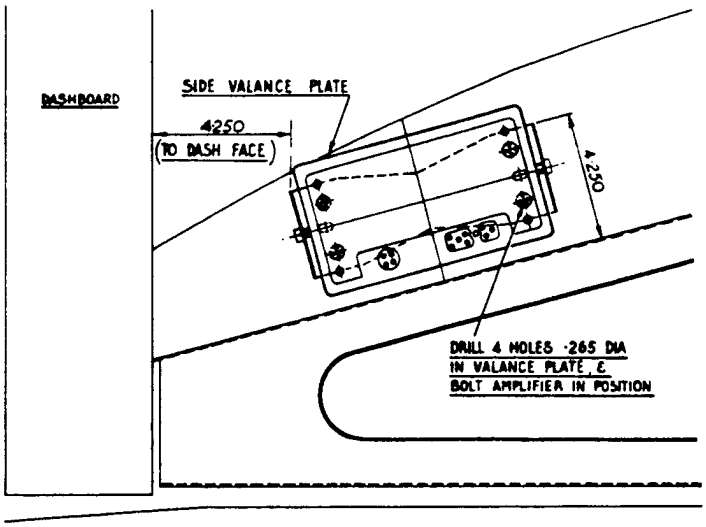

Fig. 15. R.H. CARS.

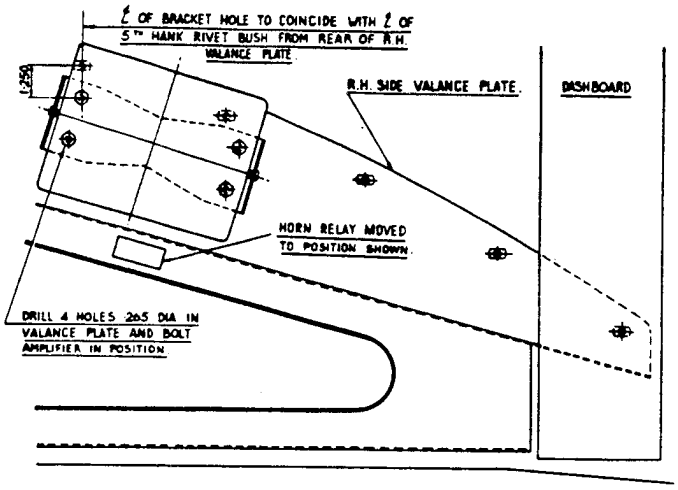

Fig. 16. L.H. CARS.

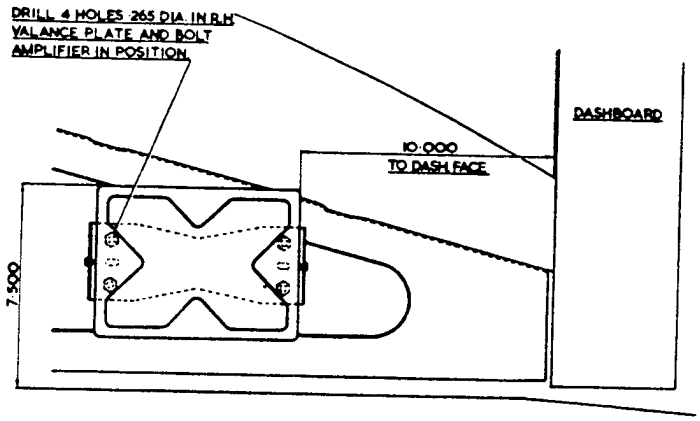

Fig. 17. L.H. CARS FITTED WITH COLD AIR DEMISTER.

COMPLETION OF INSTALLATION:

Refit the Radio.

If there is insufficient clearance between the heater and the radio, the set may be moved forward about $\frac{1}{4}$" by redrilling the fixing flanges, but care must be taken that the appearance of the facia board is not spoilt by having the set too far forward.

Clip the power lead up so that it is well clear of the passenger's or driver's feet.

Fill the coolant system and test the installation for operation and water leaks.

SERVICE REPLACEMENTS

In the event of replacements being required, it will be noted from the List of Parts, that heater components are now available, thus obviating the changing of the whole assembly. This also applies to heaters of earlier patterns.

LIST OF PARTS

(Chassis Nos. B.2.AK - B.191.DZ)

Heater - demister comprising:-

R-4788	Motor Assembly	1 Off
R-4789	Impellor	1 "
R-4786	Cover	1 "
R-4785	Matrix	1 "
R-4398	Clips	3 "
R-4570	Rubber Elbow	2 Off
R-4576	Pipe, Feed	1 "
R-4577	Pipe, Feed	1 "
RE-9418	Clip, Jubilee size 00	8 "
R-4092	Hose	1 "
R-4093	Hose	1 "
RD-5229	Suppressor	1 "
CS-30200	Screw	1 "
K-9008	S/Washer	1 "
K-4008	Nut	1 "
RD-6633	Mounting Bracket, Fog Lamp Switch	1 "
RD-3441	Heater Rheostat	1 Off
R-4546	Heater Rheostat Knob (Front)	1 "
R-4547	Heater Rheostat Knob (Rear)	1 "
R-4071	Split Bracket Assembly	1 Off
R-4073	Lead, Pack/Radio	1 "
R-4141	Screw	2 "
R-4142	Nut	2 "
K-9009	Washer	2 "
RD-3434	Clip, Lead	1 "
RE-6231	Clip, Pipe	1 Off
RE-4745	Clip, Pipe	1 "
K-2019	Screw	1 "
K-9008	S/Washer	2 "
KC-904	Setscrew	1 "
K-4008	Nut	1 "
R-4129	'Y' Piece	1 "
R-4842	Air Hose	1 "
R-4843	Air Hose	1 "

Occasional cars may be encountered with the old pattern long air silencer, or even without silencer. In such cases, the following should be fitted as required:-

RD-4570	Silencer	2 Off
RD-3426	Connector	2 "
RD-4994	Clip, Jubilee No. 2.	2 "

Chassis Nos. B.193.DZ - B.271 EW:

Heater Comprising :-

R-4788	Motor Assembly	1 Off
R-4789	Impellor	1 "
R-4787	Cover	1 "
R-4785	Matrix	1 "
R-4398	Clips	3 "
R-4570	Rubber Elbow	2 Off
R-4576	Pipe, Feed	1 "
R-4577	Pipe, Feed	1 "
RE-9418	Clip, Jubilee Size 00.	8 "
R-4092	Hose	1 "
R-4093	Hose	1 "
RD-5229	Suppressor	1 "
CS-30200	Screw	1 "
K-9008	S/Washer	1 "
K-4008	Nut	1 "
RD-6633	Mounting bracket, Fog Lamp switch	1 "
RD-3441	Heater Rheostat	1 Off
R-4546	Heater Rheostat Knob (Front)	1 "
R-4547	Heater Rheostat Knob (Rear)	1 "
R-4071	Split Bracket Assembly	1 Off
R-4073	Lead, Pack/Radio	1 "
R-4141	Screw	2 "
R-4142	Nut	2 "
K-9009	Washer	2 "
RD-3434	Clip, Lead	1 "
RE-6231	Clip, Pipe	1 Off
RE-4745	Clip, Pipe	1 "
K-2019	Screw	1 "
K-9008	S/Washer	2 "
KC-904	Setscrew	1 "
K-4008	Nut	2 "

Chassis Nos. B.273 EW onwards:

Heater Comprising :-

R-4788	Motor Assembly	1 Off
R-4789	Impellor	1 "
R-4787	Cover	1 "
R-4785	Matrix	1 "
R-4398	Clips	3 "

	R-4570	Rubber Elbow	2 Off
	R-4576	Pipe, Feed	1 "
	R-4577	Pipe, Feed	1 "
	RE-9418	Clip, Jubilee Size 00.	6 "
	R-4092	Hose	1 "
	R-4093	Hose	1 "
	RD-5229	Suppressor	1 "
	CS-30200	Screw	1 "
	K-9008	S/Washer	1 "
	K-4008	Nut	1 "
	RD-6633	Mounting Bracket, Fog Lamp Switch	1 "
	RD-6694	Heater Switch (3 Positions)	1 Off
A	R-4807	Knob Heater Switch (Front)	1 "
	R-4808	Knob Heater Switch (Rear)	1 "
	RD-3441	Heater Switch (Rheostat)	1 Off
B	R-4546	Knob Heater Switch (Front)	1 "
	R-4547	Knob Heater Switch (Rear)	1 "

A. Used on all cars fitted with 3 Position Heater Switch.
B. Used on all cars fitted with Rheostat Heater Switch.

Additional material required only when car is fitted with Model 100 Radio:-

R-4071	Split Bracket Assembly	1 Off
R-4073	Lead Pack/Radio	1 "
R-4141	Screw	2 "
R-4142	Nut	2 "
K-9009	Washer	2 "
RD-3434	Lead Clip	1 "

Material required when car is fitted with Radios other than Model 100:-

R-4858	Mounting Bracket, Amplifier Unit	1 Off
K-2010	Screw	4 "
K-9008	S/Washer	4 "
K-4008	Nut	4 "
R-4791	Shield, Amplifier	1 "
CS-31020	Screw	4 "

FOR INFORMATION

'BIRMABRIGHT' ALUMINIUM ALLOY

The Bentley 'R' Type boot lid is manufactured from Birmal Sheet BB-3, a light, non-corrosive, aluminium alloy containing magnesium. This Bulletin gives information of the recommended procedure for welding and filling where repairs are necessary due to accidental damage.

In general, small welds and fillings may be carried out as described with excellent results but prolonged heating is apt to cause surface distortions which cannot be satisfactory beaten out. Where damage is at all extensive a new boot lid should be fitted.

Material Required

Welding Rod	Birmabright No.2
Flux	'Welding Flux for Aluminium and its Alloys'
Filler	Birmetal Filzall
Lubricant	Aluminium Powder.

These materials are available from Messrs. Birmabright Ltd., Woodgate Works, Quinton, Birmingham, 32.

Messrs Birmabright Ltd., are also offering a complete kit containing a good supply of all necessary consumable materials, a S.I.F. Welding Torch, three wooden paddles and an electrically heated paddle. The Kit is packed in an anodised case for carriage and storage. Retailers interested are asked to write direct for a quotation. All items can, of course, be purchased separately.

WELDING:

The welding procedure closely follows that for pure aluminium but the welding rod specified must be used. The 'leftwards' technique should be employed and, after initial tacking, the weld should be completed in one run as quickly as possible.

(i) Strip the paint as necessary with cellulose stripper. Thoroughly clean the edges to be welded with wire wool for a width of not less than ½" on both surfaces of the metal.

(ii) Mix a small quantity of the flux with water to a smooth paste and brush it on to the cleaned edges on both sides of the metal. Clean the welding rod with wire wool and brush it over with flux paste.

(iii) Using a No.2 nozzle on British Oxygen Company or S.I.F. Torches, or its equivalent on other torches, adjust the flame so that it is slightly reducing; that is, it has a slight excess of acetylene. The flame should be smooth and quiet.

(iv) Tack weld at intervals of 2" to 4" (50 to 100 mm) and then complete the weld in one run working from right to left. Allow to cool naturally. Do not quench.

(v) When cool, wash off any surplus flux with hot water and a scrubbing brush. This is essential owing to the strongly corrosive nature of the flux used.

(vi) Dress with a Dreadnought file and spray paint in the usual way.

FILLING

'Birmetal Filzall' is a thermal plastic resin of 75% aluminium powder and 25% synthetic resin and has a melting point of approximately 120°C. It is applied in a similar way to normal metallic solders and little heat is required. If an oxyacetylene flame is used it should be neutral and soft and only the tip of the outer flame should contact the metal.

(i) Remove the paint as necessary with cellulose stripper.

(ii) Thoroughly clean the surface with coarse sand-paper. This provides a rough surface to which the filler can adhere. Cleaning with a wire brush is insufficient.

(iii) Apply a thin coat of filler over the whole working surface. To ensure good adhesion, heat the surface and allow the Filzall stick to melt in contact with the surface. Do not play the flame direct onto the stick.

(iv) Build up the surface as necessary with filler playing the flame over the coated area and on the end of the stick as necessary. Overheating will cause the filler to turn brown and will produce holes in the finished surface.

(v) Level off the filler with wooden paddles rubbing the paddles in aluminium powder to prevent the filler from sticking to them.

(vi) When cold, feather off with a 'Dreadnought' file and rub down in the usual way. If a sanding disc is employed, use the reverse face of the disc and apply light pressure with the edge of the disc to create a glaze by friction.

(vii) Repainting

The first two priming coats should be applied as mist coats with the minimum of thinners. The filler softens in contact with cellulose thinners, but will harden off as the thinners evaporates. The use of stopper is not recommended but if necessary it should be applied as stiff as possible.

After two mist coats continue spraying in the usual way.

The electrical paddle supplied by Messrs Birnabright Ltd., enables a filling to be made without the use of a flame and requires no aluminium powder as a lubricant. A smooth surface can be obtained that requires little hand dressing before painting.

FOR INFORMATION:

STOWAGE OF SUITCASES.

Retailers are advised that some owners have found difficulty in correctly stowing the special Bentley supplied suitcases.

For information, the correct sequence is given below, and retailers are asked to advise and demonstrate to all purchasers on delivery.

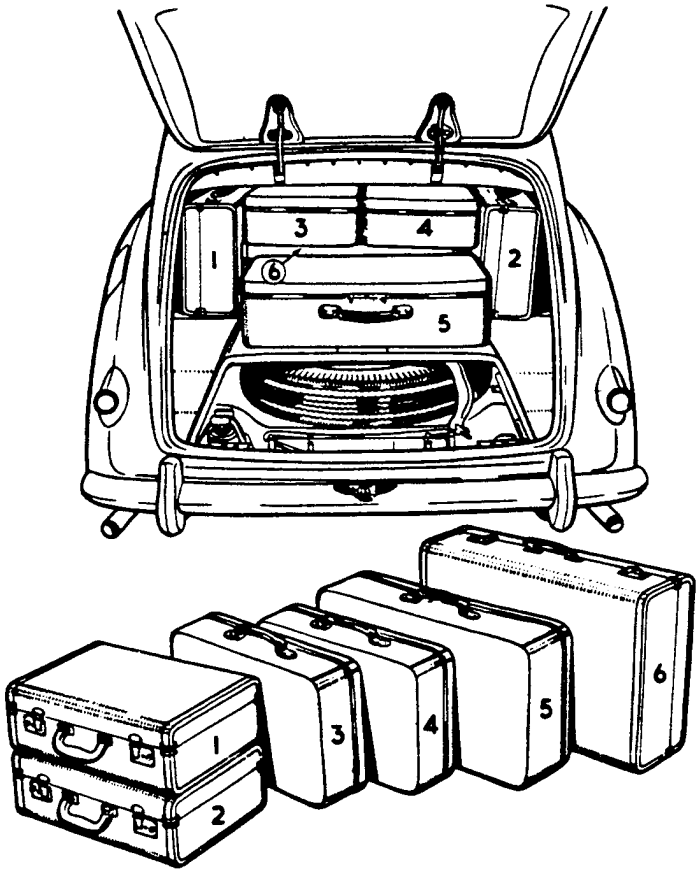

ILLUSTRATING CORRECT METHOD OF STOWAGE.

The largest suitcase, No.6, must be placed centrally and as far back as possible into the boot, the smaller cases, 1 and 2, are then packed at each side of No.6. Nos. 3 and 4 should then be laid on top of No.6 and, finally, the second largest case, No.5, placed in position to fit snugly between No.6 and the boot lid.

FOR INFORMATION.

BENTLEY CONTINENTAL SALOON.
REMOVAL AND REPLACEMENT OF WINDSCREENS.
METAL FRAME TYPE - CURVED GLASS.

In order to faciliate the above, the coachbuilders have prepared the following instructions.

To Remove.

1. Remove the driving mirror and the two sun vizors.

2. Remove the two top metal fillets.

3. Remove the two nuts visible under the outer side of the shelf below the instrument board, and the two raised headed screws below the inner side of the shelf. The shelf can then be removed complete with cubby hole door.

4. Remove the polished wood face panel below the centre of the instrument board, secured by screws at the back of the pahel.

5. Remove the two metal thread screws from the bracket at each end of the instrument board, and the four screws from the polished lower screen rail.

6. Disconnect the positive battery terminal to ensure against shorting a live wire while easing back the instrument board later.

7. Disconnect the speedometer, tachometer, charging socket and the screen washer from behind the instrument board.

8. Ease back the instrument board and screen rail, giving access to the five securing screws at the bottom of the screen.

9. Remove the screws from the metal fillets on each side of the screen. These fillets may be left in position.

10. Detach the head lining from the front of the roof behind the top of the screen giving access to the fixing brackets. Remove the five screws from these brackets and five from the blocks at the bottom of the screen.

11. Remove the screen from the body.

12. To remove the radio, remove the two securing bolts on either side of the radio, when the receiver and brackets can be dismantled.

To Replace the Glass.

It should be noted when replacing the glass that it must be sealed in the frame by means of "Prestik" sealing tape led round the edge of the glass. The glass should then be put into the metal frame and the screen refitted to the body, the surplus "Prestik" then pushed gently into the frame so that it is completely sealed.

When the "Prestik" has been pressed into the frame all the way round the glass, any surplus edges should be carefully cut off with a sharp knife, taking care not to scratch the glass. The dismantled parts can then be replaced in the reverse order of dismantling.

FOR INFORMATION.

CARAVAN OR TRAILER TOWING ATTACHMENT.

A Caravan or Trailer towing attachment approved by Rolls-Royce Limited and Bentley Motors (1931) Limited, is available for all cars fitted with standard steel saloon bodies.

Illustrations and details of price are obtainable from Messrs. B. Dixon-Bate Limited, of Bridge Works, Chester.

This attachment has been so designed that visible parts can be removed when not required, so that the appearance of the car can be restored to normal.

FOR INFORMATION

TRICO WINDSCREEN WASHER CONTROL VALVE

Prior to July 1956, the windscreen washer control valve, Part No. R.4120, was fitted with a valve seat giving metal to metal contact. Trouble was experienced with this control valve owing to the metal to metal seating having a tendency to leak, causing poor engine idling. To overcome this problem, the design was changed to incorporate a valve seat of natural rubber.

Further trouble was encountered in the form of intermittent or complete failure of the control valve to operate the windscreen washer. This failure was caused through damage of the natural rubber seat on the sharp edge of the valve seating. Accordingly, in February this year, the design of the control valve was changed to incorporate a Neoprene seat in place of natural rubber. To identify the modified control valve, it was marked with a spot of green paint on the side of the valve housing.

To date, this change has proved entirely satisfactory and it has been decided that this control valve will be supplied for all replacements. All control valves supplied will now have the Neoprene seat but they will not necessarily have the green identification mark.